GREEN SCHOOL GUIDE

DESIGN SUBMISSION - 100%

P.S. 320X - NEW BUILDING

1570 BOONE AVENUE
BRONX, NEW YORK 10460

November 16, 2018
April 22, 2019 - RESUBMISSION
LLW No. 107404

NYC School Construction Authority
Architecture & Engineering

30-30 Thomson Avenue
Long Island City, NY 11101
718.472.8000

Prepared by:

di Domenico + Partners
Architecture | Landscape Architecture | Urban Design

3743 Crescent Street,
Third Floor
Long Island City, NY 11101
212.337.0400
212.337.3567 FAX
info@ddp-ny.com
www.ddp-ny.com

This page intentionally left blank.

Table of Contents

April 22, 2018

PS 320X: New Primary School

1. GSG Committee Comments Dated September 18, 2018....1
2. Project Check List....9
3. Credit Narrative 11
4. Supporting Documents 73
   - S1.2R – Site Selection – NYS Environmental Letter....75
   - S1.2R – Site Selection – NYS Environmental Resource Mapper....76
   - S1.2R – Site Selection – FEMA Flood Hazard Resources Map....77
   - S1.2R – Site Selection – Federally Listed Endangered Species List 78
   - S1.3R – Sustainable Site Building Layout – Analysis 1 79
   - S1.3R – Sustainable Site Building Layout: Analysis 2/3 – Shadow Plot Plans – June....80
   - S1.3R – Sustainable Site Building Layout: Analysis 2/3 – Shadow Plot Plans - September....81
   - S1.3R – Sustainable Site Building Layout: Analysis 2/3 – Shadow Plot Plans – December....82
   - S1.3R – Sustainable Site Building Layout: Analysis 4 – Wind Analyses 83
   - S1.4 – Development Density & Community Connectivity 84
   - S1.4 – Development Density & Community Connectivity – Oasis Map 85
   - S1.5R – Joint Use of Facilities, Community Access 86
   - S1.6P – Environmental Site Assessment....87
   - S2.1 – Alternative Transportation, Public Transportation Access 95
   - S3.1/S3.2 Site Development 96
   - E 4.1P – Minimum Energy Performance Lighting Density Diagrams 97
   - Q 1.1P – Minimum IAQ Performance, ASHRAE Outdoor Air Assessment Report 105
   - Q 5.1 Controllability of Systems, Lighting 109
   - Q 7.4 – Daylight & Views, Views....117
   - Q8.1P/Q8.2/Q8.3 – Acoustical Report....121
   - Q8.1P/Q8.2/Q8.3–Acoustical Compliance Letter 130
   - Mechanical Load Calculations, Major Equipment Cut Sheet – 100% 133
   - Selected Mechanical Drawings....241
   - Specification Table of Contents and the list of drawings - 100% 261

5. Energy Model Report (Under Separate Cover).... 285
   - Energy Model Report 287
   - eQuest Model Review Checklist Level 1....303
   - eQuest Model Review Checklist Level 2....307
   - eQuest input-output GSG Baseline....315
   - eQuest input-output LL86 Baseline 355
   - eQuest input-output Proposed 391

This page intentionally left blank.

INTENTIONALLY LEFT BLANK

INTENTIONALLY LEFT BLANK

INTENTIONALLY LEFT BLANK

This page intentionally left blank.

Project Checklist - page 1 of 2

SCA School Construction Authority
NYC Green Schools Rating System 2016

Project:	320X - New Building		Submission (Check one):	SD	DD	60%	100%	Const
Address | Zip Code:	1570 Boone Ave, Bronx, NY	10460					X	
LLW #:	107404		Submission Date:	April 22, 2019				
Design #:	N/A		Reviewer :					
Architect:	di Domenico + Partners		Reviewer Sign Off:					

Credit Names	BD&C Reference LEED for Schools 2009	CHPS Reference	NYC GSG 2016	Credit Description and Relevant Information and Drop-Down Menus	RPC (check project zipcode in GSG) [5]	Required For all Projects	Required if Feasible [1]	Optional Credits [2]	If Anticipated, or if Documented: [3] Enter point value, or leave blank if Not Feasible or if Not Pursued: Design Phase	Construction Phase	Auto Filled: Blank if Pursued, No. of Points if Not Pursued or if Not Feasible or Additional Credit Not Pursued
Site			**25% of Total Points**					**Points:**	**15**	**out of 19**	
Site Selection	SS Pr 1		S 1.1P	**Construction Activity Pollution Prevention**		NP	☑ YES		Credit Req'd - Confirm Pursuit		
	SS 1		S 1.2R	**Site Selection**		1			1		
		1.1.7	S 1.3R	**Sustainable Site & Building Layout**		NP	☑ YES		Indicate Pursuit		☐ NO
	SS 2		S 1.4	**Development Density & Community Connectivity**	RPC		4		4		
	SS 10	1.1.2	S 1.5R	**Joint Use of Facilities, Community Access**		1			1		
	SS Pr 2		S 1.6P	**Environmental Site Assessment**		NP	☑ YES		Credit Req'd - Confirm Pursuit		
	SS 3		S 1.7	**Brownfield Redevelopment**			1			NF	1
Transportation	SS 4.1		S 2.1	**Alternative Transportation,** Public Transportation Access	RPC		4		4		
	SS 4.2		S 2.2	**Alternative Transportation,** Bicycle Storage & Changing Rooms			1		1		
	SS 4.3/4.4		S 2.3R	**Alternative Transportation,** Fuel-Efficient Vehicles/Parking Cap.		2			2		
Minimize Impact on Site	SS 5.1		S 3.1	**Site Development,** Protect or Restore Habitat	RPC		1			NF	1
	SS 5.2		S 3.2	**Site Development,** Maximize Open Space			1		1		
Stormwater Design	SS 6.2		S 4.1	**Stormwater Design,** Quality Control			1		NF		1
Heat Island Effect	SS 7.2		S 5.1R	**Heat Island Effect,** Roof		1			1		
Outdoor Lighting	SS 8		S 6.1	**Light Pollution Reduction**			1		NF		1
				Site Category Sub-Total:		5	14		15	0	4
Water			**10% of Total Points**					**Points:**	**6**	**out of 8**	
Outdoor Systems	WE 1.1		W 1.1	**Water Efficient Landscaping**, Reduce by 50%			2		2		
	WE 1.1		W 1.2	**Water Efficient Landscaping**, Reduce by 100%			2		2		
Indoor Systems	WE Pr 1		W 2.1P	**Minimum Water Use Reduction**, 20% Reduction		NP	☑ YES		Credit Req'd - Confirm Pursuit		
	WE 3		W 2.2R	**Enhanced Water Use Reduction**, 30% Reduction		2			2		
	WE 3		W 2.3	**Enhanced Water Use Reduction**, 35% Reduction			1		NF		1
	WE 3		W 2.4	**Enhanced Water Use Reduction**, 40% Reduction			1		NF		1
				Water Category Sub-Total:		2	6		6		2
Energy			**8% of Total Points**					**Points:**	**5**	**5**	
Commissioning	EA Pr 1		E 1.1P	**Fundamental Commissioning**		NP	☑ YES		Credit Req'd - Confirm Pursuit		
Refrigerant Management	EA Pr 3		E 2.1P	**Fundamental Refrigerant Management**		NP	☑ YES		Credit Req'd - Confirm Pursuit		
	EA 4		E 2.2	**Enhanced Refrigerant Management**			2		2		
Verification	EA 5		E 3.1R	**Measurement & Verification**		1				1	
		3.3.5	E 3.2R	**Energy Management System Controls,** HVAC & H. W. Systems		NP	☑ YES		Indicate Pursuit		☐ NO
Energy Efficiency	EA Pr 2		E 4.1P	**Minimum Energy Performance**		NP	☑ YES		Credit Req'd - Confirm Pursuit		
		3.1.2	E 4.2R	**HVAC System Sizing,** Avoid Oversizing		NP	☑ YES		Indicate Pursuit		☐ NO
Power	EA 6		E 5.1R	**Green Power**		2				2	
				Energy Category Sub-Total:		3	2		2	3	0
Materials			**12% of Total Points**					**Points:**	**7**	**out of 10**	
Efficient Material Use	MR Pr 1		M 1.1P	**Storage & Collection of Recyclables**		NP	☑ YES		Credit Req'd-Confirm Pursuit		
	MR 1.1		M 1.2	**Building Reuse**, Maintain 75% of Existing Walls, Floors & Roof	RPC		1			NF	1
	MR 1.1		M 1.3	**Building Reuse**, Maintain 95% of Existing Walls, Floors & Roof			1			NF	1
	MR 1.2		M 1.4	**Building Reuse**, Maintain 50% of Interior Non-Structural Elements			1			NF	1
	MR 2		M 1.5R	**Construction Waste Management**, Divert 50% from Disposal		1				1	
	MR 2		M 1.6R	**Construction Waste Management**, Divert 75% from Disposal		1				1	
	MR 2		M 1.7	**Construction Waste Management**, Divert 95% from Disposal			1			1	
Sustainable Materials	MR 4		M 2.1R	**Recycled Content**, 10% (post-consumer + ½ pre-consumer)		1				1	
	MR 4		M 2.2	**Recycled Content**, 20% (post-consumer + ½ pre-consumer)			1			1	
	MR 5		M 2.3	**Regional Materials**, 10% Extracted, Processed & Manufactured			1			1	
	MR 5		M 2.4	**Regional Materials**, 20% Extracted, Processed & Manufactured			1			1	
		4.1.1	M 2.5R	**Wallboard & Roof Deck Products,** Mold Resistance		NP	☑ YES		Indicate Pursuit		☐ NO
				Materials Category Sub-Total:		3	7			7	3

See Notes on Page 2 of 2

Project Checklist - page 2 of 2

SCA School Construction Authority

NYC Green Schools Rating System 2016

Project:	320X - New Building	Submission (Check one):	SD: ; DD: ; 60%: ; 100%: X ; Const:
Address | Zip Code:	1570 Boone Ave, Bronx, NY | 10460	Submission Date:	April 22, 2019
LLW #:	107404		
Design #:	N/A	Reviewer :	
Architect:	di Domenico + Partners	Reviewer Sign Off:	

Credit Names	BD&C Reference LEED for Schools 2009	CHPS Reference	NYC GSG 2009	Credit Description and Relevant Information and Drop-Down Menus	RPC (check project zipcode in GSG) [5]	Required For all Projects	Required if Feasible [1]	Optional Credits [2]	If Anticipated, or if Documented: 3 Enter point value, or leave blank if Not Feasible or if Not Pursued: Design Phase	Construction Phase	Auto Filled: Blank if Pursued, No. of Points if Not Pursued or if Not Feasible or Additional Credit Not Pursued
Indoor Environmental Quality			**23% of Total Points**					**Points:**	**14**	**out of 16**	
IAQ Post-occupancy	IEQ Pr 1		Q 1.1P	**Minimum IAQ Performance**		NP	☑ YES		Credit Req'd - Confirm Pursuit		
	IEQ 1		Q 1.2R	**Air Flow Stations,** Outside Air Intakes		1			1		
IAQ Pre-occupancy	IEQ 3.1		Q 2.1R	**Construction IAQ Management Plan**, During Construction		1				1	
	IEQ 3.2		Q 2.2R	**Construction IAQ Management Plan,** Before Occupancy		1				1	
Low-Emitting Materials	IEQ 4.1		Q 3.1R	**Low-Emitting Materials**, Adhesives & Sealants [4]		1				1	
	IEQ 4.2		Q 3.2R	**Low-Emitting Materials**, Paints & Coatings [4]		1				1	
	IEQ 4.3		Q 3.3R	**Low-Emitting Materials**, Flooring Systems [4]		1				1	
	IEQ 4.4		Q 3.4R	**Low-Emitting Materials**, Comp Wood & Agrifiber Products [4]		1				1	
Pollution Source Control	IEQ 5		Q 4.1R	**Indoor Chemical & Pollutant Source Control**		1			1		
		5.3.5	Q 4.2R	**Electric Ignition Stoves**		NP	☑ YES		Indicate Pursuit		☐ NO
		6.2.4	Q 4.3R	**Post Construction Indoor Air Quality**		NP	☑ YES		Indicate Pursuit		☐ NO
Controllability of Systems	IEQ 6.1		Q 5.1R	**Controllability of Systems**, Lighting		1			1		
	IEQ 6.2		Q 5.2R	**Controllability of Systems**, Thermal Comfort		1			1		
Thermal Comfort	IEQ 7.1		Q 6.1R	**Thermal Comfort**, Design		1			1		
Lighting and Views	IEQ 8.1		Q 7.1	**Daylight & Views**, Daylight 75% of Classrooms			1		1		
	IEQ 8.1		Q 7.2	**Daylight & Views**, Daylight for 90% of Classrooms			1		NF		1
	IEQ 8.1		Q 7.3	**Daylight & Views**, Daylight for 75% of Other Spaces			1		NF		1
	IEQ 8.2		Q 7.4	**Daylight & Views**, Views			1		1		
		5.2.1	Q 7.5R	**Visual Performance,** Artificial Direct-Indirect Lighting		NP	☑ YES		Indicate Pursuit		☐ NO
Acoustics	IEQ Pr 3	5.5.1	Q 8.1P	**Minimum Acoustical Performance**		NP	☑ YES		Credit Req'd - Confirm Pursuit		
	IEQ 9		Q 8.2	**Enhanced Acoustical Performance** & Sound for Special Spaces			1		1		
		SCA	Q 8.3R	**Acoustic Windows**		NP	☐ YES		Indicate Pursuit		☑ NO
				IEQ Category Sub-Total:		11	5		8	6	2
Regional			**0% of Total Points**	Use pull-down menus ↘	RPC Claimed			**Points:**	**0**	**out of 4**	
Regionally Appropriate [5]	RP 1.1		R 1.1	**Regionally Defined Credit Achieved**	S 3.1-site dev, protect		1		0		
	RP 1.2		R 1.2	**Regionally Defined Credit Achieved**	A 3.1 (NF/SCA)		1		0		0
	RP 1.3		R 1.3	**Regionally Defined Credit Achieved**	WEc2 (NF/SCA)		1		0		0
	RP 1.4		R 1.4	**Regionally Defined Credit Achieved**	Blank		1				1
				Regional Category Sub-Total:		0	4	0	0		1
Additional Credits			**22% of Total Points**	For A 3.1 Use pull-down menu ↓				**Points:**	**13**	**out of 33**	
Innovation in Design	ID 2		A 1.1R	**LEED® Accredited Professional**		1			1		
	ID 1		A 1.2	**Innovation or Exemplory Performance**				1			1
	ID 1		A 1.3	**Innovation or Exemplory Performance**				1			1
Optional - Site Impact	SS 7.1		A 2.1	**Heat Island Effect,** Non-Roof				1			1
	SS 6.1		A 2.2	**Stormwater Design**, Quantity Control	RPC			1			1
	ID 1		A.2.3	**Active Design in a School Environment**				1			1
Optional - Energy	EA 3		A 3.1	**Enhanced Commissioning**				2		NF	2
	EA 1		A 3.2	**Optimize Energy Performance** [6]	New 22%, Renovation 20%, 12 pts			16	12		4
	EA 2		A 3.3	**On-Site Renewable Energy**	If NOT Approved, 0 pts			7			7
		3.3.5	A 3.4	**Enhanced Energy Management System Controls,** HVAC & H.W.		NP	☐ YES		Indicate Pursuit		☑ NO
Optional - IEQ	IEQ 4.6		A 4.1	**Low-Emitting Materials,** Ceiling and Wall Systems [4]				1			1
Optional - Education	ID 3		A 5.1	**The School Building as a Teaching Tool**				1			1
				Additional Credit Category Sub-Total:		1		32	13	0	20
					Column Totals:	25	38	32	44	16	32
					LEED® Equivalent Point Total[7]:				60	out of	95

SCA Credit Name :
- Letter prefix indicates credit section (S, W, E, M, Q, R, A)
- First number indicates the category within the section
- Second number indicates the specific credit within the section category
- Suffix "P" is added for credits that are LEED® prerequisites and therefore required of all projects
- Suffix "R" is added for credits that are required of all projects

1 Projects required to achieve all "feasible" credits that are possible for a particular project.
2 Projects may only pursue optional "Additional" section credits with permission from SCA unless otherwise noted.
3 During GSG submission phases, enter anticipated design and construction credits, keeping the Checklist current.
4 A maximum total value of four (4) points is allowed between these six low-emitting material credits (Q3.1, 3.2, 3.3, 3.4; A4.1)
5 RPC incentive regional credits as indicated. If the referenced credit is achieved, then the associated RPC can be claimed.
6 This credit requires project-specific energy modeling and can not be achieved by use of proto-typical modeling.
7 LL86/05 requires Certified LEED® 2009 for Schools or equivalent of a no-less stringent rating system - Minimum 40-49 Points

NP: To be consistent with LEED®, the NYC GSG assigns no point value to prerequisites or non-LEED® credits.
NYC GSG: Requires that all credits be attempted and proof through calcuation for those which are not-feasible.

School Construction Authority

NYC Green Schools Rating System 2016

Credit Compliance Narratives

Project: PS 320X –New Building
Address: 1570 Boone Ave., Bronx, NY 10460
LLW #: 107404
Design #: N/A

Date: April 22, 2019
Architect: di Domenico + Partners, LLP
Submission: 100% Resubmission
Reviewer:_____
Reviewer Sign Off:_____

Site Credits

Site Selection

S 1.1P Construction Activity Pollution Prevention

This credit is *required and feasible*. The **total site area is 14,770 SF**, which is less than an acre, an Erosion and Sediment Control has been created to satisfy the requirements of the SCA's NYC Green Schools Guide 2016. SPDES application is not required as site area is less than 1 acre. Project site will have a combined storm and sewer connection.

During the construction, the contractors will be responsible for maintaining the erosion and sediment control measures. This would include catch basins and sediment control. See **C110 – SOIL EROSION AND SEDIMENT CONTROL PLAN on the following page and in the supporting documents.**

Applicable SCA Design Requirements:
None

Applicable SCA Standard Specifications:

S01352	Sustainability
S01900	Existing Premises Work
02200	Earthwork

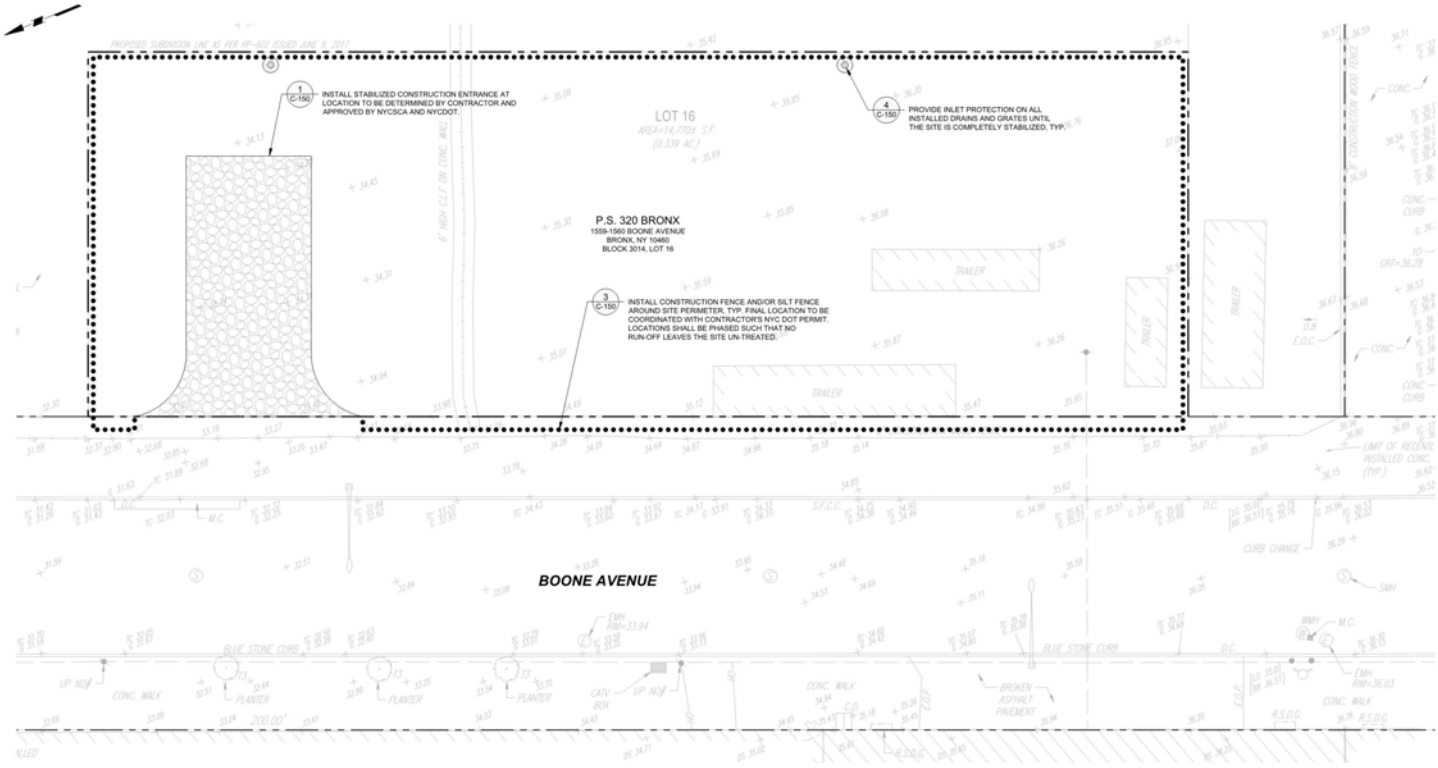

SOIL EROSION AND SEDIMENT CONTROL PLAN
SCALE: 1" = 10'

GENERAL NOTES

1. BACKGROUND INFORMATION TAKEN FROM BOUNDARY & TOPOGRAPHIC SURVEY FOR "MONADNOCK DEVELOPMENT, 1560 BOONE AVENUE, LOT 15, BLOCK 3014, BOROUGH AND COUNTY OF BRONX, CITY AND STATE OF NEW YORK" PREPARED BY CONTROL POIT ASSOCIATES INC. PC, LAST DATED 11/30/2017.
2. ELEVATIONS SHOWN ARE REFERENCED TO THE NORTH AMERICAN VERTICAL DATUM OF 1988 (NAVD88) WHICH IS 1.508 FEET BELOW THE BRONX TOPOGRAPHICAL BUREAU DATUM AND 1.10 FT ABOVE MEAN SEA LEVEL AT SANDY HOOK, NJ AS ESTABLISHED BY THE U.S. COAST AND GEODETIC SURVEY.

SOIL EROSION NOTES

1. IT IS THE CONTRACTORS RESPONSIBILITY TO VERIFY, COORDINATE AND STAGE OR SEQUENCE HIS WORK WITH ANY OTHER PLANNED OR ONGOING CONSTRUCTION ACTIVITIES AT THE SITE. CONTRACTOR SHALL COORDINATE ANY STAGE WORK, LAY DOWN, AND STORAGE AREA LOCATIONS AND ACCESS WITH OWNER PRIOR TO START OF WORK.
2. THE CONTRACTOR SHALL EXERCISE EXTREME CARE TO PREVENT DAMAGE TO EXISTING STRUCTURES BY OR AS A RESULT OF HIS OPERATIONS. ANY DAMAGE RESULTING FROM THE CONTRACTOR'S OPERATIONS SHALL BE REPAIRED AS DIRECTED BY THE OWNER'S REPRESENTATIVE AT NO ADDITIONAL COST.
3. ALL DEBRIS IN THE IMMEDIATE VICINITY OF THE WORK SHALL BE RECOVERED AND PROPERLY DISPOSED OF BY THE CONTRACTOR AT NO ADDITIONAL COST TO THE OWNER.
4. ALL CONSTRUCTION VEHICLES HAULING MATERIALS EITHER INTO OR OUT OF THE CONSTRUCTION AREA SHALL HAVE A SECURED TARP OVER MATERIALS TO PREVENT SEDIMENT POLLUTION OF PUBLIC ROADWAYS.
5. CONSTRUCTION EQUIPMENT AND VEHICLES WITHIN THE WORK AREA ARE TO BE PROPERLY MAINTAINED AND INSPECTED FOR LEAKING, PARTICULARLY FOR IDENTIFICATION OF VEHICLES LEAKING PETROLEUM PRODUCTS THAT MAY ENTER ADJACENT STORMWATER DRAINAGE FACILITIES OR INTO WATERS OF THE UNITED STATES.
6. AFFECTED ROADWAYS ARE TO BE CLEANED DAILY OR MORE FREQUENTLY IF OTHERWISE REQUIRED BY THE OWNER.
7. ALL EROSION AND SEDIMENT CONTROL PRACTICES WILL BE INSPECTED FOR STABILITY AND OPERATION WITHIN 24 HOURS OF EVERY 0.5-INCH OR GREATER RAINFALL, BUT IN NO CASE LESS THAN ONCE IN A SEVEN DAY PERIOD. ANY NEEDED REPAIRS WILL BE MADE IMMEDIATELY TO MAINTAIN ALL PRACTICES AS DESIGNED.
8. DISPOSAL OF COLLECTED SEDIMENT SHALL BE MADE TO AREAS DESIGNATED BY THE LEED INSPECTOR IN A MANNER WHICH IS CONSISTENT WITH THE INTENT OF THE PLAN.
9. EROSION AND SEDIMENT CONTROL DEVICES SHALL REMAIN OPERATIONAL UNTIL FINAL STABILIZATION. "FINAL STABILIZATION" SHALL MEAN THAT ALL SOIL DISTURBANCE ACTIVITIES HAVE CEASED AND A UNIFORM, PERENNIAL VEGETATIVE COVER WITH A DENSITY OF EIGHTY (80) PERCENT OVER THE ENTIRE PERVIOUS SURFACE HAS BEEN ESTABLISHED; OR OTHER EQUIVALENT STABILIZATION MEASURES, SUCH AS PERMANENT LANDSCAPE MULCHES, ROCK RIP-RAP OR WASHED/CRUSHED STONE HAVE BEEN APPLIED ON ALL DISTURBED AREAS THAT ARE NOT COVERED BY PERMANENT STRUCTURES, CONCRETE OR PAVEMENT.
10. ONCE DISTURBANCE ACTIVITIES ARE COMPLETE AND THE WORK AREA HAS BEEN STABILIZED, REMOVE THE SOIL EROSION AND SEDIMENT CONTROL DEVICES FOR THAT WORK AREA.
11. ALL STORM SEWER STRUCTURES WITHIN THE SITE MUST BE CLEAR OF SEDIMENT AFTER THE SITE IS STABILIZED.
12. SOIL EROSION AND SEDIMENT CONTROL MEASURES SHALL BE IN COMPLIANCE WITH EPA STANDARD 832/R-92-005, CHAPTER 3 SEDIMENT AND EROSION CONTROL.
13. ALL EXCAVATED SOIL SHALL BE REMOVED FROM THE SITE IN COVERED TRUCKS.
14. CONTRACTOR IS RESPONSIBLE FOR PROCURING AND COMPLYING WITH ALL PERMITS REQUIRED, INCLUDING BUT NOT LIMITED TO DOT LANE CLOSURES AND DEWATERING.

PLANNED EROSION AND SEDIMENT CONTROL PRACTICES

1. SILT FENCE OR SILT BARRIER: AS INDICATED ON DRAWINGS AND OR AS DIRECTED BY SOIL EXPERT IN FIELD.
2. INLET PROTECTION: AS INDICATED, PROVIDE INLET PROTECTION ON ALL INSTALLED DRAINS AND GRATES UNTIL THE SITE IS COMPLETELY STABILIZED.
3. STAGING, LAY-DOWN, AND CONSTRUCTION ENTRANCE AREAS: STAGING, LAY-DOWN, AND ENTRANCE AREAS FOR VEHICLES AND EQUIPMENT ARE TO BE LOCATED ON STABILIZED PORTIONS OF THE SITE AS DIRECTED BY THE OWNER IN THE FIELD. VEHICLES AND EQUIPMENT ARE TO BE WASHED DOWN IN STABILIZED AREAS PRIOR TO EXITING THE SITE AS NEEDED. WASH DOWN WATER SHALL BE DIRECTED TO SITE EROSION AND SEDIMENT CONTROLS.
4. SURFACE STABILIZATION: PAVEMENT COURSES WILL BE INSTALLED AS SOON AS FINISHED GRADE IS REACHED. NO SOIL SHALL REMAIN UNSTABILIZED FOR OVER 7 DAYS. TEMPORARY STABILIZATION SHALL CONFORM TO NYSDEC STANDARDS.
5. DUST CONTROL: SHOULD EXCESSIVE DUST BE GENERATED, IT WILL BE CONTROLLED BY SPRINKLERING.

S 1.2R Site Selection

This credit is *feasible*. The project site is required to meet the following if feasible.

1. The project is located on a previously developed site as described in the Phase I and II ESA Reports, in addition the site is located above flood plain requirements are not relevant.
   Refer to Section 4 -S1.2R – FEMA Flood hazard Resources Map on Page 77.

2. The site is near the Bronx River, located east of the Sheridan Expressway and Starlight Park. A letter from NY Natural Heritage Program and the US Fish and Wildlife Service listing of endangered species for the county has been provided in **Section 4 - S1.2R -DEC Letter on Page 75.** As per the US Fish and Wildlife Service listing, there are no endangered species listed in this area of the Bronx.
   Also, Environmental Resource Mapper from the New York State Department of Environmental Conservation (http://www.dec.ny.gov/gis/erm/) confirms the project is not located in ban area with rare plants or animals. **Refer to Section 4 – S1.2R – Site Selection NYS Environmental Resource Mapper on Page 88 and- S1.2R – Federally Listed Endangered Species List on Page 78.**

3. The project is not located within 50 feet of any wetlands.

4. The site was previously developed and is not within 100 feet of a water body. The nearest water body is the Bronx River.

5. Project site is not public parkland prior to acquisition.

S 1.3R Sustainable Site & Building Layout

This credit is *feasible*.

The DDP Design Team has prepared documentation of the following four analyses.

***Analysis 1**: Identify visible locations on the roof(s) for potential renewable energy generation.*

Monthly solar analyses have been conducted to spot the area that captures sunlight throughout the peak hours (10 AM- 2 PM.) The area indicated as "potential location for PV module installation" on **Refer to Section 4 *-S1.3-01B on page 79*** captures sunlight minimum of four hours (10 AM- 2 PM) per a day throughout a year. The building located in the Southeast corner of the proposed residential site. The project is to be 5 stories tall with a play yard on the 3rd floor of the project facing south. The proposed residential buildings are 7/9 stories on the north and 14 stories to the southwest side of the proposed building. **Due to the heights of the residential building directly adjacent to the school, the building will be covered in shadow in the early part of the day and have direct sun light on the west façade and the roof during the afternoon hours throughout the year.**

Roof plan is provided to identify the potential locations of solar photovoltaic (PV) module. Refer to S1.3R – Analysis 1 Diagram in Section 4 Supporting Credit Documentation on Page 79.

***Analysis 2:** Plot shadow patterns from surrounding buildings onto project site to optimize access to daylight*

&

Analysis 3: Plot shadow patterns from proposed building(s)/addition on adjacent properties and buildings and consider design options to address impact as necessary

The Shadow Plot plans were conducted for three different times during the months of June, September, and December to show the relationship of the adjacent building and proposed building to its immediate site. The residential buildings west of the site will be casting shadows on the proposed school building and the courtyard at all morning hours. The west facing (Boone Avenue) façade will receive the most sun during the afternoon hours. The buildings west of the project site are currently 1-2 story buildings and houses.

Refer to S1.3R – Analysis 2/3 – Shadow Plot Plans for June, September and December in Section 4 – Supporting Credit Documentation on Page 80-82.

Analysis 4: Consider prevailing winds when determining the site and building layout

The wind velocity range (m/s) below 5.4 is considered to be comfortable for most of the human activities, such as sitting, standing, and walking.

As illustrated on Analysis 4 Diagram (Refer to Section 4 on Page 83) the residential buildings along West Farms Road will block the school building from any potential Southwest winds. During the winter season, the most predominate winds are northwest, which will be facing the West facing (Boone Avenue) façade. During the summer, predominate winds are South and West winds. During the warmer months, the west façade operable windows can be used for fresh air intake and make the interior space comfortable indecent of the Mechanical systems.

Refer to S1.3R – Analysis 4 – Wind Analysis in Section 4 – Supporting Credit Documentation on Page 83.

S 1.4 Development Density & Community Connectivity

This credit is *feasible* as the project site will comply with Option 1 - Community Connectivity.

In addition to the narrative below, please refer to the attached supporting documents S1.4- Development Density &-Community Connectivity on Page 84, that includes a Site Map with Basic Services & List of Business and S1.4-OASIS Map & Density Chart in Section 4 on Page 85.

The project site is currently an empty plot of land that is currently sealed off by a construction fence. The area was predominately auto body shops and warehouses, meaning the site is a previously developed site. As per SCA GSG, the proposed school shall be located within recently revised Zoning Designation to the site form manufacturing to Residential, with an average den. The site is located in R8X residential zone with a commercial zoning overlay of C2-4. As indicated on the attached OASIS map with calculation spreadsheet in Section 4, in the specified lot, an average density is 10 dwelling units per acre.

Also, the proposed building is within a 1/2 mile radius of 10 basic services via pedestrian access. Refer to the attached supporting document in Section 4 for the list of community services and their locations.

S 1.5R Joint Use of Facilities, Community Access

This credit is *feasible*. The intended use of the building is a community facility in conjunction with a teaching facility. The building is proposed to function independently of the school when used for the community. The school will have a Student Dinning Area on the First floor and the Gymatorium on the Second floor. The other

potential community accessible spaces are the **Exercise Room (located on the 3rd floor)** and the **Roof Top Play Area and Library (located on the fourth and fifth floor respectively).**

Refer to Section 4 S1.5R – Joint Use of Facilities, Community Access Plans on Page 86.

S 1.6P Environmental Site Assessment

This credit is *feasible*. **Phase I Environmental Site Assessment (ESA) on Page 87 was prepared by AKRF** (dated May 2008) and a follow up **Phase II (ESA) prepared by AKRF**, dated May 2008. A **Phase II Environmental Site Assessment (ESA) was prepared by Langan** as requested by the SCA, dated May 18, 2017. Please see the attached supporting documents ***"Phase I Environmental Site Assessment – Executive Summary" and "Phase II Environmental Site Assessment" in Appendix***.

Summary from findings in ESA Phase I (AKRF Report – May 2008):
As per both Environmental Site Assessment reports, the site consisted of several forms of manufacturing and warehouses during the neighborhoods history of being a predominantly manufacturing area. The original building was built in 1931 and was used as a garage containing a buried 550-gallon tank. In 1977, the garage was converted into a warehouse, where the tank was no longer listed in the Sanborn Map. The adjacent lot known as 1560 Boone Avenue was used as an industrial manufacturing site for 50+ years. This facility was used as a meat provisions facility. A 10,000 gallon No. 4 fuel oil aboveground storage tank was located in the basement of the facility. According to several reports (2 reports on file), spills were attributed to the tank. Based when the ESA I report was written, these spills were still open ant the NYC Department of sanitation. The oil was observed via a soil boring, indicated that it was diesel fuel and motor oil in monitoring wells located adjacent to the site. Due to the age of the buildings asbestos containing materials and lead-based paint were likely used in all the buildings that stood on the site. According to the report, there were several drains that discharged into the municipal sewer system. A remedial program was initiated by LiRo Engineers and was active as of July 18, 2006. On the corner of East 173rd Street and Boone Avenue, that was the site of Adhesive Products Corporation, known as a hazardous waste generator. This facility at the time of the report was a heating/plumbing supplier. This facility housed 23 underground tanks and closed in place and removed according to records in April 1992.

Summary from findings in ESA Phase II (Langan Report – May 18, 2017):
The Phase II report by Langan was prepared at the request of the SCA. The report was written for the site of 1560 Boone Avenue in the Bronx as a site for a school in a new residential development occurring in the same site. The report was prepared in determining that all findings in regards to environmental conditions and existing vapor encroachment conditions need special consideration and if the site is suitable for the a Public School. Several samples were taken of the soil vapor samples and ambient air sample were taken for analysis. Boring Samples were also taken, but no VOC were detected above the Unrestricted Use Soil Cleanup Objectives and Supplemental Soil Cleanup Objectives. Several traces of metals were detected in the soil at levels considered above the Unrestricted Use Soil Cleanup Objectives and Supplemental Soil Cleanup Objectives. The lead traces found in the site were not in excess of the toxicity characteristic regulatory levels. Recommendations based on the Lagan report were to provide an active-slab depressurization system and soil vapor barrier that are to be included in the new building design. During excavation, all materials removed and disposed of should be identified by the contractor. If dewatering of the site is required during construction of the school, the procedure should follow all local, state and federal regulations. All suspected materials and buried structures that may contain ACM, LBL, PCB are to be removed with care and appropriate measures.

Executive Summary Phase I - AKRF:

AKRF, Inc. (AKRF) was retained by Signature Urban Properties, LLC to perform a Phase I Environmental Site Assessment of two steel frame, brick and mortar warehouse structures located at 1559 and 1560 Boone Avenue in

the West Farms neighborhood of the Bronx, New York. The combined lot area of both properties is approximately 74,000 square feet, with the 1559 Boone Avenue lot approximately 10,000 square feet and the 1560 Boone Avenue lot approximately 64,000 square feet. The 1560 Boone Avenue property was an active meat processing facility and contained most of its usable square footage on the Boone Avenue street level. Some office areas existed on the second level, and storage and utilities were located in basement areas. The 1559 Boone Avenue property was used primarily as storage for packaging materials.

This Phase I Environmental Site Assessment was performed in accordance with customary principles and practices in the environmental consulting industry, and in conformance with the scope and limitations of ASTM Standard E1527-05, Standard Practice for Environmental Site Assessments: Phase I Environmental Site Assessment Practice. Any exceptions to, or deletions from, this practice are described in Sections 9.0, 10.0, and 11.0 of this report. The objective of this assessment was to identify any potential environmental concerns associated with the site resulting from past or current site usage or usage of neighboring properties. This assessment revealed the following, which include Recognized Environmental Conditions, as defined by the ASTM Standard:

1159 Boone Avenue:

- The property was built in 1931 according to tax files. A Sanborn map from 1951 Sanborn showed the property was a business garage containing a 550-gallon buried gasoline tank. The 1977 Sanborn map showed that it had been converted to a warehouse, and the buried gasoline tank was no longer shown.

1570 Boone Avenue:

- Historical Sanborn maps, regulatory databases and a site reconnaissance indicated that this property had a primarily industrial and manufacturing history for more than 50 years. This property comprised three separate, three-story buildings built during the 1940s and 1950s, and used for manufacturing purposes. These buildings were later joined. According to the warehouse's manager, a long-time building employee, and NYC Buildings Department records, the subject property was operated as a meat provisions facility under the ownership of Plymouth Rock Provisions, Ferris-Stahl-Meyer, and most recently PRG Packing Corporation (a food products manufacturer) and Prime Food Distributors. The 1951 Sanborn map indicated the northernmost building that is currently part of the property as Ace Ice Cream Cabinet Company, but this building was owned by Plymouth Rock Provisions by 1977.

- One 10,000-gallon No. 4 fuel oil aboveground storage tank (AST) previously existed in a basement room south-adjacent to the boiler room. The room was informally referred to as the "rock room" due to the earthen floor and exposed bedrock walls. Interviews with warehouse employees indicated that the 10,000-gallon tank was decommissioned and left in place in approximately 1990. This tank was associated with several spill numbers reported for three Consolidated Edison (Con Ed) vaults along West Farms Road, downgradient of the site, between 1998 and 2001. One of these spills, which involved petroleum seeping under an access door along West Farms Road in 1998, remains open with the New York State Department of Environmental Conservation (NYSDEC). In October 2003, a tank failure was reported for this tank, the tank was removed and the impacted area was remediated. A groundwater monitoring program was implemented for approximately one year. The spill due to the tank failure was closed in July 2005 and No Further Action was required by the NYSDEC.

- One temporary, approximately 1,000-gallon No. 2 fuel oil AST was located in the basement boiler room. The AST was not listed under any regulatory databases as it was only intended as a temporary tank. The tank supplied the boiler and was hooked up with temporary hoses. Staining was observed on the concrete around the tank and associated hoses.

On-site Findings at Both Properties:

- Based on the age of the buildings, asbestos-containing materials (ACM) may be present. Suspect ACM observed during the site visit included floor tile, window material, roofing material, and thermal system insulation (TSI) around pipes. Most TSI was in damaged condition; other observed suspect ACM were in good to fair condition.

- Based on the age of the subject buildings, lead-based paint may be present. In general, few painted surfaces were observed in the subject buildings; painted surfaces observed in the 1560 Boone Avenue office and basement areas were in good to fair condition.

- The on-site buildings were primarily illuminated by fluorescent lighting. Based on the age of the buildings, suspect PCB- and mercury-containing fluorescent lights, switches, and other electrical equipment, may be present. No leaks or stains were noted around lighting fixtures and switches, which do not currently present a potential hazard to human health.

- Floor drains were noted throughout both properties. According to the warehouse manager, the drains discharge to the municipal sewer system. Some staining was observed on the concrete surrounding the floor drain in the 1560 Boone Avenue boiler room. No significant staining was noted around other visible floor drains.

- Several 55-gallon, or smaller, drums were observed during the site visit. Most drums contained food grade chemicals, but some contained hydraulic or gear oil.

Off-site concerns:

- Two spills remain open for the New York City Department of Sanitation (DOS) garage located directly northeast of 1560 Boone Avenue, across East 173rd Street. The first spill was reported in 1998 after free phase petroleum was observed in a soil boring. The product was originally presumed to be diesel fuel, but later DEC correspondence indicates motor oil in some of the installed monitoring wells. Additional correspondence refers to persistent contamination in monitoring well MW-19 across East 173rd Street from the DOS garage, attributed to an offsite source. During the site inspection, one monitoring well was observed at the northwest corner of East 173rd Street and West Farms Road, approximately 80 feet cross-gradient from the "rock room". A remedial program was implemented by LiRo Engineers, and was active as of July 18, 2006. The second spill was reported in 2001 when 50 gallons of unknown petroleum were released from a broken oil/water separator pipe. Allstate reportedly responded with a vac truck to empty the contents of the separator and the excavation, and a DOS representative was said to have repaired the separator. No other comments were made on the status of the spill.

- The lot located on the northeast corner of East 173rd Street and Boone Avenue (1660-1668 Boone Avenue), directly northeast across East 173rd Street from 1560 Boone Avenue, was previously identified as Adhesive Products Corporation, a hazardous waste generator. At the time of the site visit, the property was operated as a heating and plumbing supplier. During its history as an adhesive manufacturer, the property contained 23 underground storage tanks (USTs) which held chemicals such as ethyl acetate, methyl-ethyl-ketone, tolulene and 2-propanone, as well as petroleum products such as gasoline and No. 2 fuel oil. All of these tanks were closed in place or closed and removed in April 1992, the same year the facility received Resource Conservation and Recovery Act (RCRA) "failure to notify" violations. Based on the above information, and the cross-gradient to up-gradient location of the facility, potential releases from these tanks may have affected the subject site.

- Other adjacent properties included a former auto repair shop and garage with a 550-gallon buried gasoline tank, shown south-adjacent to the 1560 Boone Avenue property on historical Sanborn maps. At the time of the site visit, the lot was vacant with active excavation activity. A garage and repair shop north-adjacent to 1559 Boone Avenue, and directly across the street from 1560 Boone Avenue, was listed as containing two 550-gallon buried gasoline tanks on historical Sanborn maps. However, only one 275-gallon waste oil tank was listed at this garage in the NYS Petroleum Bulk Storage (PBS) database. This garage was active at the time of this report. No further information was obtained with regards to the gasoline tanks identified on Sanborn maps. Potential releases from these tanks may have affected the subject site.

- A former manufactured gas plant (MGP) was located approximately 600 feet east (in an inferred downgradient groundwater flow location) of the subject properties, and was identified as Northern Gas Light Company on the 1896 Sanborn map. The plant was idle as of 1915 under the ownership of Northern Union Gas Company, and on the 1951 Sanborn map, the property is vacant under the ownership of Consolidated Edison. At the time of this report, the site was vacant and being remediated under New York's Voluntary Cleanup Program (VCP). This facility is unlikely to have affected subsurface conditions on the subject property because of the general down gradient location with respect to groundwater.

Based on the results of this assessment, the following recommendations are noted:

- A Subsurface Investigation (Phase II) should be conducted (this is occurring concurrently with this Phase I ESA).

- No closure documentation was available with respect to the 550-gallon gasoline UST on the 1559 Boone Avenue property (indicated on 1951 and 1971 Sanborn maps), or the 10,000 gallon No. 4 fuel oil AST (removed) on the 1560 Boone Avenue property. All inactive tanks should be properly closed in accordance with applicable state and local regulations.

- If the temporary, approximately 1,000-gallon AST in the 1560 Boone Avenue boiler room will continue to be used in the future, it should be considered permanent and if this tank is more than 1,100 gallons in size, it should be registered with the NYSDEC and FDNY and properly maintained to prevent any future releases. Depending on the tank's size, required spill prevention measures may include overfill protection, secondary containment, inspections and/or a Spill Prevention Control and Countermeasures (SPCC) plan.

- Damaged suspect ACM should be analyzed for the presence of asbestos. If positive results for asbestos are indicated, the damaged material should be removed and disposed of in accordance with all state and federal regulations. Remaining suspect ACM should be maintained in good condition. Prior to any renovation or demolition activities with the potential to disturb suspect ACM, an asbestos survey should be conducted and ACM that would be disturbed by these activities should be removed and disposed of in accordance with all state and federal regulations.

- Renovation or demolition activities with the potential to disturb lead-based paint must be performed in accordance with the applicable Occupational Safety and Health Administration regulation (OSHA 29 CFR 1926.62 – Lead Exposure in Construction). Areas containing suspected lead-based paint should be maintained in good condition.

- Unless there is labeling or test data which indicates that the on-site fluorescent light fixtures are not mercury- and/or PCB-containing, if disposal is required, it should be performed in accordance with applicable federal, state and local regulations and guidelines.

- Any unmarked abandoned drums or containers of suspect hazardous materials not removed by any vacating occupant should be properly tested to confirm their contents, and then properly disposed of in accordance with all federal and local regulations.

Executive Summary Phase II - AKRF:

1.0 INTRODUCTION

This report describes a Subsurface (Phase II) Investigation conducted by AKRF at the subject site, which consist of two separate properties, 1559 and 1560 Boone Avenue in the Bronx, NY (as shown on Figure

1) The combined area of the subject property is approximately 74,000 square feet; 1559 Boone Avenue is approximately 10,000 square feet, and includes a warehouse primarily used for packaging material storage, and 1560 Boone Avenue is approximately 64,000 square feet and includes active meat facility as well as basement, second floor and office areas. PRG Packing operates a meat processing facility, and Royal Foods operates a meat distribution company at the southwest end of the building. The Phase II investigation was intended to determine whether current or former on- or off-site activities have adversely affected subsurface environmental conditions at the subject property and to determine the depth to bedrock below each property. Three specific areas of concern were: the boiler room at 1560 Boone Ave; the previous location of a 10,000 gallon #2 fuel oil aboveground storage tank (AST) at 1560 Boone Avenue (the "rock room"); and the storage warehouse at 1559 Boone Avenue, historically proximal to a garage and repair shop. Investigation activities included: advancing soil borings at seven locations throughout the site; obtaining groundwater samples from three locations (including an existing monitoring well); and collecting soil and groundwater samples for laboratory analysis. This report describes the methods and results of the investigation. The scope of the Phase II study was based on the findings of the Phase I Environmental Site Assessment (ESA) performed concurrently by AKRF.

2.0 SITE BACKGROUND

2.1 Site Characterization
The subject site consists of two properties, 1559 and 1560 Boone Avenue in the West Farms area of the Bronx, NY. The properties are situated across the street from each other; 1559 has a lot area of approximately 10,000 sq/ft and 1560 has a lot area of approximately 64,000 sq/ft. Both properties consist of warehouses currently owned by 1660 Boone LLC, and operated as a provisions manufacture and distributer. The 1559 Boone Avenue building was primarily used as a storage area for packaging materials and the 1560 Boone Avenue building was an operational meat processing facility at the time of subsurface investigation. Access was limited to the 1560 Boone Avenue building because the operational area was regulated by the USDA, and most areas were denied access. (Refer to Figure 1). The subject block is bounded to the northeast by 173rd Street and an auto repair garage, to the southeast by West Farms Road and the Sheridan Expressway, and to the northwest by Boone Avenue and residential properties, and to the southwest by a vacant lot under construction and a home restoration company. The legal definition of 1559 Boone Avenue is Tax Block 3009, Lot 33, and 1560 Boone Avenue is defined as Tax Block 3014, Lot 15. The surrounding neighborhood to the West is predominantly residential and commercial in nature, to the North and South is primarily industrial and manufacturing, while to the East is a major transportation line with I-895 and a subway line running parallel to the Bronx River.

2.2 Groundwater Table
Surface topography is relatively flat along Boone Avenue, and slopes down approximately 15 feet along East 173rd Street to West Farms Road to the southeast. Based on reports compiled by the U.S. Geological Survey (Central Park, NY, NJ Quadrangle), the property lies at an elevation of approximately 40 feet above the National Geodetic Vertical Datum of 1929 (an approximation of mean sea level). The approximate depth to bedrock is 0 to 10 feet below the surface based on visual observations of exposed bedrock, as well as soil borings; bedrock outcrops were

observed along West Farms Road and along Longfellow Avenue. The approximate depth to the water table is 4 to 8 feet, based on soil borings and existing monitoring wells. Groundwater most likely flows in a general southeast direction toward the Bronx River, which is approximately 600 feet to the southeast. However, actual groundwater flow at the site can be affected by many factors including past filling activities, underground utilities and other subsurface openings or obstructions such as basements, bedrock geology, tidal fluctuations, and other factors beyond the scope of this study. Groundwater in The Bronx is not used as a source of potable water.

3.0 PREVIOUS ENVIRONMENTAL INVESTIGATIONS

Phase I Environmental Site Assessment, 1559 & 1560 Boone Avenue, Bronx, New York, AKRF, Inc. May, 2008. This Phase I Environmental Site Assessment for the project site was conducted concurrently with the Phase II investigation by AKRF in April, 2008. This report included the findings of a site inspection, a visual survey for the presence of suspect asbestos-containing materials (ACMs) and lead-based paint, the evaluation of available historical information, and the interpretation of relevant federal and state environmental databases. The findings of this report are summarized below:

General on-site concerns:

- Based on the age of the subject buildings, asbestos-containing materials (ACM) may be present. Suspect ACM observed during the site visit included floor tile, window material, roofing material, and thermal system insulation (TSI) around pipes. Most TSI was in damaged condition; other observed suspect ACM were in good to fair condition.

- Based on the age of the subject buildings, lead-based paint may be present. In general, few painted surfaces were observed in the subject buildings; painted surfaces observed in the 1560 Boone Avenue office and basement areas were in good to fair condition.

- The on-site buildings were primarily illuminated by fluorescent lighting. Based on the age of the buildings, suspect PCB- and mercury-containing fluorescent lights, switches, and other electrical equipment, may be present. No leaks or stains were noted around lighting fixtures and switches, which do not currently present a potential hazard to human health.

- Floor drains were noted throughout both subject properties. According to the warehouse manager, the drains discharge to the municipal sewer system. Some staining was observed on the concrete surrounding the floor drain in the 1560 Boone Avenue boiler room. No significant staining was noted around other visible floor drains.

- Several 55-gallon, or smaller, drums were observed during the site visit. Most drums contained food grade chemicals, but some contained hydraulic or gear oil.

1159 Boone Avenue:

- The 1559 Boone Avenue property was built in 1931 according to tax files. Historical Sanborn maps showed that in 1951 Sanborn map, this property was a business garage containing a 550-gallon buried gasoline tank. The 1977 Sanborn map showed that 1559 Boone Avenue had been converted to a warehouse, and the buried gasoline tank was no longer shown.

1560 Boone Avenue:

- Historical Sanborn maps, regulatory databases and a site reconnaissance indicated that 1560 Boone Avenue had a primarily industrial and manufacturing history for more than 50 years. This property comprised three separate, three-story buildings built during the 1940s and 1950s, and used for manufacturing purposes. These buildings were later joined. According to the warehouse's manager, a long-

time building employee, and NYC Buildings Department records, the subject property was operated as a meat provisions facility under the ownership of Plymouth Rock Provisions, Ferris-Stahl-Meyer, and most recently PRG Packing Corporation (a food products manufacturer) and Prime Food Distributors. The 1951 Sanborn map indicated the northernmost building that is currently part of 1560 Boone Avenue as Ace Ice Cream Cabinet Company, but this building was owned by Plymouth Rock Provisions by 1977.

- One 10,000-gallon No. 4 fuel oil aboveground storage tank (AST) previously existed at 1560 Boone Avenue in a basement room south-adjacent to the boiler room. The room was informally referred to as the "rock room" due to the earthen floor and exposed bedrock walls. Interviews with warehouse employees indicated that the 10,000-gallon tank was decommissioned and left in place in approximately 1990. This tank was associated with several spill numbers reported for three Consolidated Edison (Con Ed) vaults along West Farms Road, downgradient of the site, between 1998 and 2001. One of these spills, which involved petroleum seeping under an access door along West Farms Road in 1998, remains open with the New York State Department of Environmental Conservation (NYSDEC). In October 2003, a tank failure was reported for this tank, the tank was removed and the impacted area was remediated. A groundwater monitoring program was implemented at 1560 Boone Avenue for approximately one year. The spill due to the tank failure was closed in July 2005 and No Further Action was required by the NYSDEC.

- One temporary, approximately 1,000-gallon No. 2 fuel oil AST was located in the 1560 Boone Avenue basement boiler room. The AST was not listed under any regulatory databases as it was only intended as a temporary tank. The tank supplied the boiler and was hooked up with temporary hoses. Staining was observed on the concrete around the tank and associated hoses.

Off-site concerns:

- Two spills remain open for the New York City Department of Sanitation (DOS) garage located directly northeast of 1560 Boone Avenue, across East 173rd Street. The first spill was reported in 1998 after free phase petroleum was observed in a soil boring. The product was originally presumed to be diesel fuel, but later DEC correspondence indicates motor oil in some of the installed monitoring wells. Additional correspondence refers to persistent contamination in monitoring well MW-19 across East 173rd Street from the DOS garage, attributed to an offsite source. During the site inspection, one monitoring well was observed at the northwest corner of East 173rd Street and West Farms Road, approximately 80 feet cross-gradient from the "rock room". A remedial program was implemented by LiRo Engineers, and was active as of July 18, 2006. The second spill was reported in 2001 when 50 gallons of unknown petroleum were released from a broken oil/water (OS) separator pipe. Allstate reportedly responded with a vac truck to empty the contents of the OS separator and the excavation, and a DOS representative was said to have repaired the OS separator. No other comments were made on the status of the spill.

- The lot located on the northeast corner of East 173rd Street and Boone Avenue (1660-1668 Boone Avenue), directly northeast across East 173rd Street from 1560 Boone Avenue, was previously identified as Adhesive Products Corporation, a hazardous waste generator. At the time of the site visit, the property was operated as a heating and plumbing supplier. During its history as an adhesive manufacturer, the property contained 23 underground storage tanks (USTs) which held chemicals such as ethyl acetate, methyl-ethyl-ketone, tolulene and 2-propanone, as well as petroleum products such as gasoline and No. 2 fuel oil. All of these tanks were closed in place or closed and removed in April 1992, the same year the facility received Resource Conservation and Recovery Act (RCRA) "failure to notify" violations. Based on the above information, and the cross-gradient to up-gradient location of the facility, potential releases from these tanks may have affected the subject site.

- Other adjacent properties included a former auto repair shop and garage with a 550-gallon buried gasoline tank, shown south-adjacent to the 1560 Boone Avenue property on historical Sanborn maps. At the time of

the site visit, the lot was vacant with active excavation activity. A garage and repair shop north-adjacent to 1559 Boone Avenue, and directly across the street from 1560 Boone Avenue, was listed as containing two 550-gallon buried gasoline tanks on historical Sanborn maps. However, only one 275-gallon waste oil tank was listed at this garage in the NYS Petroleum Bulk Storage (PBS) database. This garage was active at the time of this report. No further information was obtained with regards to the gasoline tanks identified on Sanborn maps. Potential releases from these tanks may have affected the subject site.

- A former manufactured gas plant (MGP) was located approximately 600 feet east (in an inferred downgradient groundwater flow location) of the subject properties, and was identified as Northern Gas Light Company on the 1896 Sanborn map. The plant was idle as of 1915 under the ownership of Northern Union Gas Company, and on the 1951 Sanborn map, the property is vacant under the ownership of Consolidated Edison. At the time of this report, the site was vacant and being remediated under New York's Voluntary Cleanup Program (VCP). This facility is unlikely to have affected subsurface conditions on the subject property because of the general down gradient location with respect to groundwater.

4.0 TECHNICAL OVERVIEW

This section summarizes the site investigation activities. Field activities were conducted on April 16, 2008, by AKRF personnel, and ZEBRA Environmental Corp. of Lynbrook, New York. A total of seven soil borings were advanced; four at 1560 Boone Avenue and three at 1559 Boone Avenue. Based on visual observations of exposed rock outcrops at the west end of the 1560 Boone Avenue property, shallow refusal depths during subsurface sampling, as well as interviews with knowledgeable employees, the majority of 1560 Boone Ave lies directly atop bedrock.

4.1 Soil and Groundwater Sampling and Analysis

Soil samples were collected at each boring location by a Geoprobe® direct push probe (DPP) unit to a depth of 15 feet below grade or to refusal, whichever was encountered first. Shallow bedrock was encountered in all but one of the soil borings. Eight soil samples were collected for laboratory analysis from the seven borings SB-1 through SB-7, shown on Figure 2. Two samples were collected from boring SB-6: one at 2 to 3 feet below grade surface (bgs) and one from 6 to 9 feet bgs. Only one sample was collected from the remaining borings due to shallow refusal and the small amount of soil recovered. All but the sample from SB-3 were collected using three-foot long, two-inch diameter, and stainless steel macrocore piston rod samplers fitted with an internal acetate liner. SB-3, on the southeastern portion of the 1560 Boone Avenue building under the earthen floor of the 'cold room,' was completed with a hand auger. Soil samples were field-screened using a photoionization detector (PID), which measures relative concentrations of volatile organic compounds (VOCs) in the soil. Recovered soil from each boring was transferred into a sealable plastic bag and screened by placing the probe of the photoionization detector (PID) inside the plastic bag (headspace readings). Soil samples were chosen for laboratory analysis, based on field observations (odor and staining) and PID readings. At each boring location, AKRF field personnel recorded and documented subsurface conditions. Soil boring logs are provided in Appendix A. Groundwater samples were collected at three locations as indicated on Figure 2. The samples were collected at boring locations SB-2 (GW-1) and SB-7 (GW-3) from temporary well points installed in the borings, and, at one of three existing monitoring wells MW-3 (GW-2), located in the sidewalk along West Farms Road. No permanent wells were installed during this investigation. Soil and groundwater samples were placed in laboratory supplied containers, placed in a chilled cooler and shipped under chain-of-custody protocol to Alpha Woods Hole Labs, of Westboro, Massachusetts, a New York State ELAP-certified laboratory. . Each sample was analyzed for volatile organic compounds (VOCs) by EPA Method 8260, semi-volatile organic compounds (SVOCs) by EPA Method 8270, and Priority Pollutant Metals. Both filtered (dissolved) and unfiltered (total) analyses were conducted for metals in groundwater). For quality assurance/quality control (QA/QC) purposes, one field blank and one trip blank were sent with the collected groundwater samples for laboratory analysis. The field blank was analyzed for all of the parameters whereas the trip blank was analyzed for VOCs only.

4.2 Field Decontamination Procedures

To avoid contamination and cross-contamination of samples, either dedicated, sterilized, disposable sampling equipment was used, or the equipment was decontaminated before collection of each sample. Decontamination of the push probes was completed by scrubbing the equipment with a bristle brush using a non-phosphate detergent and tap water, repeated rinsing with distilled water, and allowing the equipment to air dry.

5.0 FINDINGS

5.1 Field Observations

Soil encountered below the 4-inch concrete floor slab of the 1559 Boone Avenue building primarily consisted of a thin layer of fill (sand with traces of gravel, silt, brick, concrete and asphalt), to a depth of approximately 4 to 15 inches beneath the slab. In borings SB-1, SB-2 and SB-3 in the eastern portion of the site, the fill was underlain by sand with traces of silt and gravel, which may be native material. In the remaining three borings, refusal was encountered at shallow depths, apparently on bedrock. No elevated headspace readings were detected by the PID. No odors, staining or other evidence of contamination were noted on the screened soil. Results of the field screening activities, soil descriptions, and observations are provided in the soil boring logs in Appendix A.

5.2 Soil Analysis Results

Soil sample analytical results were compared to the New York State Department of Environmental Conservation (NYSDEC) 6 NYCRR Part 375 Remedial Program Soil Cleanup Objectives (SCOs) for Commercial Use and the Recommended Soil Cleanup Objectives (RSCOs) outlined in the New York State Department of Environmental Conservation (NYSDEC) Technical and Administrative Guidance Memorandum (TAGM) No. 4046. In addition, results of the soil metals analyses were compared to Eastern United States background levels published in TAGM No. 4046.Laboratory analytical data sheets are included in Appendix B. Volatile Organic Compounds (VOCs). As shown in Table 1A, no VOCs were detected above the regulatory levels. The only VOCs detected were tetrachloroethene in sample SB-7 (6'-7') at a concentration of 0.0065 ppm, well below the TAGM RSCO of 1.4 ppm and chloroform in SB-2 (6'-8'), at a concentration of 0.028 ppm, below its TAGM RSCO of 0.3 ppm and Part 375 SCO of 350 ppm. These detections may be attributable to the urban fill or to past on- or off-site solvent use or industrial and manufacturing operations in the area. Nonetheless, the levels detected are not significant. Semivolatile Organic Compounds (SVOCs) due to the small amount of recovered soil, SB-4 was not tested for SVOCs. Soil analytical results are presented as Table 1B. However, to accurately quantify the SVOCs for comparison with the RSCOs, the polycyclic aromatic hydrocarbons (PAHs) portion of the SVOCs were re-analyzed by the laboratory at lower detection limits. The results of the re-analysis are presented in Table 1C. The only regulatory level exceedance occurred in SB-3 (Surface Sample) with a concentration of 4.5 ppm of benzo(a)pyrene (TAGM RSCO of 0.061 ppm, and Part 375 SCO of 1 ppm). Based on the concentration detected and on the history of the site, the compound is likely from the urban fill and not from an on-site release or spill. Other SVOCs detected below their SCOs and RSCOs in the analyzed soil samples included PAHs, which are commonly found in urban fill, including benzo(a)anthracene, benzo(a)pyrene, pyrene, Indeno (1,2,3,-cd)pyrene, phenanthrene, benzo(b) fluoranthene, benzo (ghi)perylene, benzo(k) fluoranthene, and chrysene. Based on the analytical results and field observations, the PAHs are attributable to the urban fill. The nature and levels of SVOCs detected are not likely indicative of contamination from a release or spill.

Metals

Soil analytical results for metals are presented in Table 1D. Metals analysis was not conducted on samples SB-1and SB-4 (both from directly below the floor slab) due to the insufficient amount of recovered soil. Metals were detected in the six soil samples analyzed, however only two exceedances were found of SCOs, RSCOs or TAGM background ranges: Magnesium was detected in SB-3 (Surface Sample) with a concentration of 8700 ppm, exceeding the Eastern USA background range of 100-5,000 ppm (no background levels were given for Part 375 SCO or TAGM RSCO for this compound.) Mercury was detected in SB-2 (6'-8') at a concentration of 2.9 ppm, exceeding the Eastern USA Standard of 0.001-0.2 ppm, the TAGM RSCO of 0.1 ppm, and slightly exceeding the Part 375 SCO of 2.8 ppm. Other metals detected below regulatory standards included calcium, chromium, cobalt, copper, iron, lead, manganese, nickel, potassium, vanadium and zinc. Based on the nature and concentrations of

metals detected, including the exceedances, the metals are attributable to the urban fill and not to a specific release or spill.

5.3 Groundwater Analysis Results

Groundwater samples were collected from soil borings locations SB-2, SB-7 and an existing monitoring well (Existing MW-3), located on the eastern sidewalk of the 1560 Boone Avenue building. Laboratory analytical results were compared to the NYSDEC Class GA Ambient Water Quality Standards (drinking water standards), although groundwater in the Bronx is not used as a potable source. Laboratory analytical data sheets are included in Appendix B.

Volatile Organic Compounds

Results for VOCs are provided as Table 2A. 1, 2, 4-trimethylbenzene, 1, 2, 4, 5-tetramethylbenzene, 1, 4-diethylbenzene, isopropylbenzene, n-propylbenzene, sec-butylbenzene and naphthalene were detected in sample GW-2 (Existing MW-3), located on the eastern sidewalk of the 1560 Boone Avenue building. 1, 2, 4, 5-tetramethylbenzene was detected in GW-2 at a concentration of 14 parts per billion (ppb), exceeding the Class GA standard of 5 ppb. 1, 2, 4-trimethylbenzene, n-butylbenzene, isopropylbenzene, n-propylbenzene, sec-butylbenzene and p-isopropyltoluene were detected at concentrations of 51 ppb, 3.2 ppb, 14 ppb,14 ppb, 6.6 ppb and 2.5 ppb respectively, above the Class GA standard of 1 ppb for these compounds. Naphthalene was detected at a concentration of 60 ppb above the Class GA standard of 10 ppb. These compounds are typically associated with gasoline, however, no past or present on-site gasoline usage was indicated in the Phase I ESA for the 1560 Boone Avenue location. Although a gas tank was located at 1559 Boone Avenue, this is relatively distant from where GW-2 was collected and since no significant gasoline-related compounds were detected in any of the soil samples, these VOCs may well be reflective of area groundwater quality affected by industrial, automotive and manufacturing usages, rather than indicative of a specific on-site release or spill. Three commonly found solvents: trichloroethene, tetrachloroethene, and cis-1, 2-dichloroethene were detected in GW-3 (SB-7), at concentrations of 5.5 ppb, 26 ppb and 6.5 ppb respectively, above their Class GA standards of 5 ppb. These exceedances may be indicative of on-site solvent use or area groundwater quality. Chloroform was detected in GW-1 (SB-2) at a concentration of 18 ppb, above the Class GA standard of 7 ppb. This is a typical compound detected in groundwater in industrial areas of New York.

Semi-Volatile Organic Compounds

As with the SVOC soil samples, re-analysis of the PAH portion was required to more accurately quantify these compounds for comparison with Class GA standards. As shown in Table 2B and Table 2C, PAHs were detected in samples GW-2 (Existing MW-3) and GW-1 (SB-2). Naphthalene was detected in sample GW-2 (Existing MW-3) at a concentration of 41 ppb, above the Class GA standard of 10 ppb and benzo(a)pyrene was detected in sample GW-1 (SB-2) at a concentration of 0.22 ppb (the standard is “none detected”).. No other SVOCs were detected above Class GA standards. Napthalene is also a parameter in the VOC list and its potential source was discussed above. The detection of benzo(a)pyrene is likely attributable to the urban fill or an artifact of soil particles entrained in the (unfiltered) sample. It should be noted that even in the re-analysis of the PAHs, some of the compound detection limits could not be reduced below the Class GA standards. As such, some PAHs may be present in the groundwater samples at concentrations below the laboratory detection limits.

Metals

Groundwater analytical results for total and dissolved metals are presented in Table 2D. In total metals analysis, eighteen metals were detected in the groundwater sample analyzed. Of those metals, cadmium, chromium, copper, iron, lead, magnesium, manganese, mercury, nickel, and sodium were detected at concentrations above their respective Class GA standards. However, in the filtered (dissolved) analyses, only four metals were detected at concentrations above Class GA standards (magnesium, manganese, iron and sodium). Since the sample for total metals analysis is not filtered, particles in the surrounding soil, agitated by the sampling process, become entrained in the groundwater sample. The concentrations of total metals exceeding the standards are likely due to

the suspended sediments in the collected sample and not indicative of significant contamination from past operations. The detected levels in the dissolved analysis are typical of local groundwater quality in industrial areas of New York and are not indicative of a release or spill.

6.0 CONCLUSIONS AND RECOMMENDATIONS

AKRF, Inc. (AKRF) conducted a subsurface (Phase II) investigation at the 1559 & 1560 Boone Avenue property in The Bronx, New York to determine whether current or former on- or off-site activities have adversely affected environmental conditions. Seven soil borings were advanced (see Figure 2) and eight soil and three groundwater samples were collected for laboratory analysis. Soil encountered primarily consisted of a 4 to 15 inches fill layer. In borings SB-1, SB-2 and SB-3 in the eastern portion of the site, the fill was underlain by seemingly native material. In the remaining borings, bedrock was encountered at very shallow depths. Groundwater, when encountered, was at a depth of approximately 4 to 8 feet. Soil sampling results were compared to the New York State Department of Environmental Conservation (NYSDEC) 6 NYCRR Part 375 Remedial Program Soil Cleanup Objectives (SCOs) for Commercial Use and the Recommended Soil Cleanup Objectives (RSCOs) outlined in the New York State Department of Environmental Conservation (NYSDEC) Technical and Administrative Guidance Memorandum (TAGM) 4046. In addition, results of the soil metals analyses were compared to Eastern United States background levels published in TAGM No. 4046. Groundwater analytical results were compared to the NYSDEC Class GA Ambient Water Quality Standards (drinking water standards), although groundwater in the Bronx is not used as a potable source.

Soil Sampling

Results of the soil sampling were that no volatile organic compounds (VOCs) were detected above the comparison levels and the one exceedance for semi volatile organic compounds (SVOCs) and the detected levels of metals were attributable to fill material rather than a site release or spill.

Groundwater Sampling

Results of the groundwater sampling indicated likely gasoline-related contamination in sample GW-2 (Existing MW-3), located on the eastern sidewalk of 1560 Boone Avenue. No gasoline usage is known to have occurred at this building. Although a gasoline tank was located at 1559 Boone Avenue, this is relatively distant and since no significant gasoline-related compounds were detected in any of the soil samples, these VOCs may well be reflective of area groundwater quality affected by industrial, automotive and manufacturing usages, rather than indicative of a specific on-site release or spill. Three solvents (trichloroethene, tetrachloroethene, and cis-1, 2-dichloroethene) detected in GW-3 (SB-7) and chloroform detected in GW-1 (SB-2), at concentrations above the Class GA standards may be indicative of on-site solvent use or more likely area groundwater quality.
SVOCs and metals detections were typical of groundwater quality in New York City and not indicative of a release or spill.

Recommendations:

No evidence of significant petroleum-contaminated soil was detected by this study, but such contamination may be present in other areas not tested by AKRF as access to the site was limited. No further investigation is recommended if the site is to remain in its present usage. Should redevelopment be contemplated, AKRF recommends the following:

- If petroleum storage tanks, petroleum-contaminated soil or groundwater or other evidence of a release or spill is encountered, if required by NYS law, it should be reported to the New York State Department of Environmental Conservation (NYSDEC) and remediated in accordance with applicable regulations.

- All soil and any other materials intended for off-site disposal should be tested in accordance with the requirements of the intended receiving facilities and transportation and disposal of this material must be in accordance with federal, state and local requirements covering licensing of haulers and trucks, placarding, truck routes, manifesting, etc.

- To minimize the potential for impacts to the community and construction workers, all construction work involving soil disturbance should be performed under a site-specific environmental construction health and safety plan (CHASP). The CHASP would be based on the results of this Phase II study and would specify appropriate testing and/or monitoring and detail appropriate measures to be implemented (including notification of regulatory agencies) if underground storage tanks, soil or groundwater contamination, or other unforeseen environmental conditions are encountered.

- If dewatering is required, the water might require pretreatment prior to discharge into the sewer system. Discharge water must meet the New York City Department of Environmental Protection (NYCDEP) criteria for effluent to municipal sewers, in accordance with the NYCDEP Bureau of Wastewater Treatment (BWT) Wastewater Quality Control Permit and dewatering will require testing of the water prior to obtaining an appropriate permit or approval.

Executive Summary Phase II – Langan Engineering

At the request of the New York City School Construction Authority (NYCSCA), Langan conducted a Phase II Environmental Site Investigation (ESI) of 1560 Boone Ave, Parcel 3C (hereafter referred to as the "Site"). The Site is located at 1560 Boone Avenue in the Bronx, New York (Tax Block 3014, Portion of Lot 15) in an area that is primarily characterized by industrial, residential, and commercial use. The NYCSCA is considering the construction of a 5-story building for a 500-seat primary school facility as part of a new residential development.

The Site consists of an approximate 14,700-square-foot portion of Lot 15 and is currently used by a private developer for staging and parking for the southern-adjacent active residential construction project. According to a 2008 Phase I Environmental Site Assessment (ESA) prepared by AKRF, Inc. (AKRF) for the entirety of Lot 15, including the Site, a warehouse formerly operated at the Site and was used for processing, packaging, and distributing meat until approximately 2008. The warehouse was present during the Phase I ESA site reconnaissance, but was later demolished.

The Site is bounded by East 173rd Street followed by residential buildings and a building operated by New York City (NYC) Sanitation to the north, West Farms Road followed by Sheridan Expressway to the east, an active construction site (Lot 9) to the south, and Boone Avenue followed by one-story buildings used as auto garages to the west.

The 2008 Phase I ESA Report identified Recognized Environmental Conditions (RECs), Vapor Encroachment Conditions (VECs) and environmental concerns for the Site, including historical use of the Site as a meat processing and distribution facility, the presence of aboveground storage tanks (ASTs) near the Site 1, an off-site spill associated with an underground storage tank (UST) containing gasoline, and the use of surrounding properties as auto garages and repair shops. The Phase I ESA Report also identified building materials containing asbestos, lead, polychlorinated biphenyls (PCBs) and mercury in buildings formerly located on the Site.
The purpose of the Phase II ESI was threefold: 1) to determine if the RECs, VECs, and environmental concerns identified in the Phase I ESA Report require special consideration and/or affect the suitability of the Site for use as a public school facility, 2) to preliminarily characterize the environmental condition of the soil anticipated to be excavated for construction of the new school facility, and 3) to comply with the New York City Office of Environmental Remediation (NYCOER) E-Designation Remedial Investigation requirements and protocols. A Phase II ESI Work Plan was submitted to NYCOER on March 21, 2017 and accepted on March 27, 2017.

Phase II ESI field activities were performed between March 28, 2017 and March 31, 2017 and consisted of a geophysical survey, advancement of six soil borings and collection of ten soil samples (including one duplicate sample), installation of six soil vapor probes and collection of seven soil vapor samples (including one duplicate

sample), collection of one ambient air sample, and installation of three temporary monitoring wells and collection of one groundwater sample. The Phase II ESI scope of work complies with the requirements of the NYCOER E-Designation program for site investigations, as well as the Phase II ESI SOW.

According to the results of the Phase II ESI, the following can be concluded:

- Subsurface soil generally consisted of historic fill on the Site which extends to depths between 2 and 4 feet. Bedrock was encountered at depths between 3 and 8 feet.
- Evidence of releases from the above ground storage tanks near the Site was not found.
- No anomalies indicative of underground storage tanks were identified during the geophysical survey.
- Six (6) soil vapor samples and one ambient air sample were collected and analyzed for volatile organic compounds (VOCs). Petroleum- and chlorinated solvent-related VOCs were detected in soil vapor at concentrations exceeding background comparison criteria. Trichloroethene (TCE) was detected above the New York State Department of Health (NYSDOH) Air Guideline Value (AGV) in one soil vapor sample. Concentrations of 1, 2, 4-trimethylbenzene, o-xylenes and m- & p-xylenes exceeded background comparison criteria in five soil vapor samples. The detected concentrations are likely attributable to nearby off-site sources including a historical garage and repair shop located western-adjacent to the Site and the former USTs and closed spill located in the southern-adjoining lot.
- Acetone was detected in soil and groundwater samples and its presence is considered a laboratory artifact.
- Six (6) soil borings were advanced on the Site to depths ranging from 3.5 to 8.5 feet below ground surface (bgs). No VOCs were detected above Unrestricted Use Soil Cleanup Objectives (SCOs) and Commissioner Policy 51 (CP-51) Supplemental Soil Cleanup Objectives (SSCOs). Four (4) semivolatile organic compounds (SVOCs) (benzo(a)anthracene, benzo(a)pyrene, Benzo (k) fluoranthene, and chrysene) were detected in soil samples at concentrations above Unrestricted Use SCO and CP-51 Supplemental Soil Cleanup Objectives (SSCOs). The detected concentrations are likely attributable to the presence of historic fill at the Site.
- Five (5) metals (copper, lead, mercury, nickel, and zinc) were detected in soil at concentrations at concentrations above Unrestricted Use SCOs and/or CP-51 SSCOs. The detected concentrations are likely attributable to the presence of historic fill at the Site. PCBs, pesticides, and herbicides were not detected in any soil samples above the comparison criteria.
- One (1) groundwater sample was collected and analyzed for VOCs. Groundwater was encountered at approximately 7.5 feet below grade at temporary monitoring well MW-01 installed during the Phase II ESI. Two other wells (MW-02 and MW-06) were installed; however, groundwater was not encountered in these wells during the investigation. Because of shallow bedrock, it was concluded that rainwater may be perched on top of bedrock. VOCs m- & p-xylenes and acetone were detected, but their concentrations did not exceed New York State Department of Environmental Conservation (NYSDEC) Division of Water Technical and Operational Guidance Series (TOGS) 1.1.1 Ambient Water Quality Standards and Guidance Values for Class GA water. Other parameters were not analyzed because of limited sample volume.
- Based on the total lead concentrations exceeding 100 milligrams per kilogram (mg/kg), two (2) soil samples were selected for Toxicity Characteristic Leaching Procedure (TCLP) analysis. The TCLP analytical results did not exceed the toxicity characteristic regulatory level for lead of 5 mg/L.

Conclusion:

To address the RECs, VECs, and environmental concerns that require special considerations and/or have the potential to affect the suitability of the Site for use as a school facility, the following are recommended:

- An active sub-slab depressurization system (SSDS) and a soil vapor barrier should be integrated into the new building design including integration with any proposed damp-proofing or waterproofing components of the new building design to prevent VOCs in soil vapor from entering the proposed school building.
- All material excavated during construction activities should be properly characterized and disposed of, including collection and analysis of additional samples if required by the contractor-selected disposal facilities.
- While not expected to be required, any dewatering necessary during school construction activities must be performed in accordance with applicable local, state and federal regulations. Dewatering required during construction should be minimized to mitigate potential influx of contaminated water from off-site sources toward the Site.
- If landscaped areas are incorporated into the development of the Site, any exposed soil should be covered by a minimum 2-foot thick layer of environmentally clean fill.
- Suspect ACM, LBP, PCB-containing materials, including buried structures, affected by Site development should be properly managed during construction activities. Based on the Phase II ESI results, additional investigation is not recommended for the Site.

S 1.7 Brownfield Redevelopment

Based on the site assessment and investigation, this credit is *not-feasible*. The site is not listed in the New York State Department of Environmental Conservation of Brown Field Sites. As per the findings listed in the Phase II Environmental Site Assessment, the site was found to have contamination of several VOCs and traces of asbestos. As described in the Executive Summary by Langan, there are recommendations for remediation and to protect the proposed building from vapors and other environmental concerns:

- An active sub-slab depressurization system (SSDS) and a soil vapor barrier should be integrated into the new building design including integration with any proposed damp-proofing or waterproofing components of the new building design to prevent VOCs in soil vapor from entering the proposed school building.
- All material excavated during construction activities should be properly characterized and disposed of, including collection and analysis of additional samples if required by the contractor-selected disposal facilities.
- While not expected to be required, any dewatering necessary during school construction activities must be performed in accordance with applicable local, state and federal regulations. Dewatering required during construction should be minimized to mitigate potential influx of contaminated water from off-site sources toward the Site.
- If landscaped areas are incorporated into the development of the Site, any exposed soil should be covered by a minimum 2-foot thick layer of environmentally clean fill.

- Suspect ACM, LBP, PCB-containing materials, including buried structures, affected by Site development should be properly managed during construction activities. Based on the Phase II ESI results, additional investigation is not recommended for the Site.

Refer to Phase II Environmental Site Investigation Report prepared by Langan in the Appendix.

Transportation

S 2.1 Alternative Transportation, Public Transportation Access

This credit is *feasible* as the project site will comply with Option 1 of the credit.

The site is served by the MTA Bus Bx11 along East 172nd Street Jennings Street. Along East 174th Street, the Bx36 is found running in both east and west directions. On Westchester Avenue, south of the site, there is the Bx4 and Bx 27 bus lines running in both directions The 2/5 Train lines have two (2) stations within walking distance of the building, Freeman Station and 174th Street Station. South of the school, along Westchester Avenue the 6 Train Whitlock Station is located along with the Bx4/Bx4A and Bx27 bus lines running in both directions on Westchester Avenue.

Refer to S2.1 – Alternative Transportation, Public Transportation Access in Section 4 page 95.

S 2.2 Alternative Transportation, Bicycle Storage & Changing Rooms

This credit is *feasible* as the project is to provide bike storage and shower and changing facilities for bike users. As per the SCA GSG, a bike storage will be provided within the proposed building to accommodate at least 5% of all building staff and students above third grade. The shower and changing facilities in the proposed building will accommodate 0.5% of full-time equivalent (FTE) staff.

Bike Storage Calculations:

Number of full time staff: 68
Number of part time staff (20 hours / week): 5
Number of students above 3rd grade level: 110
Total number of users: 68 + 5 + 110 = **183**

Total bike spaces required as per SCA GSG (5% of total number of users): 183 (number of users) x .05 = **9.15** ≈ **9 spaces**

The size of the bicycle storage room located within the building is mandated by SCA Design Requirement 1.3.1.12, whereby new buildings shall one interior bicycle parking space for every 10,000 SF of floor area.

Required interior bicycle parking space (floor area / 10,000): 64,550 (Total Floor Area) / 10,000 = 6.45 ≈ **7 spaces**
Required interior bicycle storage area (15 SF per a bike space): 15 x 7 = **105 SF**

Proposed bicycle storage is on the first floor. It is immediately adjacent to Lobby and 50 feet from the building entrance.

Proposed interior bicycle storage area: 105 SF (per Calculation)

Thus, the proposed bicycle storage on the first floor accommodates at least 5% of building staff and students above 3rd grade.

Shower & Changing Facility Calculations:

Number of full time staff: 68
Number of part time staff (20 hours / week): 5
Number of students above 3rd grade level: 110
FTE staff: 68 + {(5 x 20)/8} = 80.5 ≈ **81**

Required numbers of showers and changing facilities: 81 x .005 = 0.405 < 1 = Therefore, **at least one shower and one changing facility** are to be provided within the propose building.

Refer to the Bike Storage and Shower Room Diagram in the following page.

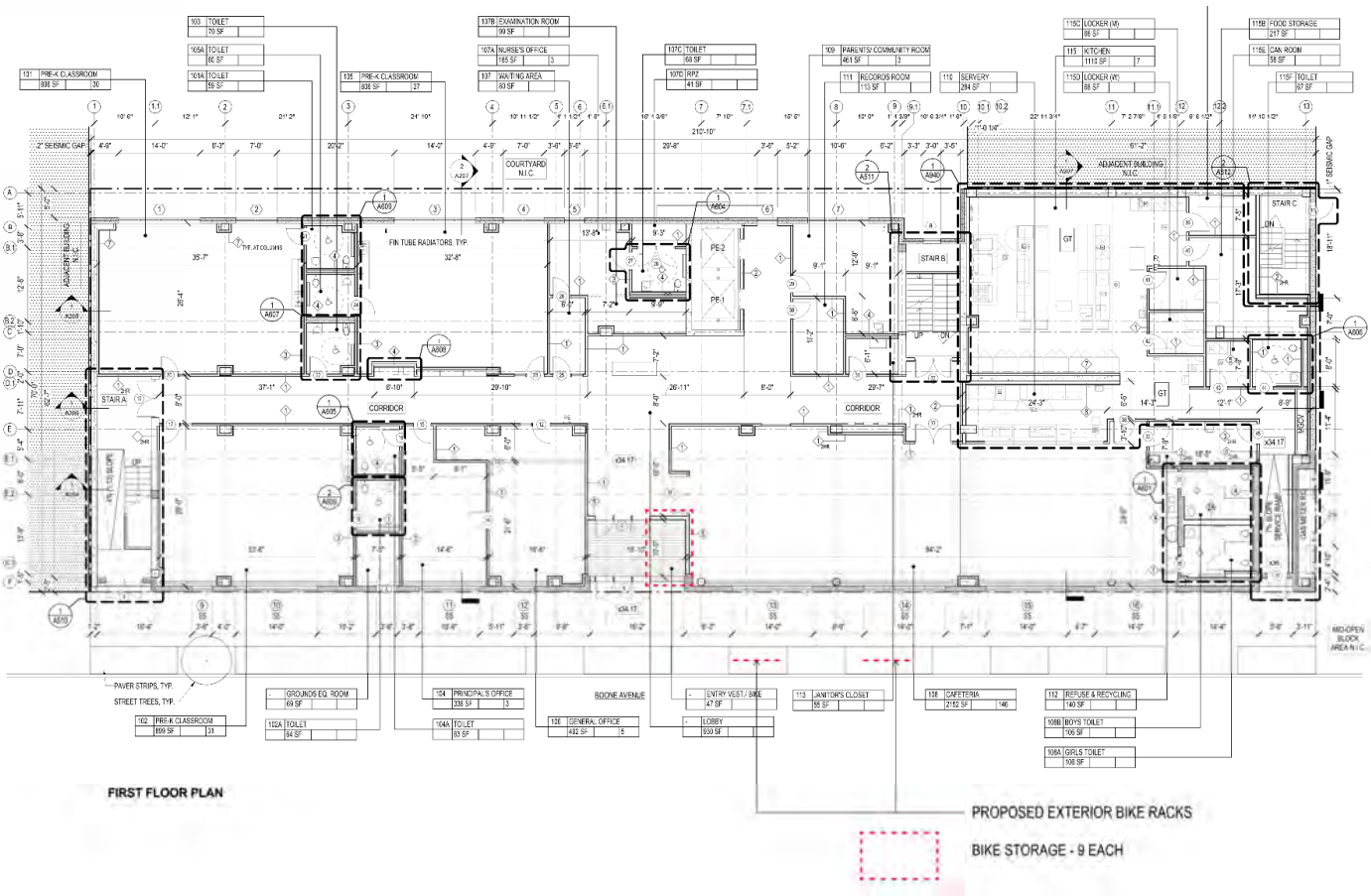

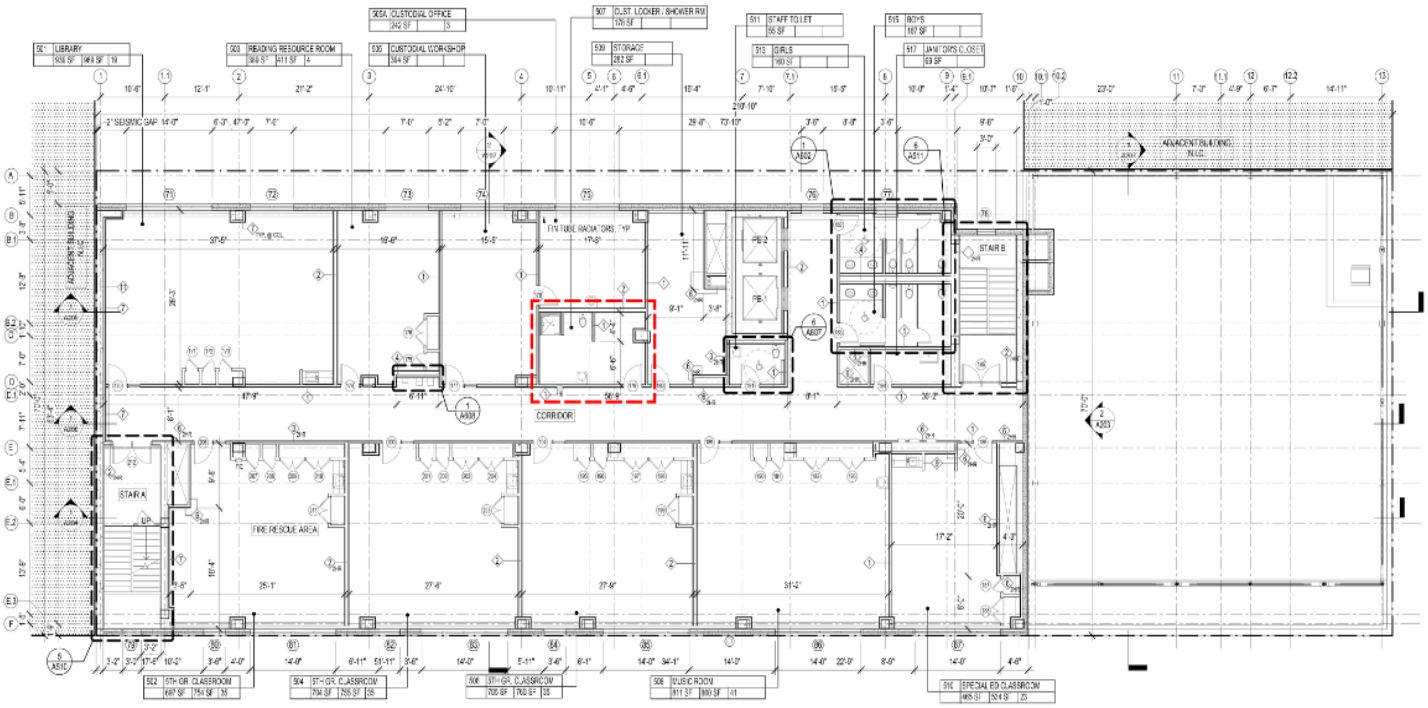

FIFTH FLOOR PLAN

SHOWER & CHANGING ROOM

S 2.3R Alternative Transportation, Fuel-Efficient Vehicles/Parking Capacity

This credit is *feasible*. No new parking will be provided as street parking is available for staff and visitors. The project will not include a parking lot.

Minimize Impact on Site

S 3.1 Site Development, Protect or Restore Habitat

This credit is *not-feasible*. As per SCA GSG, a minimum of 50% of the Site Area (excluding the building footprint) or 20% of the Total Site Area (including building footprint), whichever is greater, shall be restored or protected with native or adapted vegetation.

The calculation below is per Design Option 1. This statement is also applicable to the following S 3.2 credit and its calculation. **Refer to S3.1/S3.2 Site Development Site Plan in Section 4 page 96.**

Total Site Area (GSG Credit Site Area including sidewalks): 17,900 SF

Site Area (Total Site Area minus Building Footprint)
Building Footprint: 13,990 SF
17,900 – 13,990 = 3,910 SF

50 % of Site Area: 3,910 x .5 = 1,955 SF

20% of Total Site Area: 17,900 x .2 = 3,580 SF

20% of Total Site Area is greater than 50% of Site Area; thus, in order to earn S3.1 credit, ***3,580 SF** of native or adapted vegetation is required at minimum. Due to the site being located adjacent to a Residential development project, the proposed building will not have enough dedicated Site Area to achieve this credit. Only **781Sq.Ft.** of the site are dedicated for vegetation.*

List of Restored or Protected Vegetation:

- New and Existing Sidewalk Trees per NYC DOT Street Design Manual & NYC Parks Tree Planting Standards:
- Adapted Groundcover (*Vinca Minor*): 781 SF
- Vegetated Roof : 0 SF

Total Area with Native / Adapted Vegetation: 781 SF

781 (Proposed SF) < 3,850 (Required SF); therefore, this credit is ***not feasible***.

S 3.2 Site Development, Maximize Open Space

This credit is *feasible*. As per SCA GSG, a minimum of 20% of the Site Area (excluding the building footprint) shall be vegetated open space. In addition to the narrative below. Refer to S3.1/S3.2 Site Development Site Plan in Section 4 page 96.

List of Vegetated Open Space:

- Adapted Groundcover (*Vinca Minor*): 781 SF
- Vegetated Roof : 0 SF
- Pedestrian Oriented Hardscape with Vegetation: 0 SF (Not qualified. See the narrative and calculation below)

As per SCA GSG, if the site is located in an urban area which qualifies for S1.4 credit (Development Density and Community Connectivity), pedestrian oriented hardscape areas with vegetation can be contributed to credit compliance *if a minimum of 25% is vegetated*.

Although the project qualifies for S1.4 credit, the pedestrian sidewalk with trees cannot be counted towards Open Space as the vegetated area is only 14% of the sidewalk. See the calculation below.

Pedestrian Oriented Hardscape (Concrete Sidewalk per NYC DOT): 3,130 SF
Vegetated Area within the Hardscape: 450SF = 9 trees (5'W x 10'L = 50sf)
(450/ 3130) x 100 = 14.3% < 25% (not feasible)
211' (Street Frontage)/25' = 8.44 = 9
*Per the street frontage (tree every 25') of the site **(211')** and the SCA design requirements **9 trees** could be planted along the sidewalk. Due to the existing light pole and proposed utility vault only **6 trees** will be provided on this project. **Refer to S3.1/S3.2 Site Development Site Plan in Section 4***

As per the SCA Design Standards Trees are to be provided as per ***SCA Design Requirement 2.5.1.B.b:***

2.5.1 Trees, Shrubs, Ground Cover and Lawns

b. Street Trees One street tree, newly planted or pre-existing, shall be provided for every 25 feet of street frontage of the zoning lot. Trees shall be planted at approximately equal intervals along the entire length of the curb of the street adjacent to the zoning lot. Street trees shall be planted in the planting strips mentioned above if planting strips are required to be provided.

- Street trees: Minimum 2.5" to 3.5" caliper unless otherwise authorized by Department of Parks and recreation (DPR).
- Review New York City Parks and Recreation recommended tree list.
- Tree pits shall typically be 50 SF in area (5' wide x10' long) but can be smaller (4'x10') if sidewalk is narrow.
- The following DPR guidelines shall be followed for tree pit and tree location:
  - 20 to 30 feet between center line of trees
  - 25 feet center of tree to light poles Requirement Applies to:
  - 30 feet from tree to stop signs
  - 6 feet from tree to other traffic signs
  - 5 feet from tree to parking meters
  - 5 feet from edge of pit to hydrants
  - 2 feet from edge of pit to utilities
  - 7 feet from tree driveway or curb cut

Where street tree planting to meet the zoning requirement is infeasible on the site because of the existing infrastructures such as bus stops, hydrants, traffic signs etc., additional street trees are to be provided off site at alternative location(s) as selected by DPR.

Thus, the area with groundcover (781 SF) is the only area that will contribute to credit compliance, and it exceeds the credit requirement (at least 780 SF of vegetated open space).

Applicable SCA Design Requirements
1.1.3.1 Feasibility Study
1.3.1.1 Building Layout and Orientation

Applicable SCA Standard Specifications
None

Refer to the Vegetation and Species Diagram on the following page, updated from the last submission, species planted on the lot are indicated in the legend and required to be native or non-invasive.

Vegetation and Species Diagram:

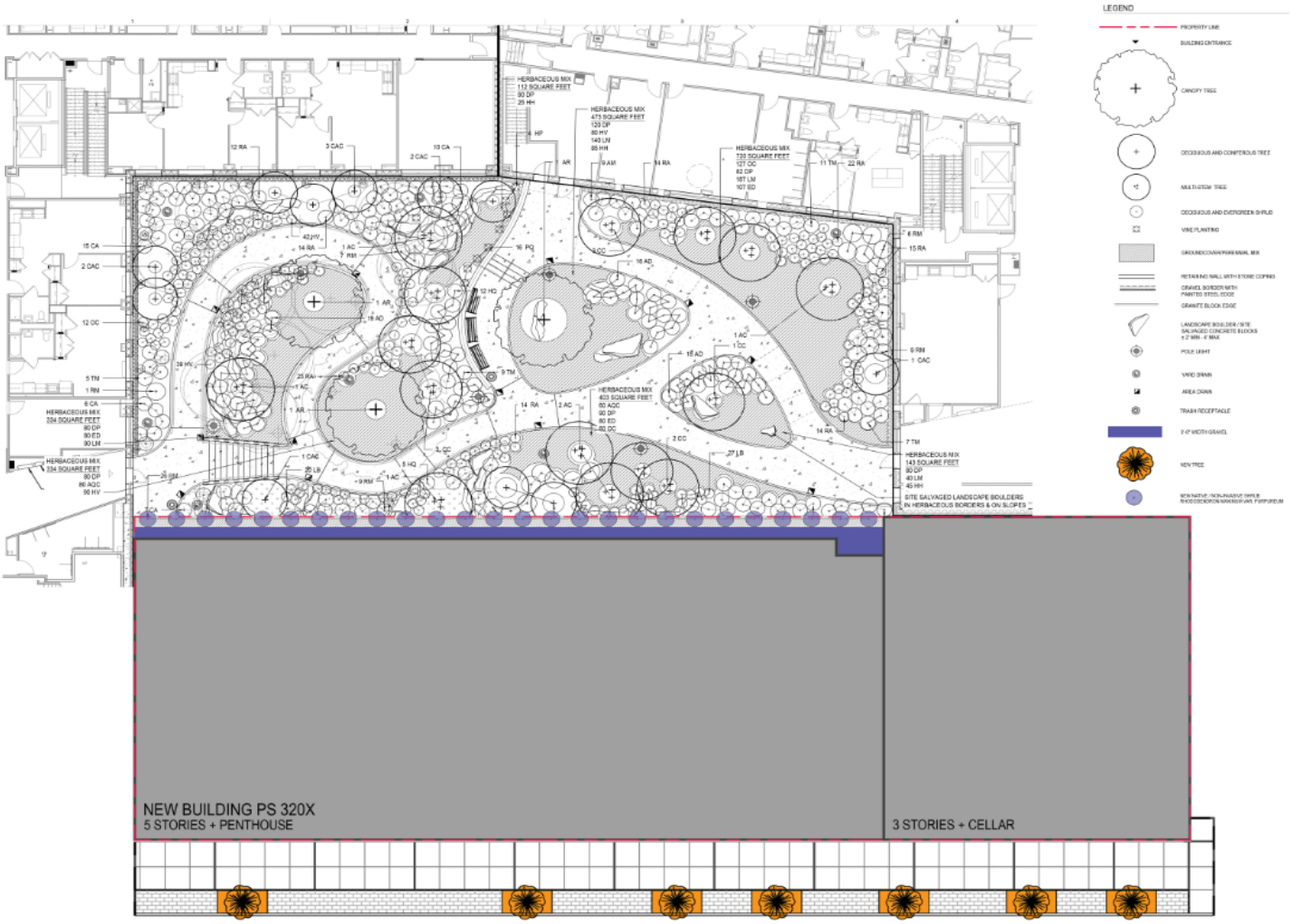

KEY	QTY	SCIENTIFIC NAME	COMMON NAME	HEIGHT	SPREAD	ROOTBALL	SPACING	COMMENTS	NATIVE
TREES									
AC	6	*AMELANCHIER CANADENSIS 'AUTUMN BRILLIANCE*	AUTUMN BRILLIANCE SERVICEBERRY	8-10' HT.	4'	B&B	AS SHOWN	MULTISTEM, 15' DIA, 20' HT.	YES
AR	3	*ACER RUBRUM 'SCARLET SENTINEL'*	SCARLET SENTINEL RED MAPLE	3-3.5" CAL.	8'	B&B	AS SHOWN	UPRIGHT CULTIVAR, 20' DIA, 40' HT.	YES
CAC	11	*CARPINUS CAROLINIANA 'PALISADE'*	PALISADE AMERICAN HOP HORNBEAM	2.5-3" CAL.	4'	B&B	AS SHOWN	UPRIGHT FORM	YES
CC	9	*CERCIS CANADENSIS VAR. 'ALBA'*	EASTERN REDBUD	7-8' HT.	4'	B&B	AS SHOWN	MULTI-STEM, WHITE FLOWERING	YES
SHRUBS									
AD	62	*AZALEA 'DELAWARE VALLEY WHITE'*	EVERGREEN AZALEA	36"	30-36"	#7 GALLON	42" O.C.	PROVIDE CULTIVAR SPECIFIED	NO-NON INVASIVE
CA	38	*CLETHRA ALNIFOLIA 'COMPACTA'*	SUMMERSWEET	36"	48"	#7 GALLON	3'-0" O.C.	MUST BE COMPACT VARIETY	YES
HP	4	*HYRDRANGEA PETIOLARIS*	CLIMBING HYRDRANGA	30-36"	CLIMBING	10 GAL	4' O.C.	FOR WALL AT LOWER COURTYARD	NO
HQ	22	*HYDRANGEA QUERCIFOLIA 'PEE WEE'*	OAKLEAF HYDRANGEA	30-36"	24-30"	B&B OR CONTR.	4'-0" O.C.	COMPACT HYDRANGEA	YES
LB	47	*LINDERA BENZOIN 'GREEN GOLD'*	SPICEBUSH	24"	24"	B&B OR CONTR.	3'-0" O.C.	PROVIDE CULTIVAR SPECIFIED	YES
RA	105	*RHUS AROMATICA 'GRO-LOW'*	FRAGRANT SUMAC	18-24"	24"	B&B OR CONTR.	3'-0" O.C.	MUST BE COMPACT VARIETY	YES
RM	66	*RHODODENDRON MAXIMUM VAR. PURPUREUM*	ROSEBAY RHODODENDRON	30-36"	36"	B&B	5'-0" O.C.	PROVIDE CULTIVAR SPECIFIED	YES
TM	46	*TAXUS X MEDIA 'EVERLOW'*	SPREADING YEW	24"-36"	12"-18"	5 GAL	3'-0" O.C.	MUST BE COMPACT VARIETY	NO-NON INVASIVE
PERENNIALS									
AQC	140	*AQUILEGIA CANADENSIS*	WILD COLUMBINE	12"	12"	1 GAL	12" O.C.	SPRING BLOOMING	YES
ED	207	*EURYDIA DIVARICATA*	WHITE WOOD ASTER	24'	24'	1 GAL	14" O.C.	FALL BLOOMING	YES
HV	250	*HEUCHERA VILLOSA 'AUTUMN BRIDE'*	HEUCHERA	24'	24'	1 GAL	14" O.C.	PROVIDE CULTIVAR SPECIFIED	YES
VINES, FERNS & GROUNDCOVERS									
DP	622	*DENNSTAEDTIA PUNCTILOBA*	HAY-SCENTED FERN	18"	18"	1 GAL	12" O.C.	MATT FORMING, INTERMIX W/ BULBS	YES
LM	367	*LIRIOPE MUSCARI 'BIG BLUE'*	LIRIOPE	4"	24"	1 GAL	14" O.C.	INTERMIX WITH BULBS	NO-NON INVASIVE
OC	47	*OSMUNDA CINNAMOMEA*	CINNAMON FERN	3'	36"	1 GAL	14" O.C.	INTERMIX WITH BULBS	YES
PQ	16	*PARTHENOCISSUS QUINQUEFOLIA*	VIRGINIA CREEPER	4"	CLIMBING	1 GAL	14" O.C.	FOR WALL	YES
BULBS									
HH	155	*HYACINTHOIDES HISPANICA*	WOOD HYACINTH	12"	12"	BULB	12" O.C.	PLANT IN DRIFTS OF 15-20	NO-NON INVASIVE
TOP MULCH									
	725 SY	COMPOST AND MULCH MIX-ACID BASED					--		N/A

STORMWATER DESIGN

S 4.1 Stormwater Design, Quality Control

This credit is *not feasible.* As per storm water design, a drywell system will not be proposed to capture storm water so that no storm water quality control measures such as filtering system are required.

Applicable SCA Design Requirements
6.1.11 Stormwater Management

Applicable SCA Standard Specifications
02723 Storm Drainage Systems

Heat Island Effect

S 5.1R Heat Island Effect, Roof

This credit is *required and feasible.* We intend to pursue Option 1: using a roof paver system with an SRI > 78 and compliant products for coated metal roofing.

Applicable SCA Specification Sections:
07560 Fluid Applied Protected Membrane Roofing

Outdoor Lighting

S 6.1 Light Pollution Reduction

Updated from the previous submission this credit is *not feasible*. The only exterior light fixtures provided for this building are code required emergency fixtures and they produce approximately 0.1 foot candles of light in the middle of Boone Street in a couple spots.

Applicable SCA Design Requirement:
7.2.1 Interior Lighting
7.2.3 Emergency Lighting
7.2.5 Exterior / Site / Security Lighting

Applicable SCA Specification Sections:
16145 Lighting Control
16502 LED Interior Building Lighting
16520 Exit Sign lights and Emergency Lighting Fixtures and Systems
16530 Site/Security Lighting

Water Credits

W 1.1 Water Efficient Landscaping, Reduce by 50%

This credit is *feasible*. There is no irrigation system proposed which requires portable water. All landscape features such as lawns, grass, and trees are to be irrigated naturally with rain fall; thus, no further calculations nor technical data needed. As per the SCA GSG, **5% of the total Building Site Area** must be allocated for vegetation. The site is 17,900 SF, 895 SF is 5% of the total site area. The project will have 1148.25 SF (including 7 tree pit areas) dedicated to vegetation and permeable surfaces at grade adjacent to the courtyard of the developer. The developer of the adjacent courtyard will be installing and maintaining this portion of the site.

Applicable SCA Design Requirement:
DR 2.5.1 Trees, Shrubs, ground Cover and Lawns

Applicable SCA Specification Sections
02900 Landscaping

Refer to the Landscape Diagram and Schedule in the following page.

W 1.2 Water Efficient Landscaping, Reduce by 100%

This credit is *feasible*. The proposed landscape design requires no portable water. See Credit W1.1 for additional information.

Applicable SCA Design Requirement:
DR 2.5.1 Trees, Shrubs, ground Cover and Lawns

Applicable SCA Specification Sections
02900 Landscaping

Refer to the Landscape Diagram and Schedule in the following page, updated from the last submission, species planted on the lot are indicated in the legend and required to be native or non-invasive.

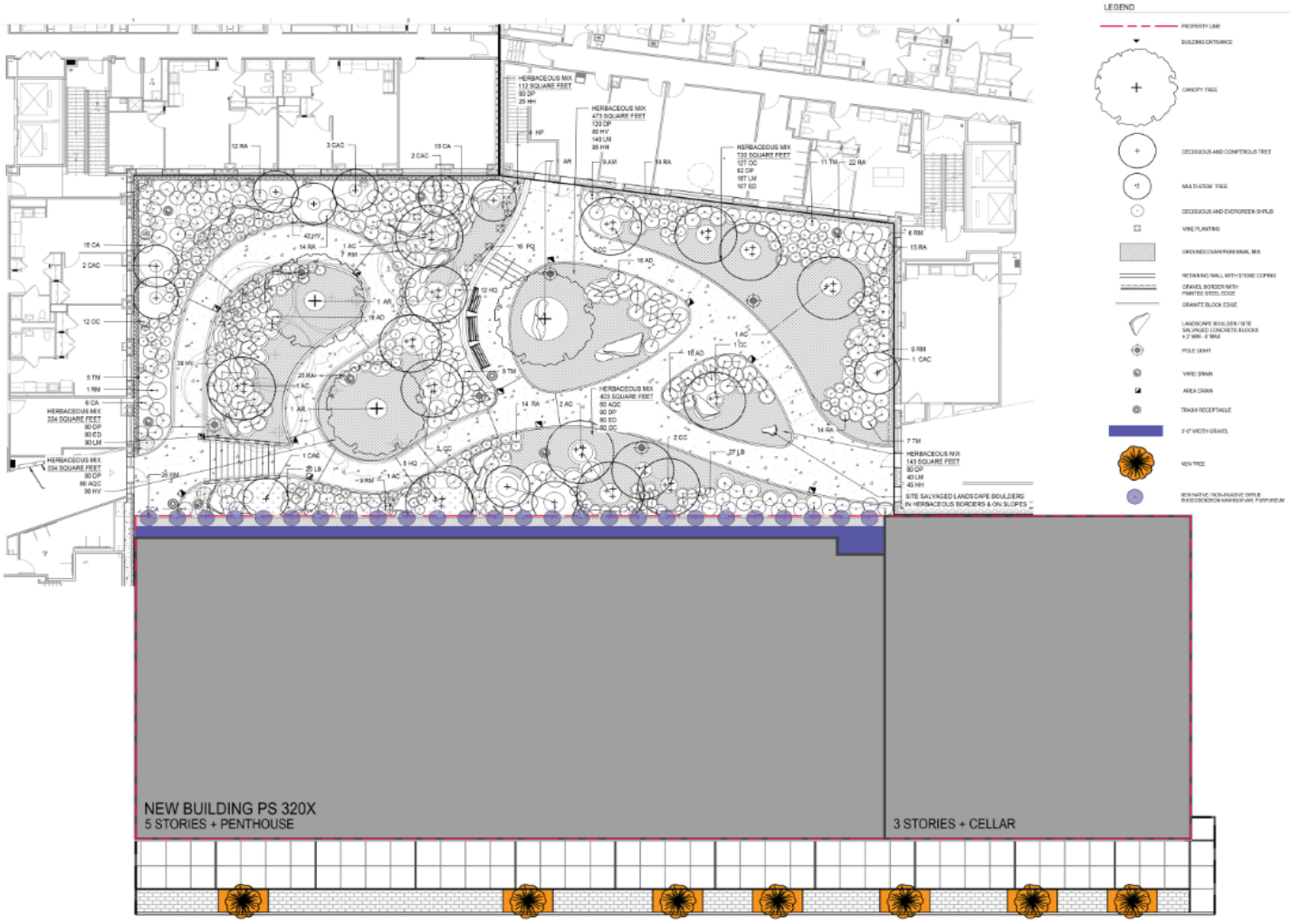

PLANTING SCHEDULE

KEY	QTY	SCIENTIFIC NAME	COMMON NAME	HEIGHT	SPREAD	ROOTBALL	SPACING	COMMENTS	NATIVE
TREES									
AC	6	*AMELANCHIER CANADENSIS 'AUTUMN BRILLIANCE*	AUTUMN BRILLIANCE SERVICEBERRY	8-10' HT.	4'	B&B	AS SHOWN	MULTISTEM, 15' DIA, 20' HT.	YES
AR	3	*ACER RUBRUM 'SCARLET SENTINEL'*	SCARLET SENTINEL RED MAPLE	3-3.5" CAL.	8'	B&B	AS SHOWN	UPRIGHT CULTIVAR, 20' DIA, 40' HT.	YES
CAC	11	*CARPINUS CAROLINIANA 'PALISADE'*	PALISADE AMERICAN HOP HORNBEAM	2.5-3" CAL.	4'	B&B	AS SHOWN	UPRIGHT FORM	YES
CC	9	*CERCIS CANADENSIS VAR. 'ALBA'*	EASTERN REDBUD	7-8' HT.	4'	B&B	AS SHOWN	MULTI-STEM, WHITE FLOWERING	YES
SHRUBS									
AD	62	*AZALEA 'DELAWARE VALLEY WHITE'*	EVERGREEN AZALEA	36"	30-36"	#7 GALLON	42" O.C.	PROVIDE CULTIVAR SPECIFIED	NO-NON INVASIVE
CA	38	*CLETHRA ALNIFOLIA 'COMPACTA'*	SUMMERSWEET	36"	48"	#7 GALLON	3'-0" O.C.	MUST BE COMPACT VARIETY	YES
HP	4	*HYRDRANGEA PETIOLARIS*	CLIMBING HYRDRANGA	30-36"	CLIMBING	10 GAL	4' O.C.	FOR WALL AT LOWER COURTYARD	NO
HQ	22	*HYDRANGEA QUERCIFOLIA 'PEE WEE'*	OAKLEAF HYDRANGEA	30-36"	24-30"	B&B OR CONTR.	4'-0" O.C.	COMPACT HYDRANGEA	YES
LB	47	*LINDERA BENZOIN 'GREEN GOLD'*	SPICEBUSH	24"	24"	B&B OR CONTR.	3'-0" O.C.	PROVIDE CULTIVAR SPECIFIED	YES
RA	105	*RHUS AROMATICA 'GRO-LOW'*	FRAGRANT SUMAC	18-24"	24"	B&B OR CONTR.	3'-0" O.C.	MUST BE COMPACT VARIETY	YES
RM	66	*RHODODENDRON MAXIMUM VAR. PURPUREUM*	ROSEBAY RHODODENDRON	30-36"	36"	B&B	5'-0" O.C.	PROVIDE CULTIVAR SPECIFIED	YES
TM	46	*TAXUS X MEDIA 'EVERLOW'*	SPREADING YEW	24"-36"	12"-18"	5 GAL	3'-0" O.C.	MUST BE COMPACT VARIETY	NO-NON INVASIVE
PERENNIALS									
AQC	140	*AQUILEGIA CANADENSIS*	WILD COLUMBINE	12"	12"	1 GAL	12" O.C.	SPRING BLOOMING	YES
ED	207	*EURYDIA DIVARICATA*	WHITE WOOD ASTER	24'	24'	1 GAL	14" O.C.	FALL BLOOMING	YES
HV	250	*HEUCHERA VILLOSA 'AUTUMN BRIDE'*	HEUCHERA	24'	24'	1 GAL	14" O.C.	PROVIDE CULTIVAR SPECIFIED	YES
VINES, FERNS & GROUNDCOVERS									
DP	622	*DENNSTAEDTIA PUNCTILOBA*	HAY-SCENTED FERN	18"	18"	1 GAL	12" O.C.	MATT FORMING, INTERMIX W/ BULBS	YES
LM	367	*LIRIOPE MUSCARI 'BIG BLUE'*	LIRIOPE	4"	24"	1 GAL	14" O.C.	INTERMIX WITH BULBS	NO NON INVASIVE
OC	47	*OSMUNDA CINNAMOMEA*	CINNAMON FERN	3'	36"	1 GAL	14" O.C.	INTERMIX WITH BULBS	YES
PQ	16	*PARTHENOCISSUS QUINQUEFOLIA*	VIRGINIA CREEPER	4"	CLIMBING	1 GAL	14" O.C.	FOR WALL	YES
BULBS									
HH	155	*HYACINTHOIDES HISPANICA*	WOOD HYACINTH	12"	12"	BULB	12" O.C.	PLANT IN DRIFTS OF 15-20	NO-NON INVASIVE
TOP MULCH									
	725 SY	COMPOST AND MULCH MIX-ACID BASED					--		N/A

Indoor Systems

W 2.1P Minimum Water Use Reduction, 20% Reduction

This credit is *anticipated and feasible*. Compliance with this credit will be achieved with the implementation of all NYCSCA standard specifications and Plumbing Requirements for high water-efficiency water closets and urinals, and metered faucets. Domestic water use calculations provided to the NYCSCA Green School Guide demonstrated that, for new buildings, the domestic water use reduction will be 30% above base design criteria when utilizing the above referenced plumbing fixtures.

Refer to Water Reduction Form following credit 2.4 Enhanced Water Use Reduction.

Applicable SCA Design Requirement:

6.1.16 Portable Water Reduction – Compliance with LL86/05

Applicable SCA Specification Sections:

11400 Food Service Equipment
15440 Plumbing Fixtures

W 2.2R Enhanced Water Use Reduction, 30% Reduction

This credit is *anticipated and feasible.* Compliance with this credit will be achieved by implementing the same practices at those described for credit W2.1P.

Refer to Water Reduction Form following credit 2.4 Enhanced Water Use Reduction.

W 2.3 Enhanced Water Use Reduction, 35% Reduction

This credit is *not feasible.* Based upon design of other SCA projects in the past.

W 2.4 Enhanced Water Use Reduction, 40% Reduction

This credit is *not feasible*. Based upon design of other SCA projects in the past.

Refer to Water Reduction Form on following page.

WATER USE REDUCTION FORM
Credits W 2.1R, W 2.2R, W2.3 & W2.4

SCA School Construction Authority
NYC Green Schools Rating System

Page 1 of 2

Project:	PS 320X - BRONX		
Address:	1570 BOONE AVENUE, BRONX NY	Zip Code:	10460
LLW:	107404		
Date:			

Engineer:	LILKER ASSOCIATES
Preparer:	JULIO CRESPO
Telephone:	212-695-1000

School in Full Operation

BASE CASE

Base Case Flush Fixture Type		% of Student Population by Grade	Daily Uses	Flow Rate [gpf]	Duration [Flush]	Student Population (Fill In Only the three Un-Shaded Boxes)	Occupant Users (Fill In Only the three Un-Shaded Boxes)	Sewage Generated [Gal] (Fill In Only the one Un-Shaded Box)
Conventional Water Closet	male 3-12	78%	1.00	1.6	1	N/A	354	566.6
Conventional Urinal	male 3-12	78%	2.00	1.0	1	N/A	354	708.2
Conventional Water Closet	female 3-12	78%	3	1.6	1	N/A	354	1699.8
Conventional Water Closet	male PK-2	22%	3.00	1.6	1	N/A	100	479.4
Conventional Water Closet	female PK-2	22%	3.00	1.6	1	N/A	100	479.4
Conventional Water Closet	Adult	N/A	3.00	1.6	1	N/A	65	312.0

Base Case Flow Fixture Type		Daily Uses	Flow Rate	Duration	Student Population	Occupant Users	Sewage Generated [Gal]
Conventional Lavatory (Student)		3	0.25 g/cycle	1 cycle	N/A	908	681.0
Conventional Lavatory (Adult)		3	0.25 g/cycle	1 cycle	N/A	65	48.8
Shower		0.1	2.5 gpm	300 sec	N/A	1	1.3
Food Service Hand Sink		4	0.25 g/cycle	1 cycle	908	9	9.1

***Base Case* "School In Full Operation" Daily Volume [Gal]**	4985.5
Annual Days School In Full Operation	180
***Base Case* Annual "School in Full Operation" Total Volume [Gal]**	***897,396***

DESIGN CASE

Design Case Flush Fixture Type		% of Student Population by Grade	Daily Uses	Flow Rate [gpf]	Duration [Flush]	POR Student Population	Occupant Users	Sewage Generated [Gal]
High Efficiency Water Closet	male 3-12	78%	1.00	1.28	1	N/A	354	453.3
High Efficiency Urinal	male 3-12	78%	2.00	0.125	1	N/A	354	88.5
High Efficiency Water Closet	female 3-12	78%	3	1.28	1	N/A	354	1359.8
High Efficiency Water Closet	male PK-2	22%	3.00	1.28	1	N/A	100	383.5
High Efficiency Water Closet	female PK-2	22%	3.00	1.28	1	N/A	100	383.5
High Efficiency Water Closet	Adult	N/A	3.00	1.28	1	N/A	65	249.6

Design Case Flow Fixture Type		Daily Uses	Flow Rate	Duration	Student Population	Occupant Users	Sewage Generated [Gal]
Aerated Lavatory with metering device (Student)		3	0.125 g/cycle	1 cycle	N/A	908	340.5
Aerated Lavatory with metering device (Adult)		3	0.125 g/cycle	1 cycle	N/A	65	24.4
Low Flow Shower		0.1	1.8 gpm	300 sec	N/A	1	0.9
Food Service Hand Sink		4	0.125 g/cycle	1 cycle	908	9	4.5

***Design Case* "School In Full Operation" Daily Volume [Gal]**	3,288.6
Annual Days School In Full Operation	180
***Design Case* "School in Full Operation" Total Volume [Gal]**	***591,951.2***
Sub-Total: Water Use Reduction for "School in Full Operation"	***34%***

Notes:

1. Figures in shaded boxes are based on EPA 1992 as amended in 2005 with revisions as per LEED 2009 (base case), SCA standards (design case) or are calculated by this spreadsheet. No design team revision required.

2. Spreadsheet will calculate occupant users for water closets and urinals for design and base cases based on figures entered by Design Team for "Occupant Users" for "Conventional Lavaratory" for students and adults, along with "% of Student Population by Grade". Distribution of male and female "Occupant USers" are based on assumption of 50-50 ratio of male and female.

3. Methodology to determine student population: Use unadjusted capacity from POR
Methodology to determine adult population: Follow DR 2.3.3.-Bicycle Racks

4. Figure entered by Design Team for occupant users for showers should include all physical education staff, potential adult bike users (GSG credit S 2.2) and for high schools with showers in the student locker rooms, all students.

5. Figure entered by Design Team to determine occupant users for "Food Service Hand Sinks" is based on 1 FTE for each 100 students. Student poplulation based on unadjusted capacity from POR is to be entered. (Minimum of 2 kitchen staff is required).

6. For "Summer Operation", occupant users is anticipated to be 30% of "Full Operation Population". If program is known to be different, actual summer population should be entered.

7. For "Annual Days of Summer Operation", revise anticipated number of days for regular summer operation, excluding weekends and days when school is closed, if program is known to be different than the default value of 30.

8. Modernization projects should include the actual fixture flow rate of fixtures to remain in the design case calculations and indicate assumptions about percentage of occupant users who will use those existing fixtures to remain.

9.Percentage of Student Population by Grade should be based on number of students in classrooms with toilets located within the classrooms. Dedicated classroom toilets would be applicable to PK and K and to first and second grade classrooms as indicated in the POR. Single user toilets are typically provided for staff use. If first and second grade don't have toilets, include poplulation in 3-12

10. For typical IS and HS, percentage of occupant users in the PK-2 row should be equal to zero.

11. For typical PS and PS/IS, percentage of occupant users in the PK-2 row should be based on occupants users in PK-2 grade classrooms that have dedicated toilets.

)/2016

WATER USE REDUCTION FORM
Credits W 2.1R, W 2.2, W2.3 & W2.4

School Construction Authority
NYC Green Schools Rating System

Page 2 of 2

Project:	PS 320X - BRONX		
Address:	1570 BOONE AVENUE, BRONX NY	Zip Code:	10,460
LLW:	107,404		
Date:			

Engineer:	LILKER ASSOCIATES
Preparer:	JULIO CRESPO
Telephone:	212-695-1000

Summer Operation

BASE CASE

Base Case Flush Fixture Type		% of Student Population by Grade	Daily Uses	Flow Rate [gpf]	Duration [Flush]	POR Student Population (Fill In Only the three Un-Shaded Boxes)	Occupant Users (Fill In Only the three Un-Shaded Boxes)	Sewage Generated [Gal] (Fill In Only the one Un-Shaded Box)
Conventional Water Closet	male 3-12	78%	1.00	1.6	1	N/A	106	170.0
Conventional Urinal	male 3-12	78%	2.00	1.0	1	N/A	106	212.5
Conventional Water Closet	female 3-12	78%	3	1.6	1	N/A	106	509.9
Conventional Water Closet	male PK-2	22%	3.00	1.6	1	N/A	30	143.8
Conventional Water Closet	female PK-2	22%	3.00	1.6	1	N/A	30	143.8
Conventional Water Closet	Adult	N/A	3.00	1.6	1	N/A	20	93.6

Base Case Flow Fixture Type		Daily Uses	Flow Rate	Duration	POR Student Population	Occupant Users	Sewage Generated [Gal]
Conventional Lavatory (Student)		3	0.25 g/cycle	1 cycle	N/A	272	204.3
Conventional Lavatory (Adult)		3	0.25 g/cycle	1 cycle	N/A	20	14.6
Shower		0.1	2.5/gpm	300 sec	N/A	0	0.4
Food Service Hand Sink		4	0.25 g/cycle	1 cycle	272	3	2.7

Base Case "Summer Operation" Daily Volume [Gal]	1,099.8
Annual Days Summer Operation	30
Base Case Annual "Summer Operation" Total Volume [Gal]	*32,993*

DESIGN CASE

Design Case Flush Fixture Type		% of Student Population by Grade	Daily Uses	Flow Rate [gpf]	Duration [Flush]	POR Student Population	Occupant Users	Sewage Generated [Gal]
High Efficiency Water Closet	male 3-12	78%	1.00	1.28	1	N/A	106	136.0
High Efficiency Urinal	male 3-12	78%	2.00	0.125	1	N/A	106	26.6
High Efficiency Water Closet	female 3-12	78%	3	1.28	1	N/A	106	407.9
High Efficiency Water Closet	male PK-2	22%	3.00	1.28	1	N/A	30	115.1
High Efficiency Water Closet	female PK-2	22%	3.00	1.28	1	N/A	30	115.1
High Efficiency Water Closet	Adult	N/A	3.00	1.28	1	N/A	20	74.9

Design Case Flow Fixture Type		Daily Uses	Flow Rate	Duration	POR Student Population	Occupant Users	Sewage Generated [Gal]
Aerated Lavatory with metering device (Student)		3	0.125 g/cycle	1 cycle	N/A	272	102.2
Aerated Lavatory with metering device (Adult)		3	0.125 g/cycle	1 cycle	N/A	20	7.3
Low Flow Shower		0.1	1.8 gpm	300 sec	N/A	0	0.3
Food Service Hand Sink		4	0.125 g/cycle	1 cycle	272	3	1.4

Design Case "Summer Operation" Daily Volume [Gal]	674.3
Annual Days Summer Operation	30
Design Case "Summer Operation" Total Volume [Gal]	*20,228.1*
Sub-Total: Water Use Reduction for "Summer Operation"	*39%*
Total Base Case "School In Full Operation & Summer Operation" [Gal]	*930,389.9*
Total Design Case "School In Full Operation & Summer Operation" [Gal]	*612,179.3*
Total Water Use Reduction	*34%*

4/30/2016

Energy Credits

E 1.1P Fundamental Commissioning of the Building Energy Systems

This credit is *required and feasible*. The project design complies with the requirements of this credit through compliance with SCA/DOE building commissioning policies. The table of Contents of the Project Specifications has provided and will be revised for the 60% CD report submission. The Specifications Table of Contents will be updated to reflect specifications sections used for this project. We anticipate the SCA to assign a commissioning agent to the project for compliance with this requirement. **A complete list of anticipated project specific Specifications is included in the Supporting Documents see page 261.**

Applicable SCA Specification Sections:

S01352	Sustainability
S01650	Facility Start-up, Demonstration, and Training
S01660	Commissioning

Refrigerant Management

E 2.1P Fundamental Refrigerant Management

This credit is *required and feasible*. No CFC-based refrigerants will be used on this project and the project does not include building demolition.

Applicable SCA Specification Sections:

11400	Food Service Equipment
15660	Packaged Modular Outdoor Chillers
15852	Air handling Units
15935	Single Zone Variable Air Volume Units for PA spaces

E 2.2 Enhanced Refrigerant Management

This credit is *feasible*. A Refrigerant Impact Form will be provided at the 60% submission, proposed 'ArtiChill' Modular Packaged chiller and split heat pumps utilize refrigerant R410A & R407C. No CFC-based refrigerants will be used on this project, and it is documented based on the Refrigerant Impact Form. The project does not include a walk-in refrigeration equipment. **Refer to the Refrigerant Impact Form on following page.**

Applicable SCA Specification Sections:

S01352	Sustainability
11400	Food Service Equipment
15660	Packaged Modular Outdoor Chillers
15783	Split Heat Pump System

REFRIGERANT IMPACT FORM
Credit E2.2

SCA School Construction Authority
NYC Green Schools Rating System

Project:	PS 320X	Engineering Firm:	LILKER ASSOCIATES CONSULTING ENGINEERS,PC
Address:	1570 BOOONE AVENUE BRONX, NY	Preparer:	LILKER ASSOCIATES CONSULTING ENGINEERS,PC
LLW #:	107404 Design #:	Telephone:	212.696.1000
Date:	6/22/2018		

The matrix below is to assist in calculating the refrigerant impact using the following calculation: **LCGWP + LCODP x 100,000 is less than or equal to 100**

Weighted average for multiple pieces of equipment: **[Σ (LCGWP + LCODP x 100,000) x Qunit] / Qtotal is less than or equal to 100**

Inputs - **Enter project specific project information in below**										Calculations - shaded cells will calculate automatically					
Description HVAC&R equipment	N No. of Units	Q unit (Tons)	Refrig-erant	GWPr	ODPr	Rc (lb/ ton)	Life (yrs)	Lr (%)	Mr (%)	Q total Tons	Tr (Lr x Life +Mr)	LCGWP (GWPr x Tr x Rc/Life)	LCODP x 10000	RAI = LCGWP+ LCODPx 100000	(LCGWP + LCODP x 100000) x Qtotal
CH-1	1	216	R410a	1,890	0	1.5	20	2.0%	10%	216	50%	70.9	0	70.9	15309
AC-1/ACCU-1	1	3	R410a	1,890	0	2	15	2.0%	10%	3	40%	100.8	0	100.8	302
AC-2/ACCU-2	1	3	R410a	1,890	0	2	15	2.0%	10%	3	40%	100.8	0	100.8	302
AC-3/ACCU-3	1	3	R410a	1,890	0	2	15	2.0%	10%	3	40%	100.8	0	100.8	302
AC-4/ACCU-4	1	2	R410a	1,890	0	2	15	2.0%	10%	2	40%	100.8	0	100.8	202
			R22	1,780	0.04	2.1	10	2.0%	10%	0	30%	112.1	25.2	137.3	0
										227				Subtotal =	16418
														Weighted Average Atmospheric Impact [Σ (LCGWP + LCODP x 100,000) x Qunit] / Qtotal =	72.3

Definitions:

LCGWP: Lifecycle Direct Global Warming Potential (lbCFC11.Ton-Year) = [GWPr x (Lr x life + Mr) x Rc]/life
LCODP: Lifecycle Ozone Depletion Potential (lbCFC11.Ton-Year) = [ODPr x (Lr x life + Mr) x Rc]/life
GWPr: Global Warming Potential of Refrigerant (0 to 12,000 lbCO2/lbr). See on following page.
ODPr: Ozone Depletion Potential of Refrigerant (0 to .2lbCFC11/lbr). See on following page.
Q unit: Cooling capacity of an individual HVAC or refrigeration unit in tons.
Rc: ACTUAL Refrigerant Charge (0.5 to 5.0 lbs of refrigerant per ton of mechanical-cooling capacity)
Life: Equipment Life (based on equipment type, 15 years unless otherwise demonstrated)
Lr: Refrigerant Leakage Rate (0.5% to 2%; default of 2% unless otherwise demonstrated)
Mr: End-of-life Refrigerant Loss (2% to 10%; default of 10% unless otherwise demonstrated)
Q total: Total mechanical-cooling capacity for a given type of HVAC or refrigeration unit on the project.
RAI: Refrigerant Atmosheric Impact

Ozone-depletion and global-warming potentials of refrigerants (100-yr values)

Refrigerant		ODP	GWP	Common Building Application
Chlorofluorocarbons	CFC-11	1.0	4,680	Centrifugal chillers
	CFC-12	1.0	10,720	Refrigerators, chillers
	CFC-114	0.94	9,800	Centrifugal chillers
	CFC-500	0.605	7,900	Centrifugal chillers, humidifiers
	CFC-502	0.221	4,600	Low-temperature refrigeration
Hydrochloroflurocarbons	HCFC-22	0.04	1,780	Air conditioning, chillers,
	HCFC-123	0.02	76	CFC-11 replacement
Hydrofluorocarbons	HFC-23	~0	12,240	Ultra-low-temperature refrigeration
	HFC-134a	~0	1,320	CFC-12 or HCFC-22 replacement
	HFC-245fa	~0	1,020	Insulation agent, centrifugal chillers
	HFC-404A	~0	3,900	Low-temperature refirifugal chillers
	HFC-407C	~0	1,700	Low-temperature refrigeration
	HFC-410A	~0	1,890	HCFC-22 replacement
	HFC-507A	~0	3,900	Air conditioning
Natural Refrigerants	Carbon Dioxide (CO2)	0	1.0	
	Ammonia (NH3)	0	0	
	Propane	0	3	

Default Maximum Allowable Equipment Refrigerant Charge (lb/ton)

Refrigerant	10 Year Life	15 Year Life	20 Year Life	23 Year Life
	(Room or window AC & heat pumps)	(Unitary, split and packaged AC and heat pumps)	(Reciprocating compressors & chillers)	(Centrifugal, Screw & Absorption Chillers)
R-22	0.57	0.64	0.69	0.71
R-123	1.60	1.80	1.92	1.97
R-134a	2.52	2.80	3.03	3.10
R-245fa	3.26	3.60	3.92	4.02
R-407c	1.95	2.20	2.35	2.41
R-410a	1.76	1.98	2.11	2.17

4/30/2016

Measurement & Verification

E 3.1R Measurement and Verification

This credit is *required and feasible*. The Building Management System (BMS) for the school will measure and monitor gas, normal electrical power, and chilled water plus the electrical power consumption by lighting panels and receptacle panels, chilled water pumps, hot water pumps, and air handling units. Additionally, the project has been designed to meet the SCA design requirements of section 6.2.20 Building Management Control System / Direct Digital Control BMS/DDC. The project is to include sub-meters for the water heater and separate sub-meter for the boilers. **Refer to Section 4 Selected Mechanical Drawings M404 through M416 on Page 241-260.**

Applicable SCA Design Requirement:
6.2.20 Building Management Control System / Direct Digital Control BMS/DDC

Applicable SCA Specification Sections:
15416 Gas Piping System
15970 Temperature Control System (LonWorks BMS/DDC with School Operating Console)
15973 Facility Management Systems Integration
15985 Sequence of Operations
16420 Service Entrance equipment

E 3.2R Energy Management System Controls, HVAC and Hot Water Systems

This credit is *feasible*. The new building will be provided with Building Management System (BMS) that will be connected to the NYC DOE Wide Area Internet Network (WAN). This connection allows complete monitoring and control of the school's MEP systems from both the local and BMS station in the Custodian's Office as well as the DIIT central monitoring and control station located at 2 Metro Tech Brooklyn, NY. **Refer to Section 4 Selected Mechanical Drawings M404 through M416 on Page 241-260.**

Applicable SCA Design Requirement:
6.2.20 Building Management Control System / Direct Digital Control BMS/DDC

Applicable SCA Specification Sections:
15970 Temperature Control System (LonWorks BMS/DDC with School Operating Console)
15973 Facility Management Systems Integration
15985 Sequence of Operations

Energy Efficiency

E 4.1P Minimum Energy Performance

This credit is *required and feasible*. A project Specific Energy Model has been provided in this report.

The HVAC design for the new building will utilize rooftop Air handling unit units with chilled water and hot water coils, gas-fired hot water condensing boilers, hot water perimeter heating and non-fan powered VAV boxes as required by the NYC Schools Green Guidelines and SCA standards.

For lighting, occupancy, vacancy and daylight harvesting sensors will be provided for control of lights in offices. Staircase, multi-user student toilets and non-emergency corridor lighting fixtures will have integral occupancy sensors. The power densities for lighting layouts will be design to comply with the New York City SCA electrical Design Requirement 7.2.1.

The energy model included in this report demonstrates that the new school X320 achieves total energy cost savings over 30% of ASHRAE 90.1-2010.

Applicable SCA Design Requirement:

1.1.5.2	Building Areas – Energy Saving & Non-Energy Saving Spaces
4.2.1	Exterior Masonry Wall
6.2.0	General Overview of HVAC
6.2.3	Non-Assembly Spaces
6.2.4	Public Assembly Spaces
6.2.9	Convectors and Enclosures
6.2.20	BMS/DDC Controls
7.2.1	Interior Lighting
7.2.5	Exterior/Site/Security Lighting

Applicable SCA Specification Sections:

15540	HVAC Pumps
15565	Condensing Boilers
15783	Split Heat Pump System
15852	Air handling Units
15935	Single Zone Variable Air Volume Units for PA spaces
15970	Temperature Control System
15973	FMS Integration
15985	Sequence of Operations
16145	Lighting Control Devices
16502	LED Interior Building Lighting
16530	Site/Security Lighting

Refer to Lighting Density Diagrams for each room in Supporting Documents on Page 97.
Refer to Energy Model Report, Baseline Input-Output and Checklist in the Supporting Documents on Page 285.

E 4.2R HVAC System Sizing, Avoid Oversizing

This credit is *required and feasible*. HVAC system and its components will be sized and configured to efficiently handle space peak and design loads based on interior space ambient temperature of 72 degrees F and outdoor condition of 11 degrees F Dry Bulb with 15 MPH wind speed in winter 78 degrees F in summer with 89 degrees F outdoor condition. For assembly spaces, summer 78 degrees F Dry Bulb/50% Relative Humidity and 72 degrees Dry Bulb in the winter. The designed system will operate in an energy efficient manner during a wide range of partial load conditions, which are the operating ranges that HVAC systems handle most of the time. However, HVAC system will not be sized too tight that there is no allowances for potential future growth and degradation of the HVAC system components.

Refer to Mechanical Load Calculations and Major Equipment Cut Sheets report in the Supporting Documents on Page 133.

Applicable SCA Design Requirement:

6.2.9	Heating and Cooling Design Parameters (Load Calculations)
6.2.13	Arrangement and Sizing of Equipment
6.2.34	Verification of Air System Design

Applicable SCA Specification Sections:

15540	HVAC Pumps
15565	Condensing Boilers
15660	Packaged Modular Outdoor Chillers
15783	Split Heat Pump System
15852	Air handling Units
15935	Single Zone Variable Air Volume Units for PA spaces

Power

E 5.1R Green Power

This credit is *required and feasible* by pursuing the SCA's required approach for achieving this credit: engaging in a renewable energy contract for a minimum of two years to provide at least 35% of the building's electricity from renewable sources. Energy Model is included in this submission and the application will be submitted once construction had begun per the SCA's standard application process.

Refer to Energy Model Report, Baseline Input-Output and Checklist in the Supporting Documents on Page 285.

Applicable SCA Design Requirements
None

Applicable SCA Standard Specifications
None

Materials

M 1.1P Storage and Collection of Recyclables

This credit is *required and feasible*. Recycling and storage will be handled by the Custodial Staff for PS320X. FF&E and custodial staff will ensure that appropriate quantities of utility carts and recycling containers are on the purchase list.

Applicable SCA Design Requirement:
DR 1.3.1.2 Building Organization – Space Relationships
DR 1.3.1.8 Refuse and Recycling Storage
DR 1.3.5.01 Cafeteria PK-8

Applicable SCA Specification Sections:
11172 Waste Handling Equipment

Refer to Partial Plan indicting Recycling Areas on the following page.

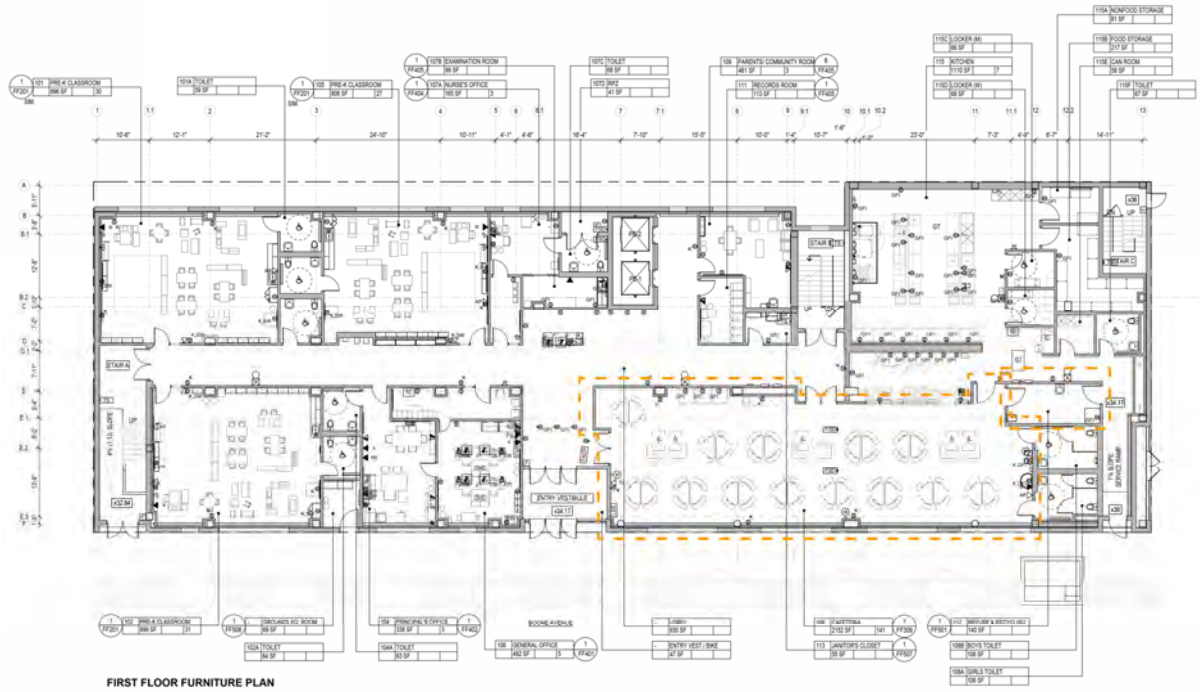

FIRST FLOOR FURNITURE PLAN

M

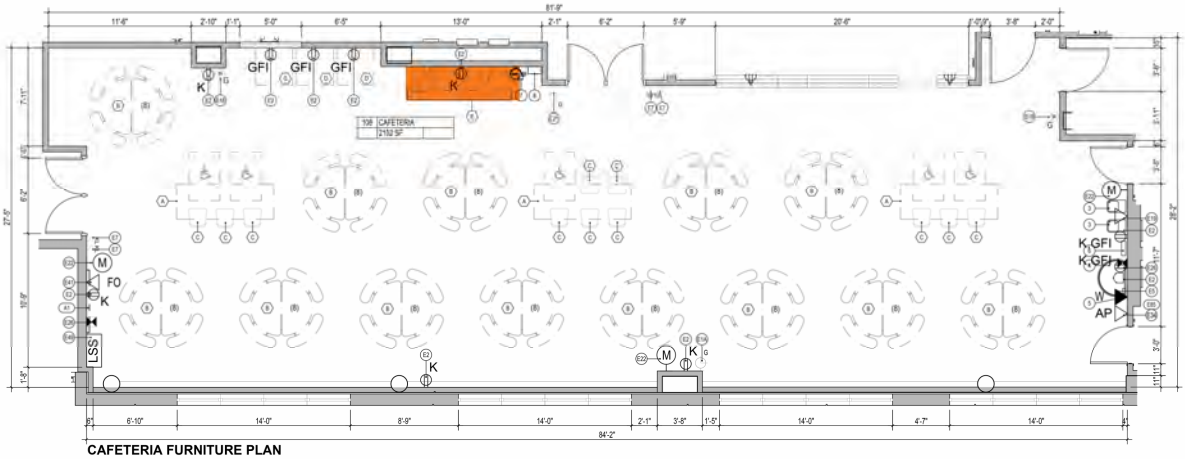

CAFETERIA FURNITURE PLAN

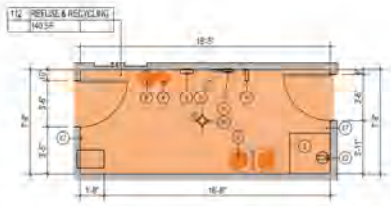

REFUSE AND RECYCLING FURNITURE PLAN

OWNER PROVIDED AND INSTALLED ITEMS				
ITEM NO.	ITEM REF.	DESCRIPTION	SIZE	QTY
A	UE061	RECYCLE CAN	-	1
B	UE060	GARBAGE CAN	-	1
C	UE062	TRASH CAN DOLLY	45"Lx20 1/4"Wx8"H	1
E		WASTE COMPOSING/RECYCLING/TRASH CENTER	32 GAL. TRASH CONTAINERS + LIQUID WASTE CONTAINER ON TABLE TOP	4

1.2 Building Reuse, Maintain 75% of Existing Walls, Floor & Roof

This credit is *not feasible* as the building is new construction.

M 1.3 Building Reuse, Maintain 95% of Existing Walls, Floor & Roof

This credit is *not feasible* as the building is new construction.

M 1.4 Building Reuse, Maintain Interior Non-structural Elements

This credit is *not feasible* as the building is new construction.

M 1.5R Construction Waste Management, Divert 50% from Disposal

This credit is *required and feasible*: the project will follow SCA specifications to achieve waste management requirements. As this building is a new construction, no building structure or non-structure items can be re-used.

Applicable SCA Specification Sections:

S01352	Sustainability
S01524	Construction Waste Management

M 1.6 Construction Waste Management, Divert 75% from Disposal

This credit is *feasible*: the project will follow SCA specifications to achieve waste management requirements. As this building is a new construction, no building structure or non-structure items can be re-used.

Applicable SCA Specification Sections:

S01352	Sustainability
S01524	Construction Waste Management

M 1.7 Construction Waste Management, Divert 90% from Disposal

This credit is *anticipated and feasible*: the project will follow SCA specifications to achieve waste management requirements. As this building is a new construction, no building structure or non-structure items can be re-used.

Applicable SCA Specification Sections:

S01352	Sustainability
S01524	Construction Waste Management

Sustainable Materials

M 2.1R Recycled Content, 10% (post-consumer)

This credit is *required and feasible.* We will specify materials with recycled content such that the sum of post-consumer recycled content plus one-half of the recycled content constitutes 10% (based on cost) of the total value of materials in the project.

Applicable SCA Specification Sections:

S01352	Sustainability
02200	Earthwork
02513	Sidewalk and Street Paving
03200A	Concrete Reinforcement
03300	Cast-in-Place Concrete
05120	Structural Steel
05300	Metal Deck
05710	Steel Stairs

07211	Perimeter Foundation Insulation
07212	Miscellaneous Building Insulation
07560	Fluid-applied Protected Membrane Roofing
08110	Steel Doors and Frames
08330	Coiling Doors, Grilles and Shutters
08524	Aluminum Projected Windows
08662	Security Screens/Barriers
09260	Gypsum Board Assemblies
09310	Ceramic Tile
09510	Acoustic Ceilings
09650	Resilient Flooring
10151	Toilet Compartments
10350	Flagpole
10505	Metal Lockers

M 2.2R Recycled Content, 20% (post-consumer)

This credit is *anticipated and feasible*. We will specify materials with recycled content such that the sum of post-consumer recycled content plus one-half of the recycled content constitutes 20% (based on cost) of the total value of materials in the project.

The Design Team will monitor and verify compliance during construction through review contractor's submittals.

Applicable SCA Specification Sections:
See response to M2.1R above

M 2.3 Regional Materials, 10% Extracted, Processed & Manufactured

This credit is *anticipated and feasible*: it will be achieved by verifying building materials and products that have been extracted, harvested, or recovered, as well as manufactured, within 500 miles of the project site for a minimum of 10% (based on cost) of the total value of materials in the project. The design team will verify regional materials.

Applicable SCA Specification Sections:
02200 Earthwork
02513 Sidewalk and Street paving
02900 Landscaping
03300 Cast-in-Place Concrete
05120 Structural Steel
05300 Metal Deck
09260 Gypsum Board Assemblies
09310 Ceramic Tile

M 2.4 Regional Materials, 20% Extracted, Processed & Manufactured

This credit is *anticipated and feasible*: it will be achieved by using building materials and products that have been extracted, harvested, or recovered, as well as manufactured, within 500 miles of the project site for a minimum of 10% (based on cost) of the total value of materials in the project. We will include the sustainability requirements in the respective specifications.

Applicable SCA Specification Sections:

See response to M2.3 above

M 2.5R Wallboard & Roof Deck Products, Mold Resistance

This credit is *required and feasible*. The building envelope's design incorporates mold-resistant materials. The roof will be constructed of concrete slab and composite roof (concrete on metal deck).

Applicable SCA Specification Sections:

S01352	Sustainability
06100	Rough Carpentry
07212	Miscellaneous Building Insulation
09260	Gypsum Board Assemblies

Indoor Environmental Quality

Q 1.1P Minimum IAQ Performance

This credit is *required and anticipated*. The building is designed based on mechanical ventilation and will meet the minimum requirements of Section 4 through 7 of ASHRAE 62.1-2007 ventilation for acceptable interior air quality. HVAC system will be designed to handle outdoor air quantity at a minimum as required by ASHRAE 62.1-2007. Demand ventilation using CO2 sensor will be installed in PA spaces only.
VAV boxes and occupancy sensors will be installed in classroom.

Refer to ASHRAE Outside Air Assessment Report in the Supporting Documents on Page 105.
Refer to Section 4 Selected Mechanical Drawings M001, M003 through M005 on Page 241-260.

Applicable SCA Design Requirement:

6.2.0	General Overview of Heating Ventilation and Air Conditioning Systems
6.2.1	HVAC Unit Centralization and Coordination
6.2.3	Non-Assembly Spaces (Classrooms, Offices, etc.)
6.2.4	Public Assembly Spaces
6.2.9	Heating and Cooling Design Parameters (Load Calculation)

Applicable SCA Specification Sections:

S01550	Indoor Air Quality Requirements
15852	Air handling Units
15935	Single Zone Variable Air Volume Units for PA spaces
15985	Sequence of Operations
15992	Cleaning and Testing
15993	Balancing of Systems

IAQ Post-Occupancy

Q 1.2R Outdoor Air Delivery Monitoring AIR FLOW STATIONS, OUTSIDE AIR INTAKE

This credit is *feasible and anticipated*. The central ventilation system (rooftop HVAC units) for the building will be provided with air flow measuring station at the outside air intakes in order to measure and monitor the outside air supplied to the school. Data for outside air measurement will be available for verification at the school level through BMS system schools operating console in the Custodian's Office or through the DOE centralized host control station for Automatic Temperature Control of School in NYC. **Refer to Selected Mechanical Drawings I M404 through M416 in the Supporting Documents on Page 241-260.**

Applicable SCA Design Requirement:

6.2.0	General Overview of Heating Ventilation and Air Conditioning Systems
6.2.1	HVAC Unit Centralization and Coordination
6.2.3	Non-Assembly Spaces (Classrooms, Offices, etc.)
6.2.4	Public Assembly Spaces
6.2.9	Heating and Cooling Design Parameters (Load Calculations)

Applicable SCA Specification Sections:

15970	Temperature Control System (LonWorks BMS/DDC with School Operating Console)
15985	Sequence of Operations

IAQ Pre-Occupancy

Q 2.1R Construction IAQ Management Plan, During Construction

This credit is *required and feasible*. The specifications will require that the Sheet Metal and Air Conditioning Contractors National Association (SMACNA) IAQ Guidelines for Occupied Buildings under Construction, Second edition 2007 version, Chapter 3, shall be incorporated in the General Contractor's IAQ plan. In addition the General Contractor shall develop and implement a dust control plan to minimize the particulate matter in the air and from potential mold growth.

Applicable SCA Specification Sections:

G01700	Project Closeout
S01550	Indoor Air Quality Requirements
S01560	Installation Sequence of Finish

Materials

Q 2.2R Construction IAQ Management Plan, Before Occupancy

This credit is *required and feasible*. The contractor will be required to operate the central ventilation system for the building prior to occupancy of school until all areas of the school receive 14,000 cubic feet of outside air per square feet maintaining an internal temperature higher than 60°F Dry Bulb and relative humidity no higher than 60%. The volume of outside and indoor temperature and humidity conditions will be measured and monitored by the BMS system. The central ventilation units will continue operating at the maximum of .30 cubic feet per minute square foot outside air intake after the school is occupied or that required by code, until all spaces of the school receive a total 14,000 cubic feet of outside air per square feet of Floor Area of the building. After complying with this requirement, all ventilation system will operate in normal mode.

Applicable SCA Specification Sections:

G01700	Project Closeout
S01352	Sustainability
S01550	Indoor Air Quality Requirements

Low-Emitting Materials

Q 3.1R Low Emitting Materials, Adhesives & Sealants

This credit is *required and feasible*: it will be achieved by using only low-emitting adhesives and sealants that comply with the VOC limits listed in SCA standard specification G01600 Materials and Equipment on the interior of the building.

Applicable SCA Standard Specifications

S01352	Sustainability
G01600	Material and Equipment

06100	Rough Carpentry
06200	Finish Carpentry
06410	Custom Casework
07900	Joint Sealers
08210	Wood Doors
08524	Aluminum Projected Windows
08800	Miscellaneous Glazing
08920	Aluminum Curtain Walls
09260	Gypsum Board Assemblies
09310	Ceramic Tile
09510	Acoustical Ceilings
09650	Resilient Flooring
10100	Visual Display Boards
10400	Identifying Devices
10415	Bulletin Boards, Glazed Display Boards, Display Cabinets and Cases
10830	Mirrors
Div 15	All HVAC and P&D adhesives and sealers

Q 3.2R Low Emitting Materials, Paints & Coatings

This credit is *required and feasible*: it will be achieved by using only low-emitting adhesives and sealants that comply with the VOC limits listed in SCA standard specification G01600 Materials and Equipment on the interior of the building. SCA Specification 09900 Painting is also applicable.

The Design Team will monitor compliance during construction through review of contractor's submittals and include VOC information on the Low-Emitting Material-Summary Form.

Applicable SCA Specification Sections:

S01352	Sustainability
G01600	Material and Equipment
09626	Resilient Athletic Flooring
09675	Fluid-Applied Equipment Room Flooring
09900	Painting
Div 15	All HVAC and P&D adhesive and sealers

Q 3.3R Low Emitting Materials, Flooring Systems

This credit is *required and feasible*. All resilient, wood, and ceramic flooring and wall base products will be FloorScore certified. All floor finishes will meet SCAQMD Rule #1113. Tile adhesives and grout will meet SCAQMD Rule #1168. Alternately, all flooring products will meet the requirements of the California Department of Public Health Standard Practice for the Testing of Volatile Organic Emissions Form Various Sources Using Small-Scale Environmental Chambers, including 2004 Agenda.

The Design Team will monitor compliance during construction through review of contractor's submittals and include VOC information on the Low-Emitting Material-Summary Form.

Applicable SCA Specification Sections:

S01352	Sustainability
G01600	Material and Equipment
09310	Ceramic Tile
09590	Wood Flooring
09650	Resilient Flooring

Q 3.4R Low Emitting Materials, Comp Wood & Agrifiber Products

This credit is *required and feasible*. All composite wood and Agrifiber products and related adhesives used on the interior of the building, including casework, millwork, plywood subflooring, wood doors and mounting boards for MEP panels, shall contain no added urea-formaldehyde resins.

The Design Team will monitor compliance during construction through review of contractor's submittals and include the appropriate information on the Low-Emitting Material-Summary Form.

Applicable SCA Specification Sections:

S01352	Sustainability
06100	Rough Carpentry
06200	Finish Carpentry
06410	Custom Casework
08211	Wood Doors
09590	Wood Flooring
10415	Bulletin Boards
12711	Telescoping Seating

Applicable SCA Standard Details:

06200	Finish Carpentry
06410	Custom Casework

Pollution Source Control

Q 4.1R Indoor Chemical & Pollutant Source Control

This credit is *required and feasible*. The project will comply with the requirements of this credit by designing according to Design Requirements and Specifications listed below. Specifically a 10' long entryway foot grille will be provided as per specification section 12485 at the all entrances into the building. The central rooftop HVAC units for the building will be provided with pre-filters having a Minimum Efficiency Reporting Value (MERV) of 7 and final filters having a MERV of 13. In addition, Janitors' Closets and Storage Rooms will be provided with exhaust systems that will maintain those areas under negative air balance; therefore, prevent the outflow of room contaminants into other areas of the school.

Applicable SCA Design Requirement:

1.3.4.1	Entrances and Exits
6.2.0	General Overview of Heating Ventilation and Air Conditioning Systems
6.2.28	HVAC Design Requirements for Special Spaces

Applicable SCA Specification Sections:

12485	Foot Grilles
15852	Air Handling Units
15935	Single Zone Variable Air Volume Units for PA spaces

Q 4.2R Electric Ignition Stoves

This credit is *feasible* as there will be an Electric Ignition proposed at the Kitchen Gas stove proposed for the school.

Applicable SCA Design Requirement:

7.3.13	Carbon Monoxide Detection and Alarm Systems

Applicable SCA Specification Sections:
11400 Food Service Equipment
15416 Gas Piping System

Q 4.3R Provide HEPA Vacuums (Post Construction Indoor Air Quality)

This credit is *feasible* by obtaining a written statement from the SCA/F&E Unit to confirm that HEPA vacuums are included in this project's equipment list.

Controllability of Systems

Q 5.1R Controllability of Systems, Lighting

This credit is *required and feasible*. All interior lighting shall automatically be controlled by a programmable Lighting Control Panel with integral clock except for the emergency lighting. The Lighting Control Panel shall be provided adjacent to and connected to the local Lighting Panels for automatic lighting shut-off.

The following table, **revised from the last submission,** provides individual controls for each space to be used and is in keeping with the NYC Energy Code.

Each area enclosed by walls or floor-to ceiling partitions shall have at least one switch to control the lighting within. **Also refer to lighting floor plans on page 109-116.**

Area	Local Manual Control/Switch	Local Automatic Control/Sensor	Comments
Classrooms/offices			
K-5	Low-voltage 3-Button Dimmer Switch	Vacancy sensor/Daylight Harvesting Sensor	Ceiling mounted sensor
Community Rooms	Low-voltage 3-Button Dimmer Switch	Vacancy sensor/Daylight Harvesting Sensor	Ceiling mounted sensor.
Large offices	Low-voltage 3-Button Dimmer Switch	Vacancy sensor/Daylight Harvesting Sensor	Ceiling mounted sensor.
Individual offices	Low-voltage switch	Vacancy sensor/Daylight Harvesting Sensor	Ceiling mounted sensor
Gymatorium			
General Lighting	Three-way dimming key pad	Vacancy Sensor/Daylight Harvesting Sensor	Three-way dimming keypad to control house lighting to be located at the entrance and stage. Ceiling mounted sensors.
Stage Area	Toggle Switch	Not required	Switches to control non-theatrical stage lights to be located at the stage
Cafeteria/Lunch Room			
General Lighting, Emergency Circuit	Key-operated line voltage switch	Not required	Switch at one entrances to turn on emergency lights that will also provide minimal entry/circulation illumination. Circuiting for lights to allow them to turn on upon loss of

			power if they are turned off.
General Lighting, non-emergency circuit	Key-operated low voltage switch	Occupancy sensor	Switches for general lighting to be located at same entrance as emergency lighting switch. Ceiling/corner/fixture mounted sensors depending on fixture height and required coverage.
Kitchen	Toggle switch	Not required	
Library			
General	Three way low-voltage switch	Vacancy sensor	Three-way switches at entrance and at Librarian desk. Ceiling mounted sensor.
Service/Utilities			
Electric closets	Toggle Switch	Not required	
Elevator machine Room	Toggle switch	Not required	
Janitor closet	Low voltage switch	Vacancy Sensor	Wall mounted sensor/switch
Mechanical Areas-Service areas	Toggle switch	Not required	
Storage rooms	Low-voltage switch	Vacancy sensor	Wall mounted sensor-switch
Switchboard room	Toggle switch	Not required	
Telecom room	Low-voltage switch	Vacancy sensor	Wall mounted sensor/switch
Circulation Areas			
Lobby	Key-operated switches	Occupancy Sensor	Key operated switch located at main entrance for emergency lighting. Ceiling mounted sensor(s) for non-emergency lighting luminaires.
Corridors	Key operated switch	Occupancy Sensor. Fixtures by windows to have built-in daylight sensor.	Key operated switch located at main entrance for emergency lighting. Ceiling mounted sensor(s) for non-

			emergency lighting luminaires.
Stairs	Key-operated switch	Built-in occupancy sensor in each luminaire	Key operated switch at main entrance. Normally at 50% power level. Turns to 100% on motion.
Physical Education			
Exercise Rooms	Low-voltage switch	Vacancy sensor	Ceiling-mounted sensor.
Toilets			
Staff Toilet (single-user)	Line-voltage switch	Occupancy sensor	Wall-mounted sensor/switch.
Student (multi-user) toilets	Key operated switch	Built-in occupancy sensor in each luminaire	Normally at 50% power level. Turns to 100% on motion.
Student Classroom Toilets	Line-voltage switch	Occupancy sensor	Wall-mounted sensor/switch.

Applicable SCA Design Requirement:
7.2.1 Interior Lighting

Applicable SCA Specification Sections:
16140 Wiring Devices
16145 Lighting Control Devices

Q 5.2R Controllability of Systems, Thermal Comfort

This credit is *required and anticipated*. All individual classrooms, offices, and assembly areas in the building will be provided with individual thermostats for temperature control.

Applicable SCA Design Requirement:
6.2.0 General Overview of Heating Ventilation and Air Conditioning Systems
6.2.1 HVAC Unit Centralization and Coordination
6.2.3 Non-Assembly Spaces (Classrooms, Offices, etc.)
6.2.4 Public Assembly Spaces

Applicable SCA Specification Sections:
15970 Temperature Control System
15985 Sequence of Operations

Thermal Comfort

Q 6.1R Thermal Comfort, Design

This credit is *required and feasible*. Design document will provide location of air outlets, system layout and thermostat location. The design will comply with the applicable New York City HVAC Design Requirements in order to provide thermal comfort requirements of ASHRAE 55-2004.

Refer to Mechanical Load Calculations and Major Equipment Cut Sheets report in the Supporting Documents on Page 133-240.

Applicable SCA Design Requirement:

6.2.0	General Overview of Heating Ventilation and Air Conditioning Systems
6.2.1	HVAC Unit Centralization and Coordination
6.2.3	Non-Assembly Spaces (Classrooms, Offices, etc.)
6.2.4	Public Assembly Spaces
6.2.9	Heating and Cooling Design Parameters (Load Calculations)
6.2.22	Kitchen Ventilation
6.2.28	HVAC Design Requirement for Special Spaces

Applicable SCA Specification Sections:

15970	Temperature Control System
15985	Sequence of Operations

Lighting and Views

Q 7.1 Daylight & Views, Daylight 75% of Classrooms

This credit is *required and feasible* by pursuing Option 3 - Combination. As per the SCA Green Schools requirements all the classrooms achieve the required 75% natural daylight. The school has a north to south orientation, taking advantage of the sun light throughout the day. The classrooms located on the East and West Facade of the school also have windows located along the length of the space. **Refer to the table on the following page (Q7.1 and Q7.3).** All the VLT for windows will meet the requirements of both NYCECC and ASHRAE. All windows are also to have chain and clutch operated window shades to protect from heat gain and glare.

Applicable SCA Design Requirement:

1.3.1.1	Building Location and Orientation.
1.3.1.2	Planning Guidelines for New Schools and Additions.

Applicable SCA Specification Sections:

08524	Aluminum Projected Windows
08800	Miscellaneous Glazing
12501	Chain ad Clutch Operated Window Shade

Q 7.2 Daylight & Views, Daylight for 90% of Classrooms

This credit is *not feasible* and will not be pursued.

Q 7.3 Daylight & Views, Daylight for 75% of Other Spaces

This credit is *not feasible* and will not be pursued.

Refer to the table on the following page (Q7.1 and Q7.3).

DAYLIGHT & VIEWS
Daylight Calculation Form for Classrooms
Credit Q7.1, Q7.2

SCA School Construction Authority
NYC Green School Rating Systems

Project: P.S. 320X - New Building
Address: 1560 Boone Avenue, Bronx, New York 10460
LLW: 107404
Design #: N/A
Architect: di Domenico + Partners
Preparer: Paul Alber, AIA
Date: 4/13/2018

RM #	Room Name	Room Data			Window Data						Glazing Data		Transmittance-VLT		Daylight Zone		WFR Factor	Daylight Zone Factor		Daylight Area		Compliant Daylight Area	Compliant area %
		Room Area		Room Length	Effective Head Hgt	Sill Hgt	Daylight Hgt	Window Width/ Room	Window Area - WA		Glazing factor	Glass Area	Actual	Min	Daylight Zone Depth	Daylight Area	Actual	Actual/ Greatest	Required		Actual Daylight Zone Factor	Greatest Room Area Allowed	
FIRST FLOOR																							
101	PRE-K CLASSROOM	914	SF	35.50	9.83	2.50	7.33	23.00	169	SF	0.67	147	0.67	0.67	19.66	697.93	0.22	0.15	0.15 - 0.18	677	0.145	**677**	0.74
102	PRE-K CLASSROOM	921	SF	33.66	9.83	2.50	7.33	23.00	169	SF	0.67	147	0.67	0.67	19.66	661.76	0.22	0.15	0.15 - 0.18	677	0.145	**677**	0.74
105	PRE-K CLASSROOM	812	SF	32.66	9.83	2.50	7.33	21.00	154	SF	0.67	134	0.67	0.67	19.66	642.10	0.22	0.15	0.15 - 0.18	618	0.145	**618**	0.76
SECOND FLOOR																							
201	1st GRADE CLASSROOM	693	SF	28.75	9.83	2.50	7.33	18.00	132	SF	0.67	115	0.67	0.67	19.66	565.23	0.22	0.15	0.15 - 0.18	530	0.145	**530**	0.76
202	KIN. CLASSROOM	944	SF	33.16	9.83	2.50	7.33	24.00	176	SF	0.67	153	0.67	0.67	19.66	651.93	0.22	0.15	0.15 - 0.19	707	0.145	**707**	0.75
203	1st GRADE CLASSROOM	686	SF	28.75	9.83	2.50	7.33	18.00	132	SF	0.67	115	0.67	0.67	19.66	565.23	0.22	0.15	0.15 - 0.20	530	0.145	**530**	0.77
204	KIN. CLASSROOM	945	SF	31.66	9.83	2.50	7.33	24.00	176	SF	0.67	153	0.67	0.67	19.66	622.44	0.22	0.15	0.15 - 0.21	707	0.145	**707**	0.75
205	1st GRADE CLASSROOM	692	SF	28.75	9.83	2.50	7.33	18.00	132	SF	0.67	115	0.67	0.67	19.66	565.23	0.22	0.15	0.15 - 0.20	530	0.145	**530**	0.77
210	KIN. CLASSROOM	898	SF	36.08	9.83	2.50	7.33	23.00	169	SF	0.67	147	0.67	0.67	19.66	707.76	0.22	0.15	0.15 - 0.21	677	0.145	**677**	0.75
THIRD FLOOR																							
301	2ND GR. CLASSROOM	693	SF	28.75	9.83	2.50	7.33	18.00	132	SF	0.67	115	0.67	0.67	19.66	565.23	0.22	0.15	0.15 - 0.18	530	0.145	**530**	0.76
302	3RD GR. CLASSROOM	694	SF	28.66	9.83	2.50	7.33	18.00	132	SF	0.67	115	0.67	0.67	19.66	563.46	0.22	0.15	0.15 - 0.18	530	0.145	**530**	0.76
303	2ND GR. CLASSROOM	689	SF	28.75	9.83	2.50	7.33	18.00	132	SF	0.67	115	0.67	0.67	19.66	565.23	0.22	0.15	0.15 - 0.18	530	0.145	**530**	0.77
304	3RD GR. CLASSROOM	695	SF	27.25	9.83	2.50	7.33	18.00	132	SF	0.67	115	0.67	0.67	19.66	535.74	0.22	0.15	0.15 - 0.21	530	0.145	**530**	0.76
305	2ND GR. CLASSROOM	692	SF	28.75	9.83	2.50	7.33	18.00	132	SF	0.67	115	0.67	0.67	19.66	565.23	0.22	0.15	0.15 - 0.18	530	0.145	**530**	0.77
306	3RD GR. CLASSROOM	696	SF	27.50	9.83	2.50	7.33	18.00	132	SF	0.67	115	0.67	0.67	19.66	540.65	0.22	0.15	0.15 - 0.18	530	0.145	**530**	0.76
FOURTH FLOOR																							
402	4TH GR. CLASSROOM	694	SF	28.66	9.83	2.50	7.33	18.00	132	SF	0.67	115	0.67	0.67	19.66	563.46	0.22	0.15	0.15 - 0.18	530	0.145	**530**	0.76
404	4TH GR. CLASSROOM	695	SF	27.25	9.83	2.50	7.33	18.00	132	SF	0.67	115	0.67	0.67	19.66	535.74	0.22	0.15	0.15 - 0.19	530	0.145	**530**	0.76
406	4TH GR. CLASSROOM	696	SF	28.50	9.83	2.50	7.33	18.00	132	SF	0.67	115	0.67	0.67	19.66	560.31	0.22	0.15	0.15 - 0.20	530	0.145	**530**	0.76
FIFTH FLOOR																							
502	5TH GR. CLASSROOM	694	SF	28.66	9.83	2.50	7.33	18.00	132	SF	0.67	115	0.67	0.67	19.66	563.46	0.22	0.15	0.15 - 0.18	530	0.145	**530**	0.76
504	5TH GR. CLASSROOM	695	SF	27.25	9.83	2.50	7.33	18.00	132	SF	0.67	115	0.67	0.67	19.66	535.74	0.22	0.15	0.15 - 0.19	530	0.145	**530**	0.76
506	5TH GR. CLASSROOM	696	SF	27.50	9.83	2.50	7.33	18.00	132	SF	0.67	115	0.67	0.67	19.66	540.65	0.22	0.15	0.15 - 0.20	530	0.145	**530**	0.76
508	MUSIC ROOM	805	SF	31.16	9.83	2.50	7.33	29.00	213	SF	0.67	185	0.67	0.67	19.66	612.61	0.22	0.15	0.15 - 0.21	805	0.154	**805**	1.00

RM #	Room Name	Room Data			Window Data						Glazing Data		Transmittance-VLT		Daylight Zone		WFR Factor	Daylight Zone Factor		Daylight Area		Compliant Daylight Area	Compliant area %
		Room Area		Room Length	Effective Head Hgt	Sill Hgt	Daylight Hgt	Window Width/ Room	Window Area - WA		Glazing factor	Glass Area	Actual	Min	Daylight Zone Depth	Daylight Area	Actual	Actual/ Greatest	Required		Actual Daylight Zone Factor	Greatest Room Area Allowed	

SF OF AREA BEING 16,639

SF OF AREA THAT ACHIEVES DAYLIGHT 12,818
Overall Percentage Achieved: *77.04%*
Complies? (Y/ N): *YES*
Complies? (Y/ N): *NO*

Requirement to achieve credit Q7.1 is Daylight in 75% of classroom areas
Requirement to achieve credit Q7.2 is Daylight in 90% of classroom areas

Directions

1. *It is permissible to exclude areas where tasks would be hindered by the use of daylight. Exceptions on this basis might include computer rooms.*
2. *Copy additional rows including the formulas as required for each additional room to be included on this form.*
3. *Enter room number, room name, area of room (excluding built-in closets), Length (L - length of room parallel and adjacent to window), effective window head height, sill height, total width of windows per room/bay, glazing factor, and actual*
4. *Enter glazing factor multiplier based on window width, window height and number of windows per Masonry opening from table 1*
5. *Enter Minimum Visible Transmittance Factor. The default value used is to be 0.67, which is the minimum required per the SCA standard specification. Where specified glazing is not per SCA standard, Verify/enter actual transmittance for*
6. *Where a soffit/ceiling is lower than the window head height, the head height need to be modified accordingly as per diagram in GSG Credit Q7.1. Area of any obstruction that falls within the daylit zone must beexcluded from the qualifying*
7. *Check that all figures are included in worksheet cells, summing SF OF AREA BEING EVALUATED FOR DAYLIGHT FACTOR and SF OF AREA THAT ACHIEVES DAYLIGHT FACTOR.*

Table 1

nominal window width	*Number of Window/MO* 1	2-3	4-6	7 and more	*window height*
	0.88	*0.87*	*0.86*	*0.85*	*84*
	0.88	***0.87***	***0.87***	***0.87***	***88"***
48	***0.89***	***0.88***	***0.87***	***0.86***	***≥ 92"***
	0.88	*0.86*	*0.86*	*0.85*	*84"*
	0.88	***0.87***	***0.86***	***0.85***	***88"***
40	*0.89*	*0.87*	*0.87*	*0.86*	***≥ 92"***
	0.88	*0.86*	*0.85*	*0.84*	*84"*
	0.88	***0.86***	***0.86***	***0.85***	***88"***
32	**0.89**	**0.87**	**0.86**	**0.85**	***≥ 92"***
	0.88	*0.85*	*0.85*	*0.84*	*84*
	0.88	***0.86***	***0.85***	***0.84***	***88"***
24	**0.89**	**0.86**	**0.86**	**0.85**	***≥ 92"***

4/25/2017

DAYLIGHT & VIEWS
Daylight Calculation Form for Other Spaces
Credit Q7.3

School Construction Authority
NYC Green School Rating Systems

Project: P.S. 320X - New Building
Address: 1560 Boone Avenue, Bronx, New York 10460
LLW: 107404 Design #: N/A

Architect: di Domenico + Partners
Preparer: Paul Alber, AIA
Date: 4/13/2018

RM #	Room Name	Room Data			Window Data						Glazing Data		Transmittance-VLT		Daylight Zone		WFR Factor	Daylight Zone Factor		Daylight Area		Compliant Daylight Area	Compliant area %
		Room Area		Room Length	Effective Head Hgt	Sill Hgt	Daylight Hgt	Window Width/ Room	Window Area - WA		Glazing factor	Glass Area	Actual	Min	Daylight Zone Depth	Daylight Area	Actual	Actual/ Greatest	Required		Actual Daylight Zone Factor	Greatest Room Area Allowed	
104	PRINCIPAL OFFICE	342	SF	14.50	9.83	2.50	7.33	12.66	93	SF	0.87	81	0.67	0.67	19.66	285.07	0.22	0.15	0.15 - 0.18	342	0.158	**342**	1.00
106	GENERAL OFFICE	501	SF	16.50	9.83	2.50	7.33	12.66	93	SF	0.87	81	0.67	0.67	19.66	324.39	0.22	0.15	0.15 - 0.18	373	0.145	**373**	0.74
108	CAFETERIA	2195	SF	84.33	9.83	2.50	7.33	60.00	440	SF	0.87	383	0.67	0.67	19.66	1657.93	0.22	0.15	0.15 - 0.18	1,767	0.145	**1,767**	0.81
107	NURSE'S OFFICE	282	SF	18.00	9.83	2.50	7.33	8.00	59	SF	0.87	51	0.67	0.67	19.66	353.88	0.22	0.15	0.15 - 0.18	235	0.145	**235**	0.83
206	SPEECH RESOURCE ROOM	354	SF	15.50	9.83	2.50	7.33	6.50	48	SF	0.87	41	0.67	0.67	19.66	304.73	0.22	0.15	0.15 - 0.18	191	0.145	**191**	0.54
212	HEALTH OFFICE	56	SF	9.33	9.83	2.50	7.33	6.50	48	SF	0.87	41	0.67	0.67	19.66	183.43	0.22	0.15	0.15 - 0.18	56	0.490	**0**	1.00
216	GYMATORIUM	2907	SF	47.00	9.83	2.50	7.33	40.00	293	SF	0.87	255	0.67	0.67	19.66	924.02	0.22	0.15	0.15 - 0.18	1,178	0.145	**1,178**	0.41
310	EXERCISE ROOM	1105	SF	42.00	9.83	2.50	7.33	26.00	191	SF	0.87	166	0.67	0.67	19.66	825.72	0.22	0.15	0.15 - 0.18	766	0.145	**766**	0.69
401	STAFFLUNCH	457	SF	17.83	9.83	2.50	7.33	9.66	71	SF	0.87	62	0.67	0.67	19.66	350.54	0.22	0.15	0.15 - 0.18	284	0.145	**284**	0.62
405	SPECIAL ED	408	SF	18.00	9.83	2.50	7.33	6.50	48	SF	0.87	41	0.67	0.67	19.66	353.88	0.22	0.15	0.15 - 0.18	191	0.145	**191**	0.47
407C	CONFERENCE ROOM	140	SF	14.00	9.83	2.50	7.33	6.50	48	SF	0.87	41	0.67	0.67	19.66	275.24	0.22	0.15	0.15 - 0.18	140	0.198	**0**	1.00
501	LIBRARY	932	SF	37.00	9.83	2.50	7.33	31.66	232	SF	0.87	202	0.67	0.67	19.66	727.42	0.22	0.15	0.15 - 0.18	932	0.145	**932**	1.00
503	READING RESOURCE	387	SF	16.50	9.83	2.50	7.33	6.50	48	SF	0.87	41	0.67	0.67	19.66	324.39	0.22	0.15	0.15 - 0.18	191	0.145	**191**	0.49
505	CUSTODIAL WORKSHOP	398	SF	15.50	9.83	2.50	7.33	6.50	48	SF	0.87	41	0.67	0.67	19.66	304.73	0.22	0.15	0.15 - 0.18	191	0.145	**191**	0.48
510	SPECIAL ED	474	SF	10.83	9.83	2.50	7.33	12.83	94	SF	0.87	82	0.67	0.67	19.66	212.92	0.22	0.15	0.15 - 0.18	378	0.145	**378**	0.80

SF OF AREA BEING EVALUATED FOR DAYLIGHT FACTOR: 10,938

SF OF AREA THAT ACHIEVES DAYLIGHT FACTOR: 7,019
Overall Percentage Achieved: 64.17%

Requirement to achieve credit Q7.3 is Daylight in 75% of Other Spaces

Complies? (Y/ N): ***NO***

Directions

1. *Gymatoriums and Multipurpose rooms are considered regularly occupied spaces.*
2. *Copy additional rows including the formulas as required for each additional room to be included on this form.*
3. *Enter room number, room name, area of room (excluding built-in closets), Length (L - length of room parallel and adjacent to window), effective window head height, sill height, total width of windows per room/bay, glazing factor, and actual transmittance factor of glazing. Window Area (WA), glass area, daylight zone depth (window head height x 2), area of daylight zone , WFR factor, Daylight Zone Factor, and Daylight Area are calculated by formula*

RM #	Room Name	Room Data			Window Data						Glazing Data		Transmittance-VLT		Daylight Zone		WFR Factor	Daylight Zone Factor		Daylight Area		Compliant Daylight Area	Compliant area %
		Room Area		Room Length	Effective Head Hgt	Sill Hgt	Daylight Hgt	Window Width/ Room	Window Area - WA		Glazing factor	Glass Area	Actual	Min	Daylight Zone Depth	Daylight Area	Actual	Actual/ Greatest	Required		Actual Daylight Zone Factor	Greatest Room Area Allowed	

4. *Enter glazing factor multiplier based on window width, window height and number of windows per Masonry opening from table 1*
5. *Enter Minimum Visible Transmittance Factor. The default value used is to be 0.67, which is the minimum required per the SCA standard specification. Where specified glazing is not per SCA standard, Verify/enter actual transmittance for specified glazing.*
6. *Where a soffit/ceiling is lower than the window head height, the head height need to be modified accordingly as per diagram in GSG Credit Q7.1. Area of any obstruction that falls within the daylit zone must beexcluded from the qualifying daylight area*
7. *It is permissible to exclude areas where tasks would be hindered by the use of daylight. Exceptions on this basis might include auditoriums with fixed seating.*
8. *Check that all figures are included in worksheet cells, summing SF OF AREA BEING EVALUATED FOR DAYLIGHT FACTOR and SF OF AREA THAT ACHIEVES DAYLIGHT FACTOR.*

Table 1

nominal window width	*Number of Window/MO* 1	2-3	4-6	7 and more	*window height*
	0.88	*0.87*	*0.86*	*0.85*	*84*
	0.88	***0.87***	***0.87***	***0.87***	***88"***
48	***0.89***	***0.88***	***0.87***	***0.86***	***≥ 92"***
	0.88	*0.86*	*0.86*	*0.85*	*84"*
	0.88	***0.87***	***0.86***	***0.85***	***88"***
40	*0.89*	*0.87*	*0.87*	*0.86*	***≥ 92"***
	0.88	*0.86*	*0.85*	*0.84*	*84"*
	0.88	***0.86***	***0.86***	***0.85***	***88"***
32	**0.89**	**0.87**	**0.86**	**0.85**	***≥ 92"***
	0.88	*0.85*	*0.85*	*0.84*	*84*
	0.88	***0.86***	***0.85***	***0.84***	***88"***
24	**0.89**	**0.86**	**0.86**	**0.85**	***≥ 92"***

4/25/2017

Q 7.4 Daylight & Views, Views

This credit will be *required and feasible* that all required spaces will have direct line of site to the outdoors views.

Refer to table below (Q7.4) and drawings (Floor Plans 1 through 5) in Section 4 on Page 117.

Applicable SCA Design Requirement:

1.3.1.1 Building Location and Orientation

DAYLIGHT & VIEWS
Views Calculation Form
Credit Q7.4

SCA School Construction Authority
NYC Green Schools Rating System

Project: **P.S. 320X - New Building**
Address: **1560 BOONE AVENUE, BRONX, NEW YORK 10460**
LLW #: **LLW# 107404**
Design #: **N/A**

Architect: **di Domenico + Partners**
Preparer: **Paul Alber, AIA**
Date: **4/13/2018**

RM #	RM NAME	Total Occupiable Area in SF	Step 1: Horizontal View at: 36" for rooms used by for PK-thru 5 grades	42" for rooms used by for 6-thru 12 grades and offices	Step 2: Calculated Area of Room that Does Not have Direct Line of Sight to Perimeter Vision Glazing	Compliant Area (sf)
			Y/N/NA	Y/N/NA		
1ST FLOOR						
101	PRE-K CLASSROOM	914	Y	NA	0	914
102	PRE-K CLASSROOM	921	Y	NA	20	901
105	PRE-K CLASSROOM	812	Y	NA	25	787
104	PRINCIPAL OFFICE	342	Y	NA	0	342
106	GENERAL OFFICE	501	N	Y	0	501
108	CAFETERIA	2195	Y	NA	70	2,125
107	NURSE'S OFFICE	170	N	Y	0	170
109	PARENT / COMMUNITY	282	N	Y	0	282
107	RECORDS ROOM	112	N	Y	112	0
		6,249				**6022**
2ND FLOOR						
201	1st GRADE CLASSROOM	693	Y	NA	0	693
202	KIN. CLASSROOM	944	Y	NA	29	915
203	1st GRADE CLASSROOM	686	Y	NA	9	677
204	KIN. CLASSROOM	945	Y	NA	6	939
205	1st GRADE CLASSROOM	692	Y	NA	7	685
206	SPEECH RESOURCE ROOM	354	Y	NA	0	354
210	KIN. CLASSROOM	898	Y	NA	16	882
212	HEALTH OFFICE	56	N	Y	0	56
		5,268				**5201**
3RD FLOOR						
301	2ND GR. CLASSROOM	693	Y	NA	0	693
302	3RD GR. CLASSROOM	694	Y	NA	12	682
303	2ND GR. CLASSROOM	689	Y	NA	10	679
304	3RD GR. CLASSROOM	695	Y	NA	22	673
305	2ND GR. CLASSROOM	692	Y	NA	6	686
306	3RD GR. CLASSROOM	696	Y	NA	9	687
308	SUPERVISORY OFFICE	149	N	Y	149	0
310	EXERCISE ROOM	1105	Y	NA	6	1,099
		5,413				**5199**
4TH FLOOR						
401	STAFF LUNCH	457	NA	Y	0	457
402	4TH GR. CLASSROOM	694	Y	NA	12	682
403	TEACHERS WORK ROOM	350	NA	Y	0	350
404	4TH GR. CLASSROOM	695	Y	NA	22	673
405	SPECIAL ED	408	Y	NA	60	348
406	4TH GR. CLASSROOM	696	Y	NA	9	687
407A	GUIANCE OFFICE	140	NA	Y	0	140
407B	GUIDANCE OFFICE	140	NA	Y	0	140
407C	CONFERENCE ROOM	140	NA	Y	0	140
408	PROJECT ROOM	1152	Y	NA	26	1,126
		4,872				**4743**
5TH FLOOR						
501	LIBRARY	932	Y	NA	0	932
502	5TH GR. CLASSROOM	694	Y	NA	12	682
503	READING RESOURCE	387	Y	NA	32	355
504	5TH GR. CLASSROOM	695	Y	NA	22	673
505	CUSTODIAL WORKSHOP	398	Y	NA	9	389
505A	CUSTODIAL OFFICE	249	Y	NA	249	0
506	5TH GR. CLASSROOM	696	Y	NA	9	687
508	MUSIC ROOM	805	Y	NA	28	777
501	LIBRARY	932	Y	NA	7	925
510	SPECIAL ED	474	Y	NA	0	474
		6,262	NA			**5894**

SF OF AREA BEING EVALUATED FOR VIEWS: 28,064 — **SF OF AREA WITH VIEWS: 27,059**

Percent Access to Views 96.4%

Requirement to achieve credit Q 7.4 is Views for 90% of regularly occupied spaces — ***Complies? (Y / N):*** **Y**

Q 7.5R Visual Performance, Artificial Direct-Indirect Lighting

This credit is *anticipated*. All classrooms and other core learning spaces will be provided with pendant-mounted direct-indirect light fixtures with high efficiency LED lamps. The use of this type of lighting fixtures will reduce lighting power density (LPD); therefore, use less energy while delivering a better quality of light to the space. Typical ceiling height will be 9'-4" feet with the bottom of pendant fixtures set no lower than 8'-0".

Refer to photometric plans on Page 97 and Refer to Typical Ceiling Section below.

Applicable SCA Design Requirement:
7.2.1 Interior lighting

Applicable SCA Specification Sections:
16502 LED Interior Building Lighting

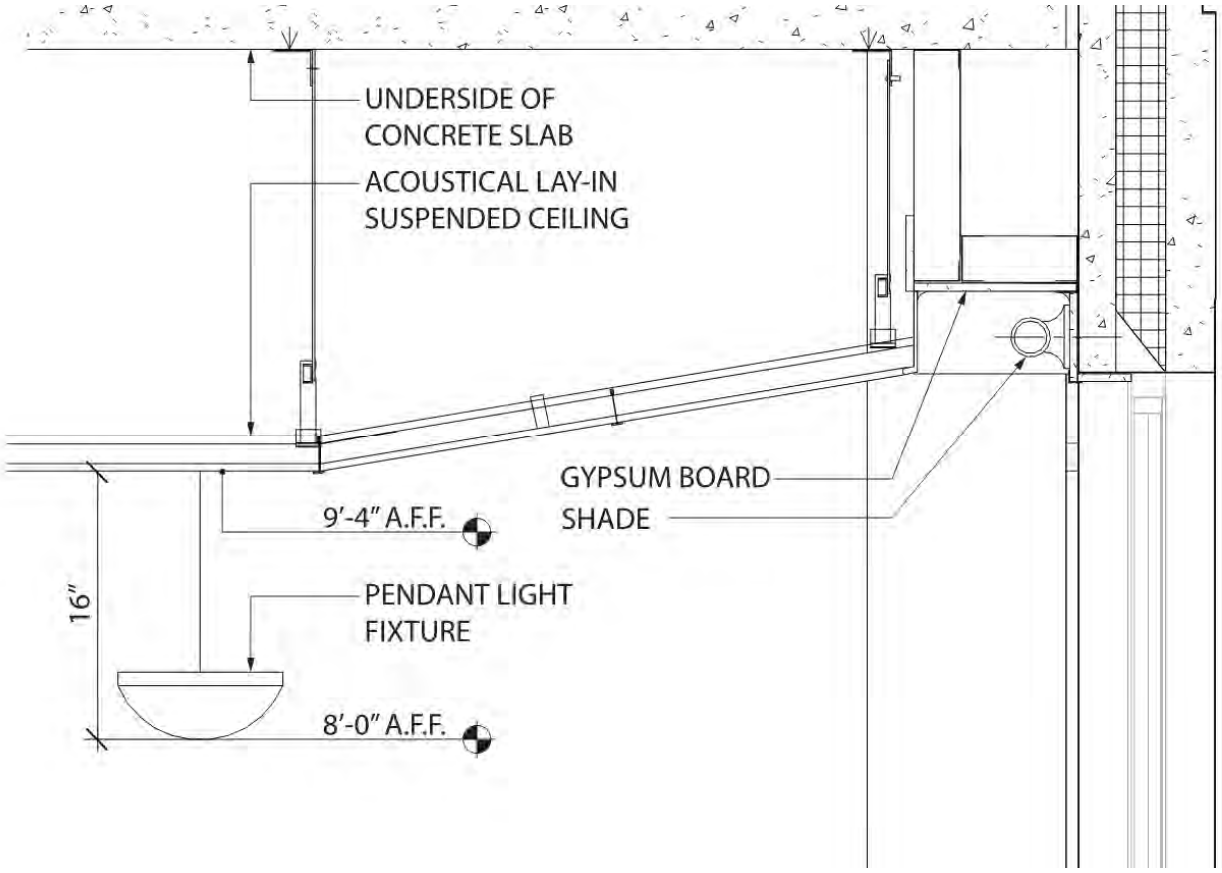

Typical Ceiling Section

Acoustics

Q 8.1P Minimum Acoustical Performance

This credit is *required and anticipated*. The Design Team will review HVAC design for compliance with New York City SCA HVAC Acoustical Design Standard No. 6.2.25 so that background noise levels do no exceed 45 dBA in classrooms and other core learning spaces. Noise transfer will be limited between spaces by prescribed partitions and assemblies.

Background Noise Level

The project background sound level design criterion for classrooms/core learning spaces is based on the enhanced acoustical performance requirement requiring 40dBA and is addressed in Section 8.2.

Reverberation Time

Classrooms will be provided with ACT, selected to have a minimum NRC-0.70 performance rating, making up the entirety of the finish ceiling to meet GSG core learning space reverberation time requirements.

The reviewed Gymnatorium design includes tectum panel ceilings, acoustic wood, and acoustically absorptive fabric wrapped panels. With the reviewed acoustic finishes, we expect the Gymnatorium reverberation time to meet the 1.5 second criteria.

Applicable SCA Design Requirement:

1.3.1.9	Architectural Acoustic Standards
5.4.1	Suspended Ceilings
6.2.25	HVAC Acoustical Standards

Applicable SCA Specification Sections:

09510	Acoustical Ceilings
15852	Air Handling Units
15935	Single Zone Variable Air Volume Units for PA spaces
15891	Metal Ductwork
15910	Duct Accessories
15993	Balancing of Systems

Refer to Acoustical Report in the Supporting Documentations section of this report on page 121.
Refer to Acoustical Recommendation letter in the Supporting Documentations section of this report on page 130.

Q 8.2 Enhanced Acoustical Performance & Sound Isolation for Special Spaces

This credit is *required and feasible*. All STC ratings and impact isolation requirements shall be followed.

Classroom: These rooms have the same acoustical properties for the walls and ceilings 2 layers of 5/8" thick gypsum board on both sides of walls and batt insulation.

Demising Constructions

Demising partition constructions are in accordance with ANSI S12.60-2002 requirements.

Special Adjacencies

The following notes special adjacency conditions, as noted by SCA and GSG Q8.2, and corresponding demising constructions designed to meet the required STC/IIC-60 rating.

- Cafeteria

The current design locates the 1st Floor Cafeteria beneath 2nd Floor Classrooms. To meet the required STC-60 rating, an ACT finish ceiling system and 10-inch concrete slab construction will be provided.

- Music Classroom

The current design locates the Music Classroom directly above and horizontally adjacent to Classrooms. STC-60 floor/ceiling and partition constructions are required at these adjacencies. Additionally, an IIC-60 rating is required for the floor/ceiling construction between the Music Classroom and Classroom

below.

The following considerations have been incorporated into the Music Room design to meet the STC/IIC-60 requirements:

o 10-inch thick slab and vinyl finish flooring installed atop of two (2) layers of ¾-inch thick plywood and 6mm acoustic underlayment
o Demising classroom partitions consisting of two (2) layers of 5/8-inch gyp board on each side of steel independent stud rows with batt insulation in the stud cavities.

Windows
Exterior glazing units will consist of two (2) lites of ¼-inch laminated glazing separated by a ½-inch airspace. Based on Viracon manufacturer performance data for this glazing type, we expect this to achieve an STC-40 rating; exceeding the minimum required STC-35 rating.
Background Noise Levels
The current design incorporates the following noise control elements, as per our recommendations, to meet the 40dBA background noise level requirement within core learning spaces:

- 3ft sound attenuator for VAVs
- Sound attenuators within supply and return ductwork for AHUs
- Heavy gauge Sheetmetal and gypsum board duct enclosures where required to attenuate duct breakout noise
- Supply diffusers and return grilles selected to have NC ratings at least 10 points less than room background NC criteria as based on designed air volume

Applicable SCA Design Requirement:

1.3.1.9	Architectural Acoustic Standards
4.3.1	Window Types
5.1.1	Typical Room Finishes
5.2.2	Interior Partitions
5.3.1	Floor Types
5.5.1	Interior Doors and Frames
6.2.25	HVAC Acoustical Standards

Applicable SCA Specification Sections:

08524	Aluminum Projected Windows
09260	Gypsum Board Assemblies

Refer to Acoustical Report in the Supporting Documentations section of this report on page 121.
Refer to Acoustical Recommendation letter in the Supporting Documentations section of this report on page 130.

Q 8.3 Acoustical Windows

This credit is *not required.* This credit is only required when applicable to schools severely impacted by transportation noise sources such as aircraft, elevated trains or highways. DDP anticipates incorporating all design standards for window assembly that will achieve requirements listed in the Restrictive Declaration for adjoining residential properties as well as meeting SCA standards for exterior façade performance. The building façade will be comprised of composite precast walls and SCA standard windows. Applicable ULURP sections are included on the following pages for reference.
On November 14, 2017, Cerami visited the PS 320X project site at 1570 Boone Avenue in Bronx, NY to take background sound levels measurements at street level along Boone Avenue in an effort to capture exterior sound levels during typical school day rush hour. Based on the highest measured L10 value, 67 dBA measured between 4:00PM and 5:00PM, we conclude that the STC-35 windows, as required by Q8.2, will suffice in

maintaining interior background sound level requirements. Upgraded window types are not required for this project; credit not applicable.

Applicable SCA Design Requirement:
1.3.1.9 Architectural Acoustic Standards

Applicable SCA Specification Sections:
08524 Aluminum Projected Windows

Refer to Acoustical Report in the Supporting Documentations section of this report on page 121.
Refer to Acoustical Recommendation letter in the Supporting Documentations section of this report on page 130.
Refer to ULURP Reference in the following pages.

(ii) *Parcel B-1*. Provide a closed-window condition with the minimum window/wall attenuations specified on Table 2 below to maintain an interior noise level of 45 dBA.

Table 2: Parcel B-1 Noise Attenuation Requirements (in dBA)

Building	Façade	Floor	Required Attenuation
Building 2A	Facing north	1st - 6th	28
		All others	25
	Facing south	1st - 6th	33
		All others	31
	Facing east	1st - 4th	35
		5th - 8th	33
		All others	31
	Facing west	1st - 6th	28
		All others	25
	Facing Children's Playground	1st	35
		2nd - 3rd	33
		4th	31
		All others	28
Building 2B	Facing north	1st - 6th	28
		All others	25
	Facing south	1st - 6th	28
		All others	25
	Facing east	1st - 4th	35
		5th - 8th	33
		All others	31
	Facing west	1st - 6th	28
		All others	25
	Facing Children's Playground	1st - 2nd	35
		3rd	33
		4th - 6th	28
		All others	25

(iii) *Parcel B-2*. Provide a closed-window condition with the minimum window/wall attenuations specified on the table below to maintain an interior noise level of 45 dBA.

(b) **Noise.** To ensure an acceptable interior noise environment, Declarant shall (x) prior to acceptance of a Building Permit for a New Building, submit plans for DCP/OER review pursuant to Section 3.7 of this Declaration demonstrating compliance with, and thereafter implement, the following noise attenuation requirements for such New Building constructed on a Parcel:

(i) *Parcel A*. Provide a closed-window condition with the minimum window/wall attenuations specified on Table 1 below to maintain an interior noise level of 45 dBA.

Table 1: Parcel A Noise Attenuation Requirements (in dBA)

Building	Façade	Floor	Required Attenuation
Building 1A	Facing north	1st - 2nd	28
		All others	25
	Facing south	1st - 2nd	28
		All others	25
	Facing east	1st - 4th	35
		5th-8th	33
		9th	31
	Facing west	1st - 2nd	28
		All others	25
Building 1B	Facing north	1st - 4th	33
		5th - 8th	31
		All others	28
	Facing south	1st - 3rd	28
		All others	25
	Facing east	1st - 4th	35
		5th - 7th	33
		8th -14th	31
		15th	28
	Facing west	1st - 4th	31
		5th - 8th	28
		All others	25

(ii) *Parcel B-1*. Provide a closed-window condition with the minimum window/wall attenuations specified on Table 2 below to maintain an interior noise level of 45 dBA.

Table 2: Parcel B-1 Noise Attenuation Requirements (in dBA)

Building	Façade	Floor	Required Attenuation
Building 2A	Facing north	1st - 6th	28
		All others	25
	Facing south	1st - 6th	33
		All others	31
	Facing east	1st - 4th	35
		5th - 8th	33
		All others	31
	Facing west	1st - 6th	28
		All others	25
	Facing Children's Playground	1st	35
		2nd - 3rd	33
		4th	31
		All others	28
Building 2B	Facing north	1st - 6th	28
		All others	25
	Facing south	1st - 6th	28
		All others	25
	Facing east	1st - 4th	35
		5th - 8th	33
		All others	31
	Facing west	1st - 6th	28
		All others	25
	Facing Children's Playground	1st - 2nd	35
		3rd	33
		4th - 6th	28
		All others	25

(iii) *Parcel B-2*. Provide a closed-window condition with the minimum window/wall attenuations specified on the table below to maintain an interior noise level of 45 dBA.

Table 3: Parcel B-2 Noise Attenuation Requirements (in dBA)

Building	Façade	Floor	Required Attenuation
Building 3A	Facing north	1st - 5th	28
		All others	25
	Facing south	1st - 5th	28
		All others	25
	Facing east	1st - 4th	33
		5th - 10th	31
		All others	28
	Facing west	1st - 5th	28
		All others	25
Building 3B	Facing north	1st - 9th	31
		All others	28
	Facing south*	1st - 6th	28
		All others	25
	Facing east	1st - 4th	33
		5th - 11th	31
		All others	28
	Facing west	1st - 6th	28
		All others	25
Building 3C	Facing north	1st - 3rd	28
		All others	25
	Facing south	1st - 4th	28
		All others	25
	Facing east	1st - 3rd	33
		All others	31
	Facing west	1st - 4th	28
		All others	25

* If the Elementary School is constructed, any windows adjacent to and at the level or above the height of the rooftop playground shall meet a minimum required attenuation of 35 dBA.

(iv) To maintain a closed-window condition, an alternate means of ventilation must also be provided. Alternate means of ventilation shall include, but shall not be limited to, air conditioning or trickle vents installed in windows of each habitable room.

(v) Following the issuance of a TCO or PCO for a New Building, Declarant shall not eliminate or modify a noise attenuation measure unless DCP shall have approved such elimination or modification in accordance with Section 3.6. DOB shall not issue, and Declarant shall not accept, a demolition permit or alteration permit from DOB which would result in the elimination or modification of any noise attenuation measure. In no event shall this

Regional Credits

The site is in West Farms area of the Bronx; thus, S3.1, A2.2, WEc2, A3.1, A3.2 & M1.2 are considered as the project's Regional Credits. The Design Team will pursue S1.4, S2.1, S3.1, and WEc2 to achieve four (4) Regional Credits. Based on project Zip Code 10460:

Regionally Appropriate

R1.1 Regionally Defined Credit is NOT Achieved

See Credit S3.1.

R1.2 Regionally Defined Credit is NOT Achieved

See WEc2.

R1.3 Regionally Defined Credit is NOT Achieved

See Credit A3.1.

R1.4 Regionally Defined Credit is Achieved

See Credit A3.2.

Additional Credits

A 1.1R LEED Accredited Professional

This credit is *required*. Adam Mercer, LEED AP in Building Design + Construction, is the Design Team's LEED professional.

LEED AP BD+C

GREEN BUSINESS CERTIFICATION INC. CERTIFIES THAT

Adam Mercier

HAS ATTAINED THE DESIGNATION OF

LEED AP® Building Design + Construction

by demonstrating the knowledge and understanding of green building practices and principles needed to support the use of the LEED green building program.

10590371-AP-BD+C
CREDENTIAL ID

04 DEC 2010
ISSUED

02 DEC 2020
VALID THROUGH

MAHESH RAMANUJAN
PRESIDENT & CEO, U.S. GREEN BUILDING COUNCIL
PRESIDENT & CEO, GREEN BUSINESS CERTIFICATION INC.

A 1.2 Innovation or Exemplary Performance

This credit is optional and will not be pursued and *not feasible*.

A 2.1 Heat Island Effect, Non-Roof

This credit is optional and will not be pursued and *not feasible*.

A 2.2 Stormwater Design, Quantity Control

This credit is optional and will not be pursued and *not feasible*

A 2.3 Active Design in a School Environment

Updated from the last submission, this credit is optional and will not be pursued as it is *not feasible*.

Refer to Active Design Worksheet and Credit Reporting Form in the following page.

Active Design in a School Environment
Active Design Worksheet and Credit Reporting Form
Credit A 2.3

Proje PS 320X - BRONX
Addn 1570 BOONE AVENUE, BRONX, NY10460
LLW 107404
Date 2/12/2019, REV. 04/22/2019

SCA School Construction Authority
NYC Green Schools Rating System - 2016

Architect: di Domenico + Partners
Preparer:
Phone: 212.337.0400

#	ITEM	INTENT	DESIGN CASE	DOCUMENTATION METHOD	PROJECT COMPLIES? (use tabs)
	PREREQUISITE				
R	Minimum Accessible Floors	Make active modes of vertical circulation accessible to all users	Building must have at least 1 main stair that enables occupants to travel between the building entrance floors and common use floors.	Floor Plans indicating main entrance and stairs.	**YES**
	Include seven (7) or more of the following features within the project.				
1	Floor re-entry	Make active modes of vertical circulation accessible at all floors	Classify regularly occupied floors for re-entry, allowing all building users to have access to and from these floors. Service floors do not need access for all users.	Floor plans indicating stairs	**Yes**
2	Stair visibility at all floors	Visual connection to active modes of vertical circulation	Make accessible stair visible from corridor by providing: •vision panels of 10 SF at each door •side light of 10 SF. •providing open stair.	Floor plan, door schedule and door elevation	**No**
3	Stair connectivity to building occupants	Stair accessibility for building occupants	Provide access to at least one (1) open or interconnecting stair to 50% of occupied floors	Floor Plans indicating stairs.	**Yes**
4	Stair visibility from main lobby	Visual connection to main lobby	Position at least one active mode of vertical circulation to be visible from main building lobby with 25 feet maximum travel from edge of lobby to entry of active vertical circulation. No turns should be required to reach stairs from the lobby.	Floor plans indicating travel distance from main lobby to stair.	**No**
5	Location - visibility	Visual connection to active mode of vertical circulation	Position at least one active mode of vertical circulation within the field of vision for users when standing in front of motorized modes of vertical circulation.	Plan drawing showing stair immediately adjacent to elevator	**Yes**
6	Lighting	Make active vertical circulation areas a desirable space through enhanced lighting	Provide level of lighting in staircase consistent with or better than that provided for the building corridor.	Photometrics for stair and adjacent corridor.	**Yes**
7	Daylighting	Make active vertical circulation areas a desirable space through natural lighting	Provide windows/skylight of at least 8 SF at each floor level of the active circulation space.	Building elevation indicating window area at each floor @ stair.	**Yes**
8	Signage prompt at active vertical circulation	Encourage active modes of vertical circulation over motorized modes of vertical circulation	Include permanent signage promoting stair use at elevator call area and at outside of stair door at each floor of the active vertical circulation.	Floor plans indicating sign locations and signage detail.	**Yes**
9	Artwork	Make active vertical circulation areas a desirable space through the addition of artwork	Provide artwork in the active circulation area.	Artwork location not in vertical circulation	**No**
10	Recreational space	Provide opportunities for on-site recreation	For projects with 10 classrooms or more, provide an on-site recreational space with exercise opportunities for both staff and children. Exercise space must be at least 400 SF and include exercise equipment for use by at least 5% of FTE occupants. Gardening activity can count as staff active recreation space and equipment.	Floor plan showing exercise room with equipment layout, FTE calculation, and narrative. Site plan indicating garden area (if applicable).	**No**

04/30/2016

Page 1 of 1

A 3.1 Enhanced Commissioning

This credit will not be pursued and *not feasible*.

A 3.2 Optimize Energy Performance

This credit is *feasible* and will be pursued. An energy model documenting specific project conditions has been generated and included in this 100% Resubmission in order to determine the amount of achievable credits as deemed by the GSG committee.

Refer to Energy Model Report, Baseline Input-Output and Checklist in the separated volume Energy Model Report on Page 285.

A 3.3 On-Site Renewable Energy

This credit is optional and will not be pursued and *not feasible*

A 3.4 Enhanced Energy Management System Controls, HVAC and Hot Water Systems

This credit will not be pursued and *not feasible*.

Optional – IEQ

A 4.1 Low-Emitting Materials, Ceiling and Wall Systems

This credit is optional and will not be pursued and *not feasible*

Optional – Education

A 5.1 The School Building as a Teaching Tool

This credit is optional and will not be pursued and *not feasible*

This page intentionally left blank.

SUPPORTING DOCUMENTATIONS

DESIGN DEVELOPMENT SUBMISSION - 100%

P.S. 320X - NEW BUILDING

LLW No. 107404

- S1.2R – Site Selection – NYS Environmental Letter....75
- S1.2R – Site Selection – NYS Environmental Resource Mapper....76
- S1.2R – Site Selection – FEMA Flood Hazard Resources Map....77
- S1.2R – Site Selection – Federally Listed Endangered Species List....78
- S1.3R – Sustainable Site Building Layout – Analysis 1....79
- S1.3R – Sustainable Site Building Layout: Analysis 2/3 – Shadow Plot Plans – June....80
- S1.3R – Sustainable Site Building Layout: Analysis 2/3 – Shadow Plot Plans - September....81
- S1.3R – Sustainable Site Building Layout: Analysis 2/3 – Shadow Plot Plans – December....82
- S1.3R – Sustainable Site Building Layout: Analysis 4 – Wind Analyses....83
- S1.4 – Development Density & Community Connectivity....84
- S1.4 – Development Density & Community Connectivity – Oasis Map....85
- S1.5R – Joint Use of Facilities, Community Access....86
- S1.6P – Environmental Site Assessment....87
- S2.1 – Alternative Transportation, Public Transportation Access....95
- S3.1/S3.2 Site Development....96
- E 4.1P – Minimum Energy Performance Lighting Density Diagrams....97
- Q 1.1P – Minimum IAQ Performance, ASHRAE Outdoor Air Assessment Report....105
- Q 5.1R – Controllability of Systems, Lighting Lighting Plans....109
- Q 7.4 – Daylight & Views, Views....117
- Q8.1P/Q8.2/Q8.3 – Acoustical Report....121
- Q8.1P/Q8.2/Q8.3 – Acoustical Compliance Letter....130
- Mechanical Load Calculations, Major Equipment Cut Sheet – 100%....133
- Selected Mechanical Drawings....141
- **Specification Table of Contents and the list of drawings - 100%....261**

This page intentionally left blank.

Supporting Documentations:

S1.2R - Site Selection - N.Y.S. Environmental Letter

NEW YORK STATE DEPARTMENT OF ENVIRONMENTAL CONSERVATION

Division of Fish and Wildlife, New York Natural Heritage Program
625 Broadway, Fifth Floor, Albany, NY 12233-4757
P: (518) 402-8935 | F: (518) 402-8925
www.dec.ny.gov

February 16, 2018

Joán M. Peña, AIA
di Domenico + Partners, LLP
3743 Crescent Street, Third Floor
Long Island City, NY 11101

Re: Public School in the West Farms Section of the Bronx, 1559 - 1560 Boone Avenue
County: Bronx Town/City: City Of New York

Dear Joán:

In response to your recent request, we have reviewed the New York Natural Heritage Program database with respect to the above project.

We have no records of rare or state-listed animals or plants, or significant natural communities at the project site or in its immediate vicinity.

The absence of data does not necessarily mean that rare or state-listed species, significant natural communities, or other significant habitats do not exist on or adjacent to the proposed site. Rather, our files currently do not contain information that indicates their presence. For most sites, comprehensive field surveys have not been conducted. We cannot provide a definitive statement on the presence or absence of all rare or state-listed species or significant natural communities. Depending on the nature of the project and the conditions at the project site, further information from on-site surveys or other resources may be required to fully assess impacts on biological resources.

This response applies only to known occurrences of rare or state-listed animals and plants, significant natural communities, and other significant habitats maintained in the Natural Heritage database. Your project may require additional review or permits; for information regarding other permits that may be required under state law for regulated areas or activities (e.g., regulated wetlands), please contact the NYS DEC Region 2 Office, Division of Environmental Permits, as listed at www.dec.ny.gov/about/39381.html.

Sincerely,

Andrea Chaloux

Andrea Chaloux
Environmental Review Specialist
New York Natural Heritage Program

105

NEW YORK STATE OF OPPORTUNITY | Department of Environmental Conservation

Supporting Documentations:

S1.2R - Site Selection - N.Y.S. Environmental Resource Mapper

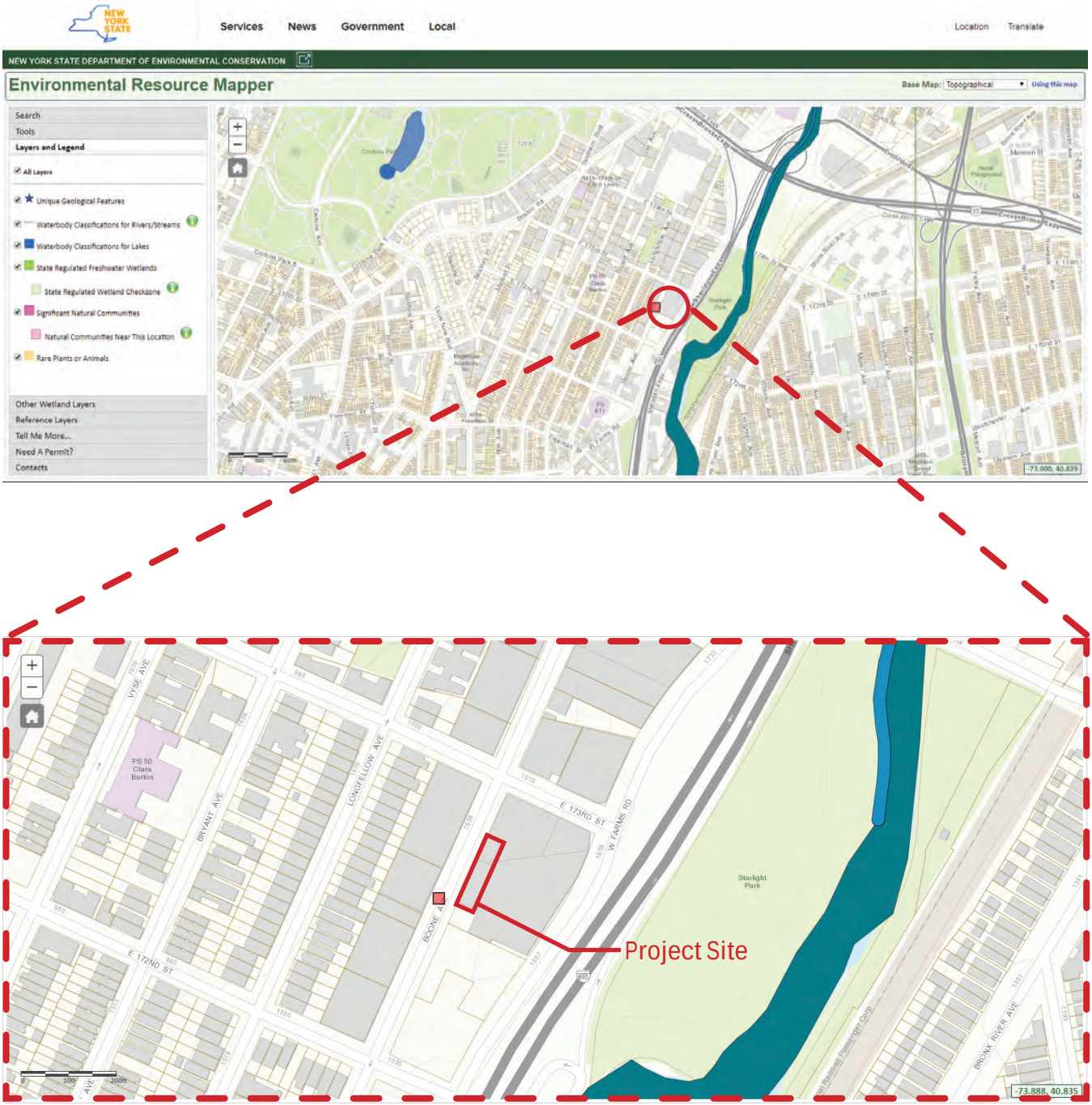

Supporting Documentations:

S1.2R - Site Selection - FEMA Flood Hazard Resources Map

2/13/2018 FEMA Flood Hazard Resources Map

FEMA Flood Hazard Resources Map

Advisory Base Flood Elevation Layers

Advisory Zone V-A Boundary (zoom in to make visible)

Limit of Moderate Wave Action (LiMWA) (zoom in to make visible)

Advisory Shaded Zone X (zoom in to make visible)

Advisory Base Flood Elevation Zones (zoom in to make visible)

Advisory Zones V and A (zoom in to make visible)

- A
- V

National Flood Hazard Layer (Official)

Flood Hazard Boundaries

- Limit Lines
- SFHA / Flood Zone Boundary
- Other Boundaries

Updated flood hazard data available for recovery and rebuilding efforts in Sandy affected counties in NJ and NY

300ft

FEMA | New York State, Microsoft | NYC OpenData, Esri, HERE, Garmin, INCREMENT P, USGS, EPA, NPS, US Census Bureau, USDA

Supporting Documentations:

S1.2R - Site Selection - Federally Listed Endangered Species List

FEDERALLY LISTED ENDANGERED AND THREATENED SPECIES AND CANDIDATE SPECIES IN NEW YORK (By County)

This list represents the best available information regarding known or likely County occurrences of Federally-listed and candidate species and is subject to change as new information becomes available.

COUNTY Common Name	Scientific Name	Status
ALBANY		
Bald eagle	*Haliaeetus leucocephalus*	D
Bog turtle *(Historic)*	*Clemmys [=Glyptemys] muhlenbergii*	T
Indiana bat (W/S)[3]	*Myotis sodalis*	E
Karner blue butterfly	*Lycaeides melissa samuelis*	E
ALLEGANY		
Bald eagle[2]	*Haliaeetus leucocephalus*	D
BRONX[2]		
BROOME		
Bald eagle[2]	*Haliaeetus leucocephalus*	D

E=endangered T=threatened P=proposed C=candidate D=delisted

W=winter S=summer - Please note that the Indiana bat may occur in additional counties but we have listed the counties with the greatest likelihood of Indiana bat presence.

[1] Except for sea turtle nesting habitat, principal responsibility for these species is vested with the National Oceanic and Atmospheric Administration Fisheries. Please visit the following website for more information http://www.nmfs.noaa.gov/pr/species/esa.htm.

[2] Except for occasional transient individuals, no Federally-listed or proposed endangered or threatened species, or candidate species under our jurisdiction are known to exist in these counties.

[3] While Indiana bats were known to winter in Albany County, we now believe they are likely extirpated or in such small numbers that it is unlikely that they would be present and impacted by any specific proposed projects in Albany, Rensselaer, Saratoga, Schenectady, and Schoharie Counties. This determination may change as we receive new information.

[4] Piping plovers are found in Suffolk and Nassau County; however, their early successional habitat is only found at the shoreline, on barrier islands, sandy beaches, and dredged material disposal islands. Please see the fact sheet at http://nyfo.fws.gov/es/PipingPloverFactSheet07.pdf for more information on suitable habitat.

Supporting Documentations:

S1.3R - Sustainable Site and Building Layout - Analysis 1: Identify Roof Location for Potential Renewable Energy

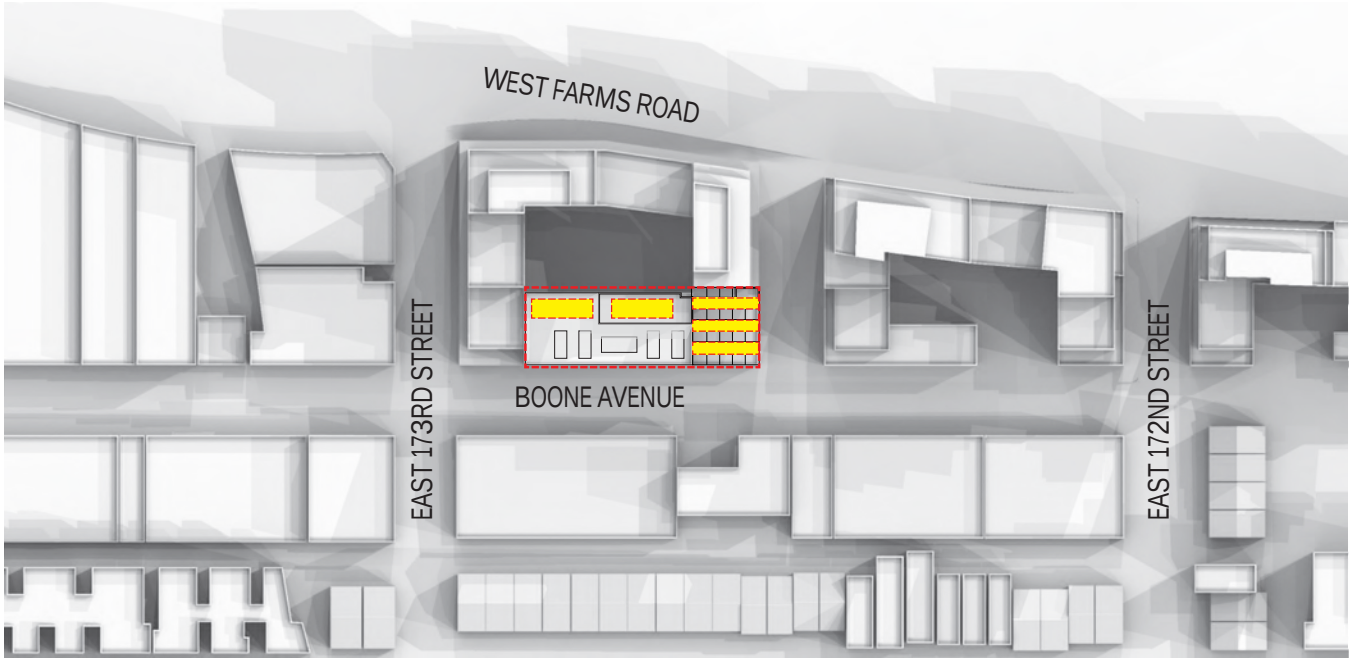

N

Legend	
	Potential locations for PV (photovoltaic module installation.
	Project location

Note:
This digram is a combination of all shadow plot plans of the site to demonstrate the potentail locations of PV. Refer to Shadow plot plans Diagrams S1.3.

Supporting Documentations:

S1.3R - Sustainable Site and Building Layout - Analysis 2/3: Shadow Plot Plans - June

Key Plan

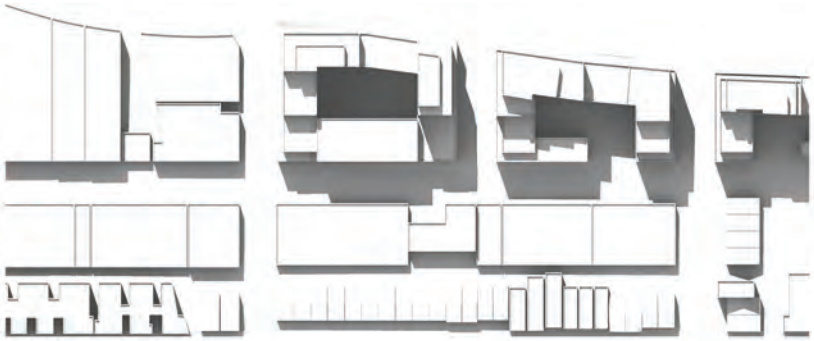
JUNE 21, 9AM

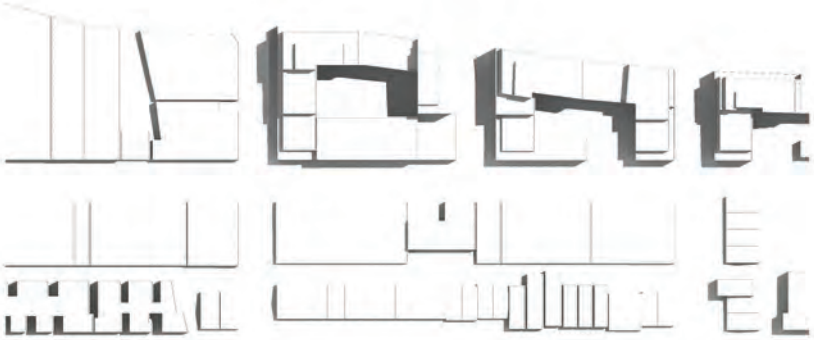
JUNE 21, 12PM

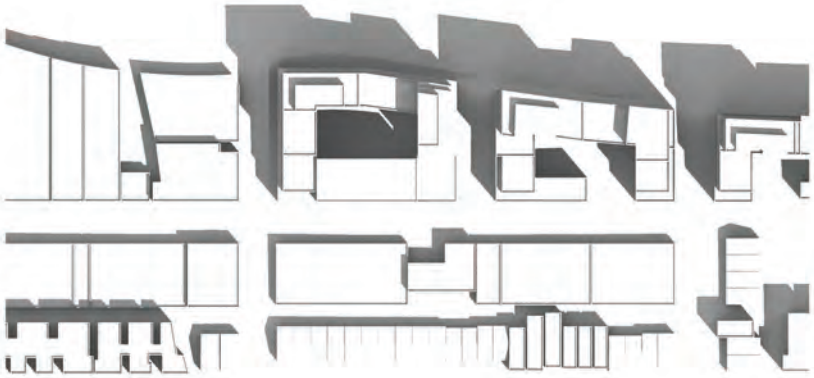

Supporting Documentations:

S1.3R - Sustainable Site and Building Layout - Analysis 2/3: Shadow Plot Plans - September

Key Plan

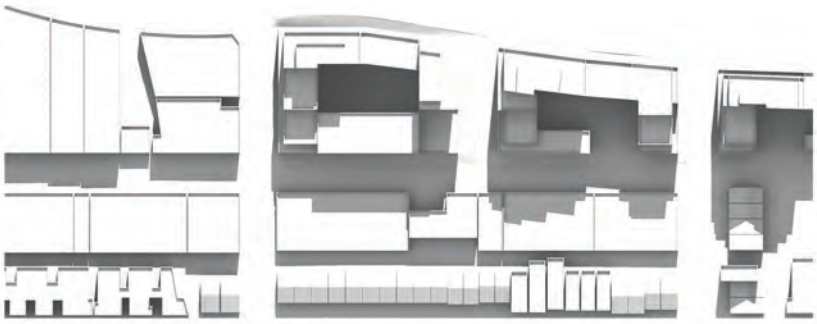

SEPT. 21, 9AM

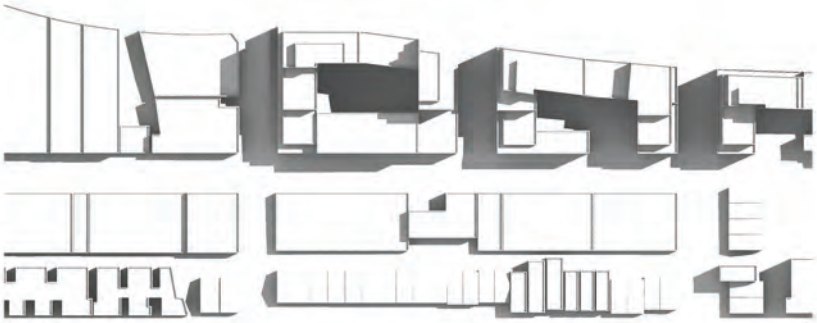

SEPT. 21, 12PM

SEPT. 21, 3PM

Supporting Documentations:

S1.3R - Sustainable Site and Building Layout - Analysis 2/3: Shadow Plot Plans - December

Key Plan

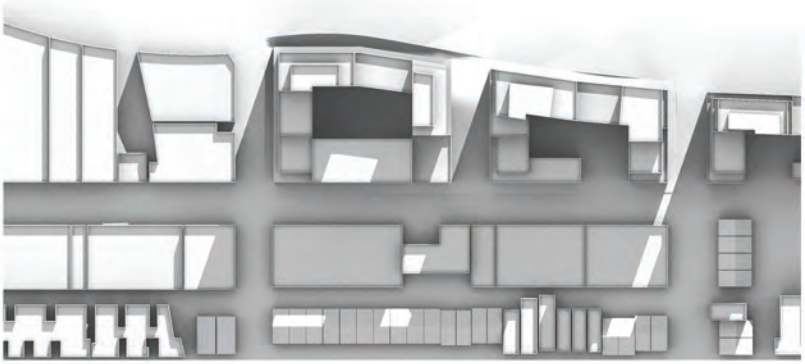
DEC. 21, 9AM

DEC. 21, 12PM

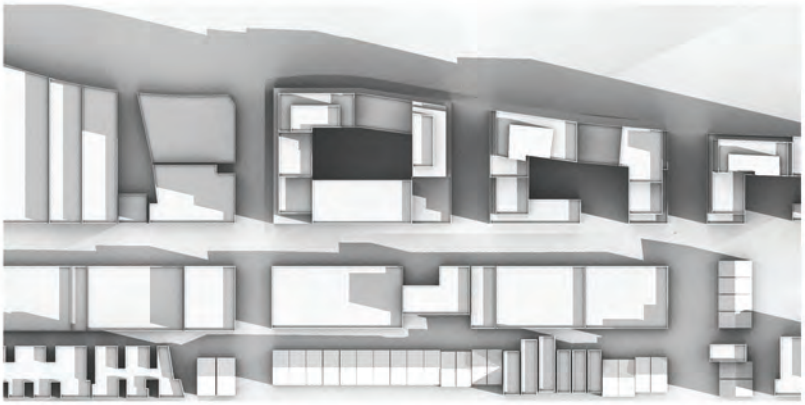
DEC. 21, 3PM

Supporting Documentations:

S1.3R - Sustainable Site and Building Layout - Analysis 4: Wind Analyses

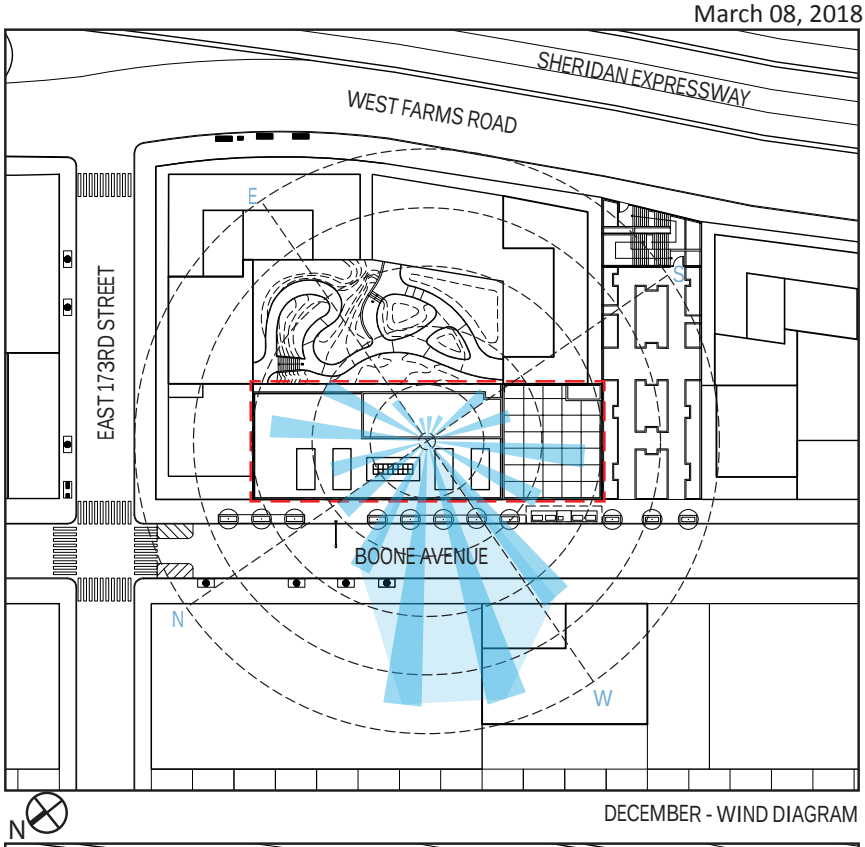

DECEMBER - WIND DIAGRAM

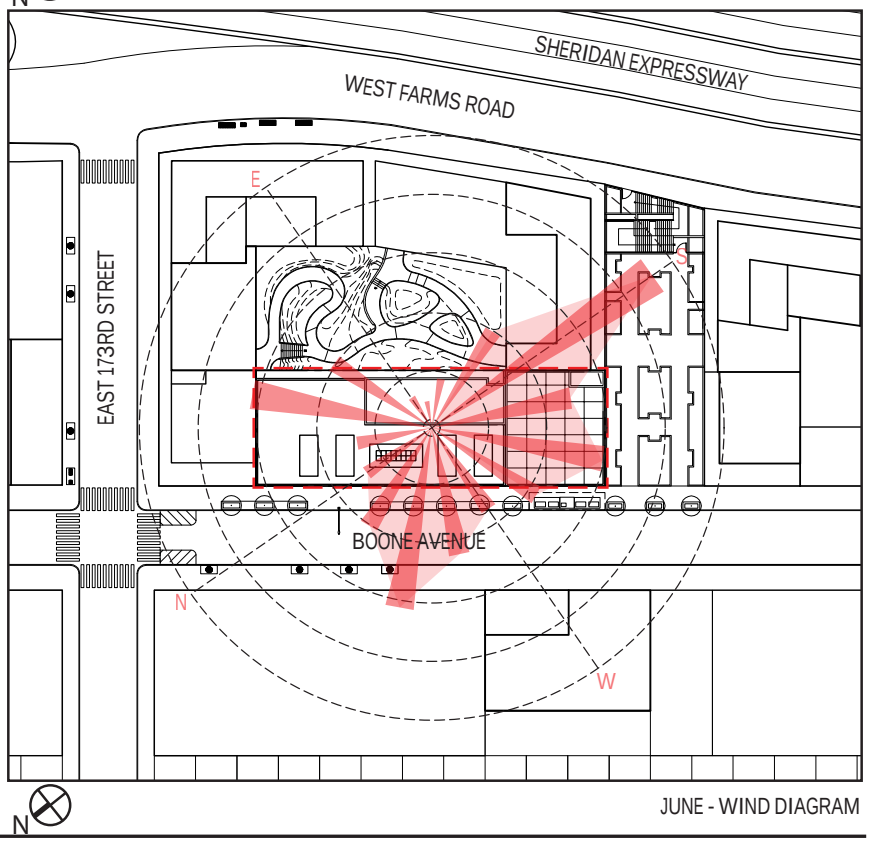

JUNE - WIND DIAGRAM

Supporting Documentations:

S1.4 - Development Density & Community Connectivity

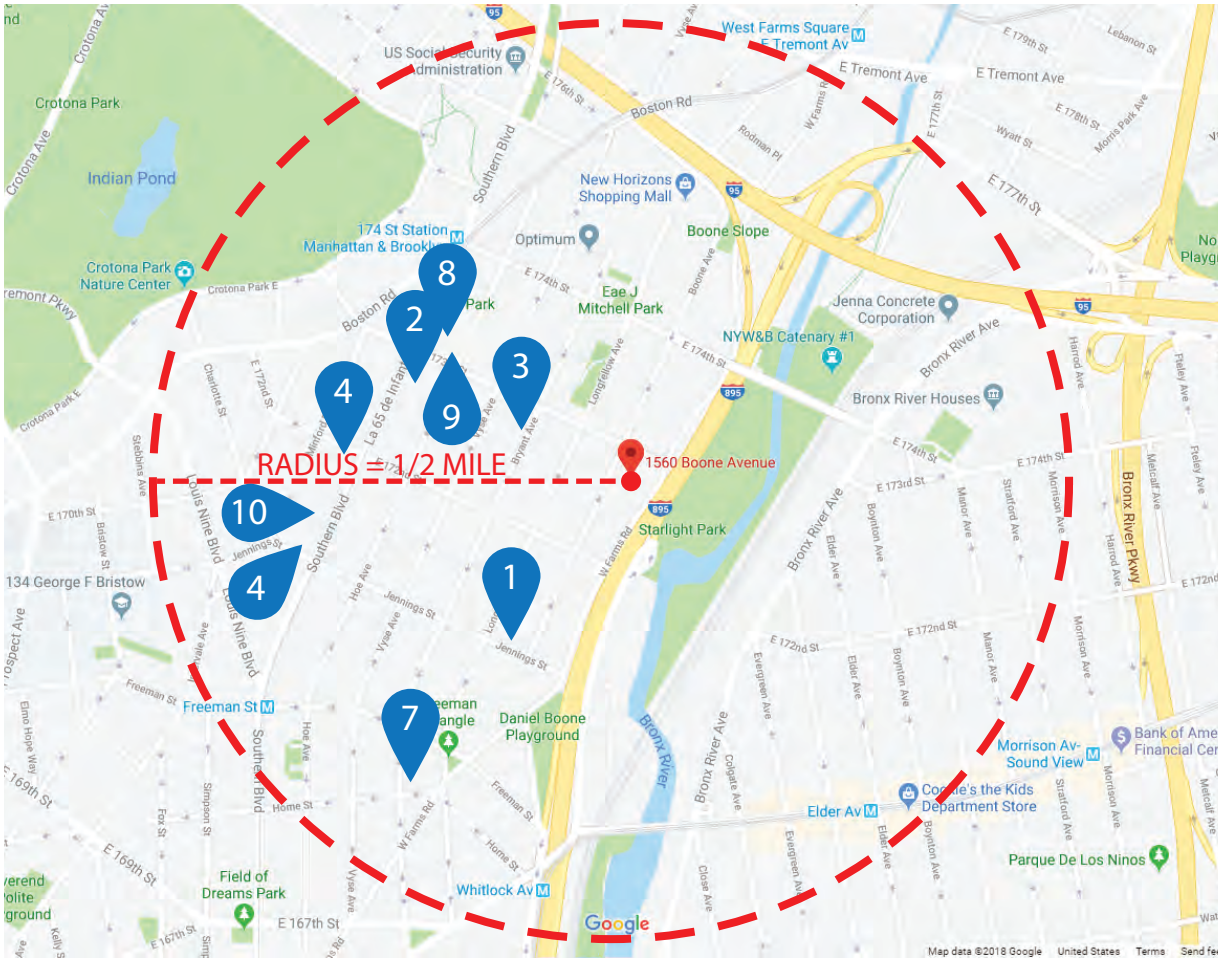

Plan Key Identification	Business Name within 1/2 mile (2,640 feet) radius and accessible by pedestrian access	Service Type
1	PS 66X - School of Higher Expectations	Education
2	Western Beef Supermarket	Super Market
3	First Bloom Group Family Day Care	Day Care
4	Casa Boricua Senior Center	Senior Center
5	CitiBank	Bank
6	E 174th Street Pharmacy	Pharmacy
7	Hickory Hill Baptist Church	Place of Worship
8	Magic Coin Laundromat	Laundry
9	Madison Square Boy's & Girl's Club	Community Center
10	Plaza del Castillo Health Center	Medical Facility

Supporting Documentations:

S1.4 - OASIS MAP & DENSITY CHART

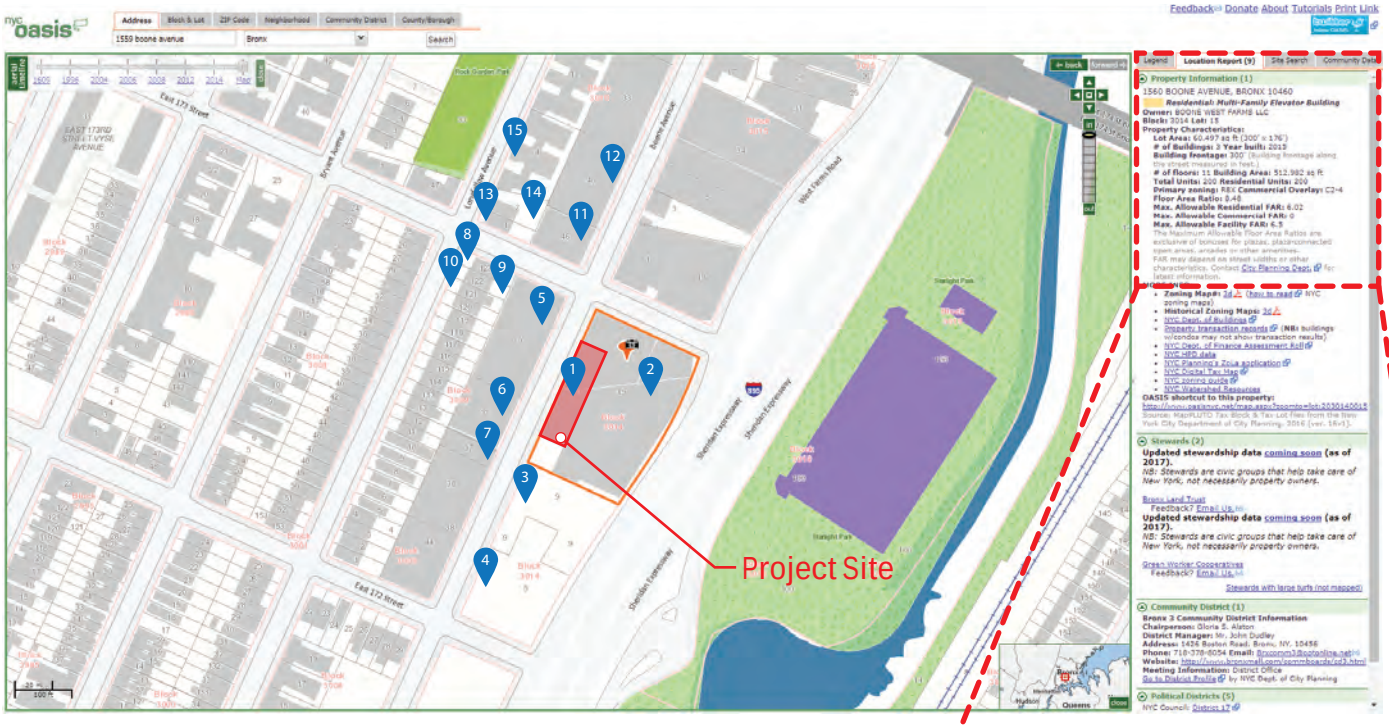

Option 2 - Development Density Density radius within which lots must be included = 3 X √ (site area in sf) =						364.596
Sequential Number Assigned to Lot	**Block No.**		**Lot No.**	**Lot Area in SF**	**Lot Area in Acres**	**Gross Building Square Footage per lot***
Project Site:	1	3014	15	14,770	0.34	13,989
	2	3014	15	60,497	1.39	512,982
	3	3014	9	21,822	0.50	13,424
	4	3014	5	24,381	0.56	0
	5	3009	25	19,700	0.45	19,700
	6	3009	33	10,000	0.23	10,000
	7	3009	37	3,750	0.09	3,700
	8	3009	123	2,500		2,400
	9	3009	122	2,500		2,400
	10	3009	121	2,500		2,650
	11	3010	46	7,500		15,000
	12	3010	40	14,975		14,975
	13	3010	1	2,500		2,650
	14	3010	2	4,961		2,650
	15	3010	4	15,000		66,258
[insert rows as necessar						
	Combined Total Lot Area in SF			207,356		
	Combined Total Lot Area in Acres				3.56	
	Combined Total Building Gross Area in SF					682,778
	Development Density = SF/Acre of Gross Bulding Square Footage =					191,982
	If number above is greater than or equal to 60,000 sf/acre, then project complies using this criteria.					

Legend | **Location Report (9)** | Site Search | Community Data

Property Information (1)

1560 BOONE AVENUE, BRONX 10460

Residential: Multi-Family Elevator Building

Owner: BOONE WEST FARMS LLC
Block: 3014 **Lot:** 15
Property Characteristics:
Lot Area: 60,497 sq ft (300' x 176')
# of Buildings: 3 **Year built:** 2015
Building frontage: 300' (Building frontage along the street measured in feet.)
# of floors: 11 **Building Area:** 512,982 sq ft
Total Units: 200 **Residential Units:** 200
Primary zoning: R8X **Commercial Overlay:** C2-4
Floor Area Ratio: 8.48
Max. Allowable Residential FAR: 6.02
Max. Allowable Commercial FAR: 0
Max. Allowable Facility FAR: 6.5
The Maximum Allowable Floor Area Ratios are exclusive of bonuses for plazas, plaza-connected open areas, arcades or other amenities.
FAR may depend on street widths or other characteristics. Contact City Planning Dept. for latest information.

Supporting Documentations:

S1.5R - Joint use of Facilities, Community Access

FIRST FLOOR

BOONE AVE.

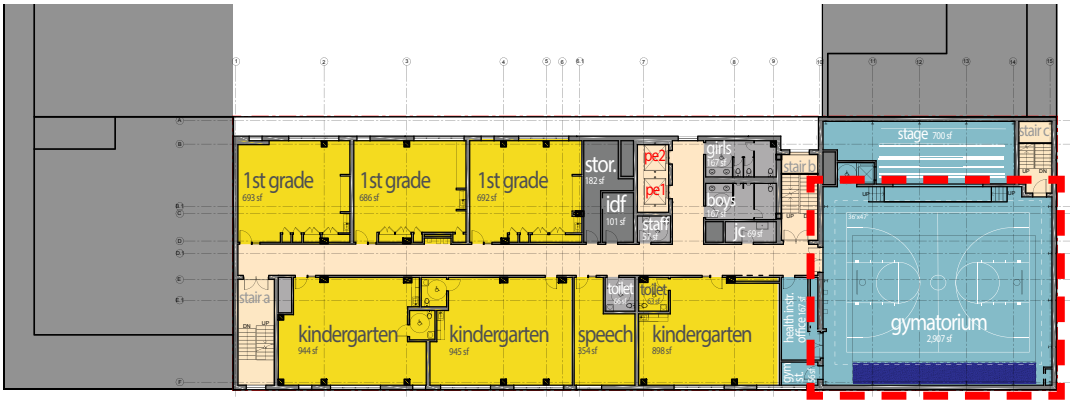

SECOND FLOOR

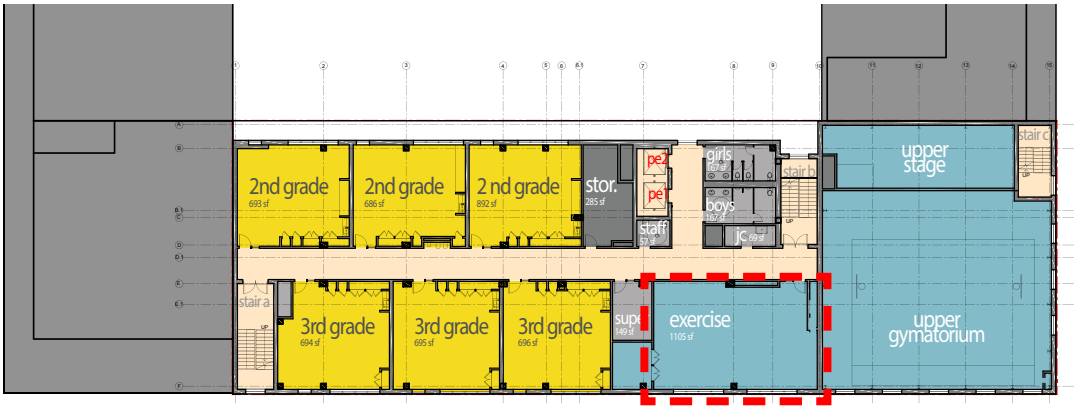

THIRD FLOOR

COMMUNITY ACCESSIBLE SPACES

Supporting Documentations:

S1.5R - Joint use of Facilities, Community Access

FOURTH FLOOR

FIFTH FLOOR

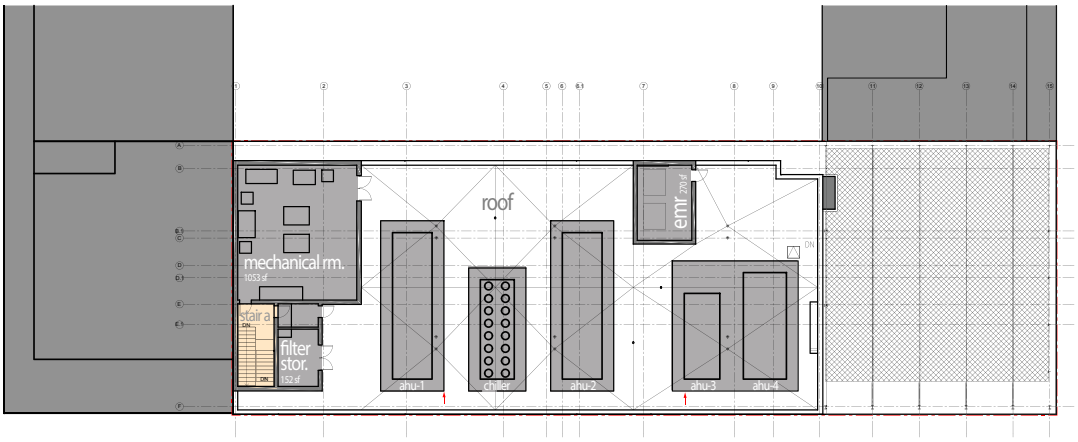

ROOF

COMMUNITY ACCESSIBLE SPACES

- PHASE I ENVIRONMENTAL SITE ASSESSMENT (AKRF, MAY 2008)

- PHASE II ENVIRONMENTAL SITE ASSESSMENT (AKRF, MAY 2008)

- PHASE II ENVIRONMENTAL SITE ASSESSMENT (LANGAN, MAY 2017)

PHASE I ENVIRONMENTAL SITE ASSESSMENT (AKRF, MAY 2008)

AKRF

AKRF, Inc.
440 Park Avenue South New York, NY 10016
212-696-0670

Submitted to:

Signature Urban Properties, LLC
853 Broadway, Suite 2014
New York, NY 10003

PHASE I ENVIRONMENTAL SITE ASSESSMENT

1559 & 1560 Boone Avenue
Bronx, New York

Project Number: 11068

May 2008

1559 & 1560 Boone Avenue

Tax Block 3009, Lot 33 & Tax Block 3014, Lot 15

BRONX, NEW YORK

Phase II Subsurface Investigation

AKRF Project Number: 11068

Prepared for:

Signature Urban Properties, LLC
853 Broadway, Suite 2014
New York, NY 10003

Prepared by:

AKRF, Inc.
440 Park Avenue South
New York, NY 10016
212-696-0670

MAY 2008

AKRF
Environmental and Planning Consultants

440 Park Avenue South
New York, NY 10016
tel: 212 696-0670
fax: 212 213-3191
www.akrf.com

May 9, 2008

Mr. Eli Liedman
Director of Development, Signature Urban Properties, LLC
853 Broadway, Suite 2014
New York, NY 10003

Re: Phase I Environmental Site Assessment
1559 & 1560 Boone Avenue, Bronx, New York
AKRF Project Number 11068

Dear Mr. Liedman:

AKRF, Inc. is pleased to submit this Phase I Environmental Site Assessment Report for the above-referenced site. This report includes the findings of a site inspection, an evaluation of available historical information, the interpretation of selected federal and state environmental databases, and a review of selected New York City Buildings Department records. AKRF, Inc. met the requirements of American Society for Testing and Materials (ASTM) as established by ASTM Standard E1527-05 unless noted otherwise in Sections 9.0, 10.0 and 11.0.

We appreciate the opportunity to provide you with our services. If you should have any questions or comments regarding the enclosed report, please do not hesitate to contact us.

Sincerely,
AKRF, Inc.

Marcus Simons
Senior Vice President

p.p. Anya Klein
Chad Ondrusek
Environmental Scientist

Enc.

PHASE II ENVIRONMENTAL SITE ASSESSMENT (AKRF, MAY 2008)

AKRF

AKRF, Inc.
440 Park Avenue South New York, NY 10016
212-696-0670

Submitted to:

Signature Urban Properties, LLC
853 Broadway, Suite 2014
New York, NY 10003

SUBSURFACE (PHASE II) INVESTIGATION

1559 & 1560 Boone Avenue
Bronx, New York

Project Number: 11068

May 2008

1559 & 1560 Boone Avenue

BRONX, NEW YORK

Subsurface (Phase II) Investigation Report

AKRF Project Number: 11068-0002

Prepared for:

Signature Urban Properties, LLC
853 Broadway, Suite 2014
New York, NY 10003

Prepared by:

AKRF, Inc.
440 Park Avenue South
New York, NY 10016
212-696-0670

MAY 2008

PHASE II ENVIRONMENTAL SITE INVESTIGATION REPORT
OF
PROPOSED NEW SCHOOL SITE

1560 BOONE AVENUE, PARCEL 3C
BRONX, NEW YORK 10460
TAX BLOCK 3014, PORTION OF LOT 15

SCA LLW NO. 107404
SCA CONTRACT NO. C000014342
SCA JOB NO. 65966

CONSULTANT PROJECT NO. 170431015

MAY 18, 2017

Prepared by:

LANGAN

Langan Engineering, Environmental, Surveying & Landscape Architecture, D.P.C.
21 Penn Plaza 360 W 31st Street, 8th
New York, NY 10001
Phone: (212) 479-5400
Fax: (212) 479-5444
Attn.: Mimi Raygorodetsky

Prepared for:

SCA School Construction Authority

NYCSCA

30-30 Thomson Avenue
Long Island City, NY 11101-3045
Phone: (718) 472-8502
Fax: (718) 472-8500
Attn.: Lee Guterman

Supporting Documentations:

S2.1 - Alternative Transportation, Public Transportation Access

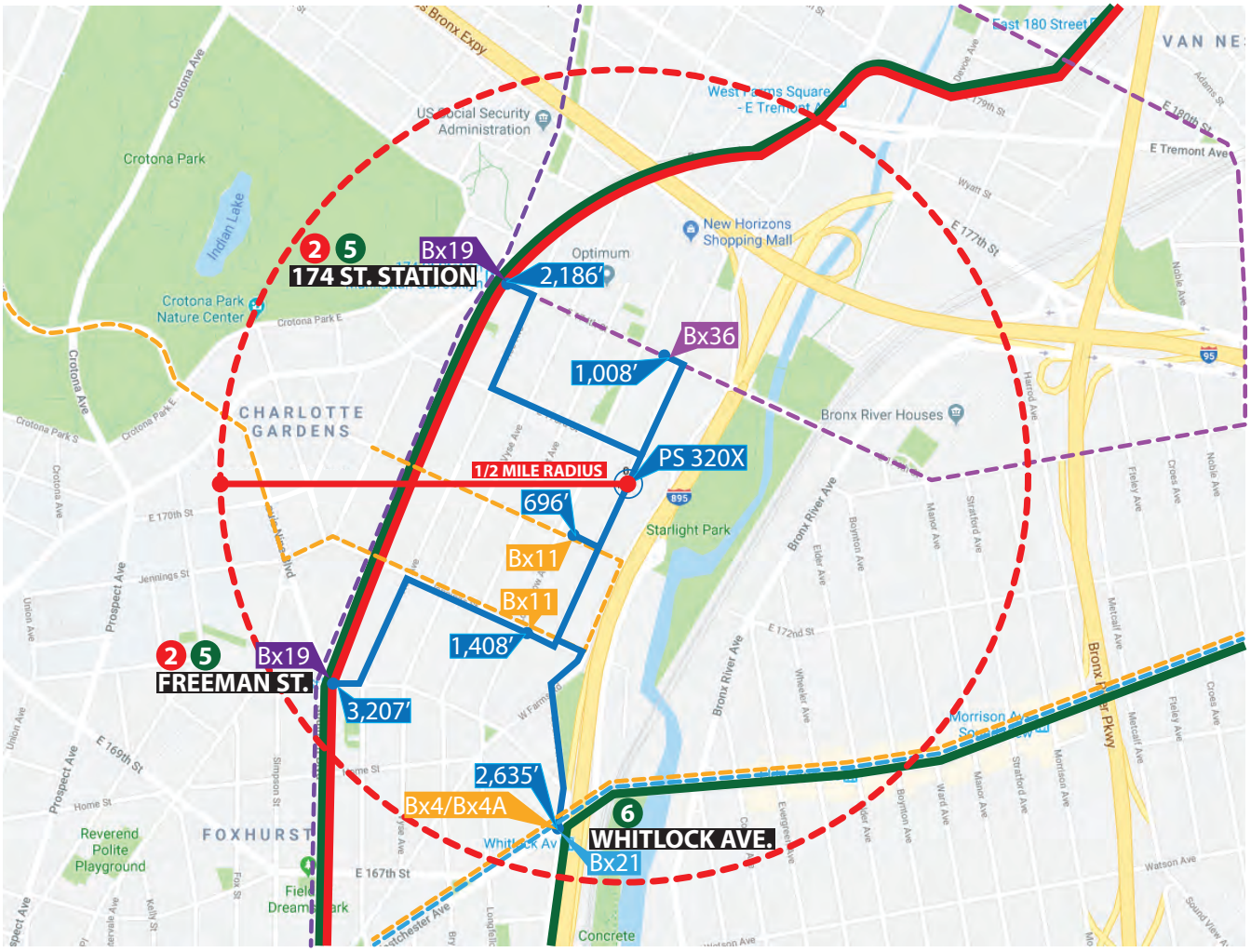

LEGEND			
	WALKING PATH TO STOP/STATION FROM SCHOOL	3,207'	DISTANCE FROM SCHOOL ENTRANCE IN FEET
PS 320X	LOCATION OF SCHOOL	Bx4	BUS STOP
2 5 6 SUBWAY	SUBWAY STATION AND LINE		BUS ROUTES
	1/2 MILE RADIUS		SUBWAY LINE

Supporting Documentations:

S3.1 - Site Development, Protect or Restore Habitat
S3.2 - Site Development, Maximize Open Space

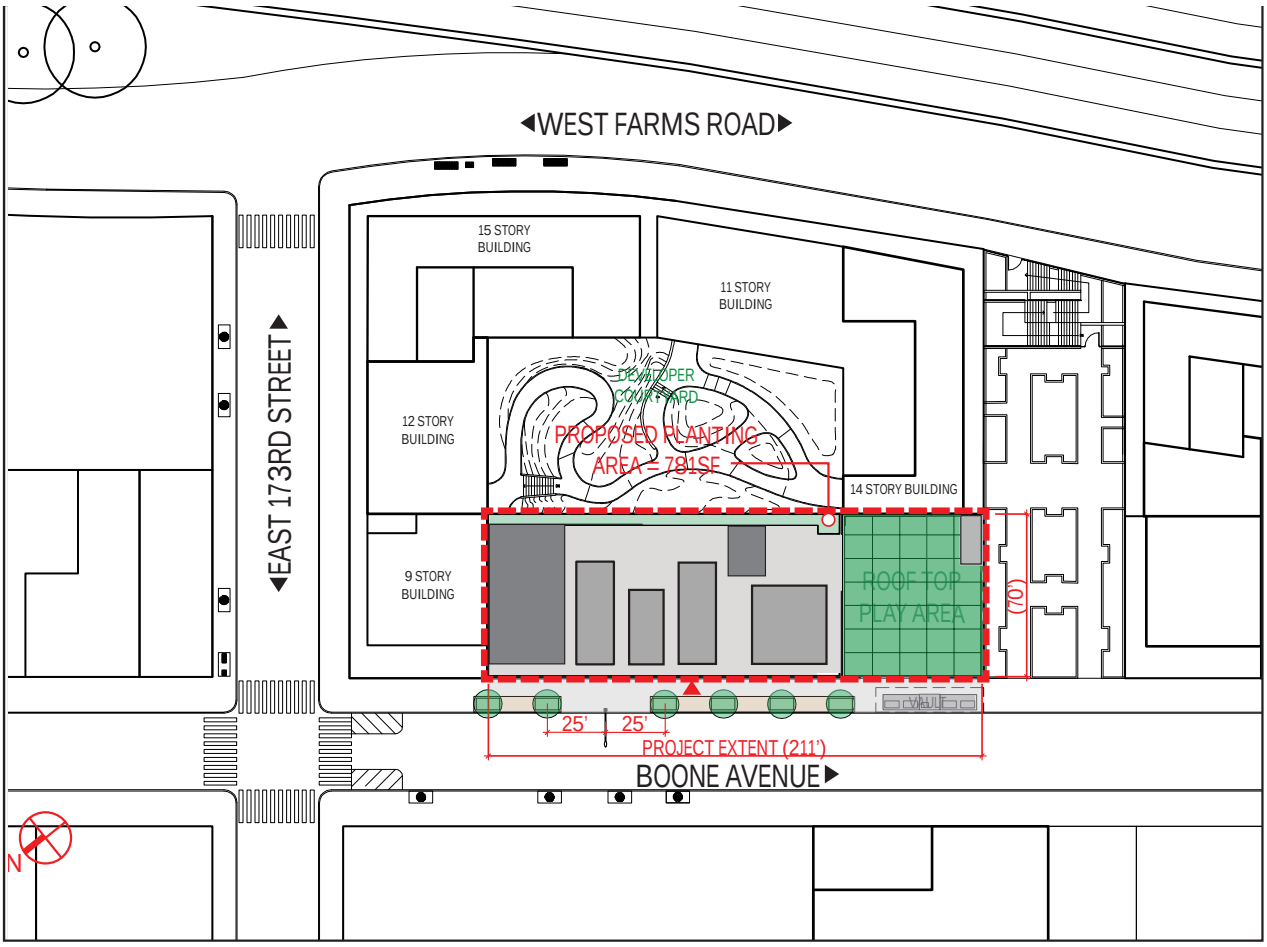

S3.1 - SITE DEVELOPMENT, PROTECT OR RESTORE HABITAT

Total Site Area (including sidewalks): 17,900 SF

Site Area (total site area minus building footprint)
BUILDING FOOTPRINT: 13,990 SF
17,900 - 13,990 = 3,910 SF

50% of Site Area: 3,910 x .5 = 1,955 SF
20% of Total Site Area: 17,990 x .2 = 3,580 SF

20% of total site is greater than 50% of Site Area, in order for CREDIT S3.1 to be achieved, 3,580SF is to be planted at minimum.

ONLY 780 SF OF SITE IS DEDICATED TO VEGITATION

PROJECT SITE

MAIN ENTRANCE

S3.2 - SITE DEVELOPMENT, MAXIMIZE OPEN SPACE

Total Site Area (GSG Credit Site Area including sidewalks): 17,900 SF
Building Footprint: 13,990 SF
20% of Site Area excluding Building Footprint:
(17,900 – 13,990) x .2 = 780 SF

Thus, in order to earn S 3.2 credit, at least 780SF shall be vegetated open space. The proposed design has designated 781SF for open space within the project boundaries. This credit is feasible.

Pedestrian Oriented Hardscape (Concrete Sidewalk per NYC DOT): 3,130 SF
Vegetated Area within the Hardscape:
450SF = 9 trees (5'W x 10'L = 50sf)
(450/ 3130) x 100 = 14.3% < 25% of Concrete Sidewalk
211' (street frontage)/25' (per tree) = 8.44 = 9 trees (450 sf)
Due to the existing light pole and proposed utility vault only 6 trees will be provided on this project.

Supporting Documentations:

E 4.1P - Minimum Energy Performance

LIGHTING DENSITY DIAGRAMS

CELLAR
FIRST FLOOR
SECOND FLOOR
THIRD FLOOR
FOURTH FLOOR
FIFTH FLOOR
ROOF

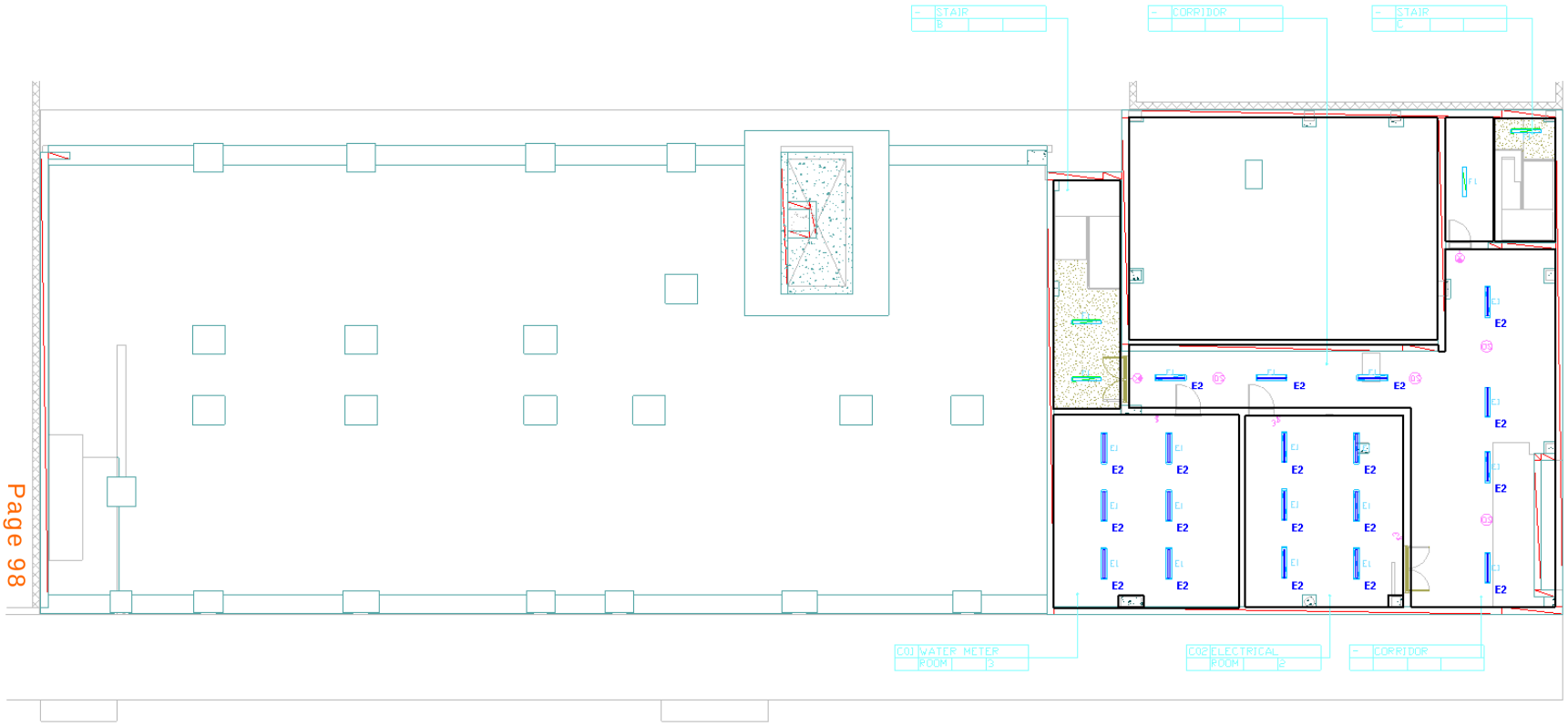

VISUAL

CELLAR

Luminaire Schedule

Symbol	Label	Quantity	Manufacturer	Catalog Number	Description	Lamp	Number Lamps	Filename	Lumens Per Lamp	Light Loss Factor	Wattage
	E2	19	Lithonia Lighting	ELIN L48 5000LM FST MVOLT 35K 80 CRI	ELIN 48" 5,000 Lumens Frosted Diffuser MVOLT 3,500 K 80CRI	LED	1	ELIN_L48_5000LM_FST_MVOLT_35K_80_CRI.ies	4489.375	0.9	34.31

Statistics

Description	Symbol	Avg	Max	Min	Max / Min	Avg / Min	Avg / Max
Corridor	+	18.6 fc	39.2 fc	5.2 fc	7.5:1	3.6:1	0.5:1
Electrical Room	+	38.6 fc	62.9 fc	16.1 fc	3.9:1	2.4:1	0.6:1
Water Meter	+	33.8 fc	63.1 fc	8.5 fc	7.4:1	4.0:1	0.5:1

Designer
O. OKROKOTO
Date
6/29/2018
Scale
Not to Scale
Drawing No.

Summary

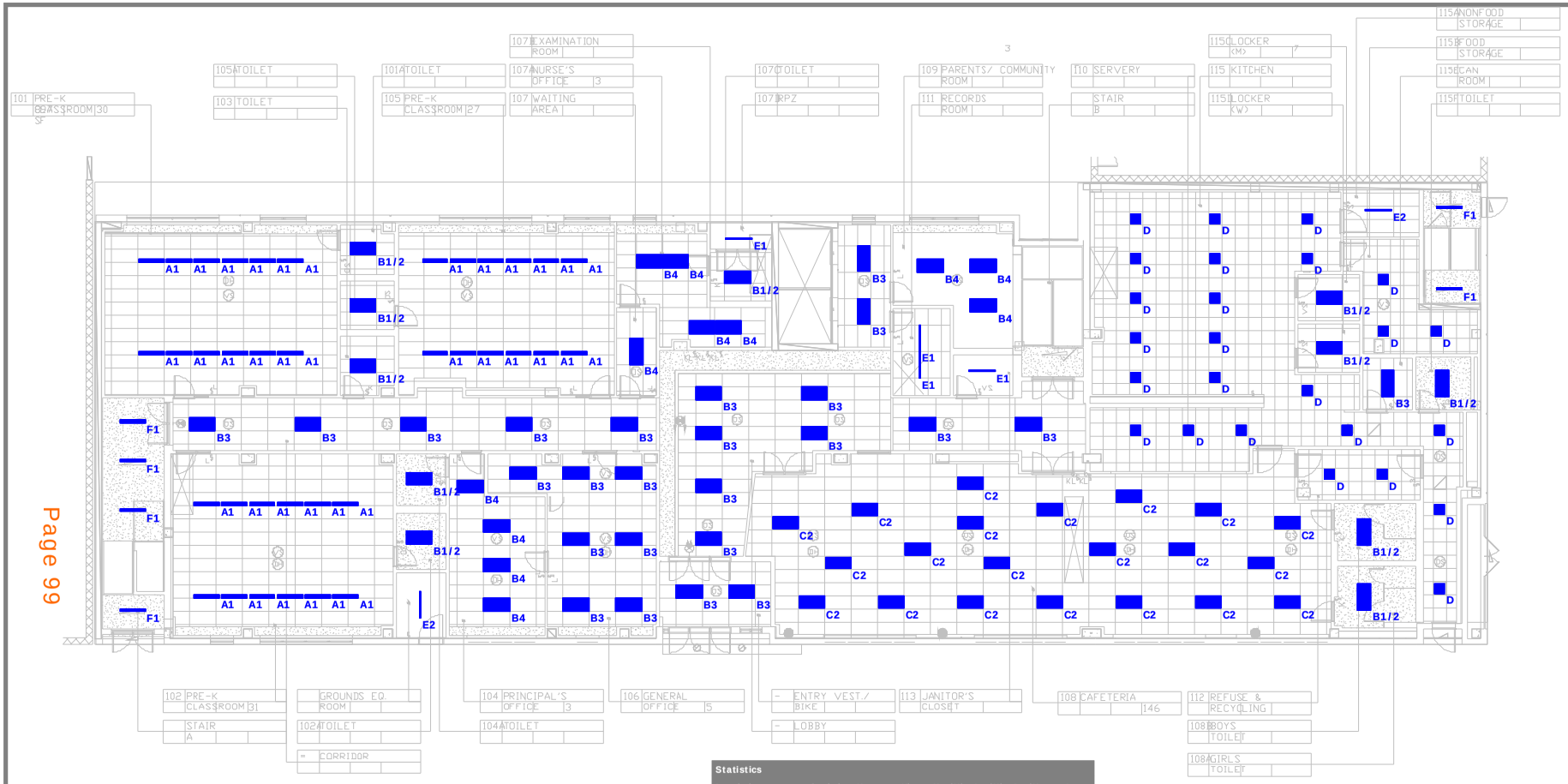

Page 99

Luminaire Schedule

Symbol	Label	QTY	Manufacturer	Catalog Number	Description	Lamp	Number Lamps	Filename	Lumens per Lamp	LLF	Wattage
	A1	36	Peerless Lighting	BRM9L 4FT 60CRI 35K ID60DLMF 120 TD/30	BRM9L 4FT 60CRI 35K ID60DLMF 120 TD/30		1	BRM9L_4FT_60CRI_35K_ID60DLMF_120_TD_30.ies	3391	0.9	24.31
	B1/2	11	Lithonia Lighting	2VTL4 40L ADPTEZ1 LP835	2 x 4 VTL 4000 NOMINAL LUMENS, 3500 K	LED	1	2VTL4_40L_ADPT_EZ1_LP835.ies	3673	0.9	33.15
	B3	25	Lithonia Lighting	2VTL4 48L ADPTEZ1 LP835	2 x 4 VTL 4800 NOMINAL LUMENS, 3500 K	LED	1	2VTL4_48L_ADPT_EZ1_LP835.ies	4840	0.9	39.1
	B4	12	Lithonia Lighting	2VTL4 60L ADPTEZ1 LP835	2 x 4 VTL 6000 NOMINAL LUMENS, 3500 K	LED	1	2VTL4_60L_ADPT_EZ1_LP835.ies	5491	0.9	44.2
	C2	21	Lithonia Lighting	2TL4 40L A12 MVOLT EZ1 LP835	2TL4 2X4 4000 NOMINAL LUMENS, A12 LENS, 3500K	LED	1	2TL4_40L_A12_MVOLT_EZ1_LP835.ies	3918	0.9	32
	D	25	Lithonia Lighting	2WRTL XX L24 7000LM XX AFL XX 35K 90CRI	2WRTL L24 7000LM AFL 35K 90CRI	LED	1	2WRTL_XX_L24_7000LM_XX_AFL_XX_35K_90CRI.ies	5750	0.9	60.64
	E1	4	Lithonia Lighting	ZLIN L48 3000LM FST MVOLT 35K 80 CRI	ZLIN 4 ft. 3,000 Lumens Frosted Diffuser MVOLT 3,500 K 80CRI	LED	1	ZLIN_L48_3000LM_FST_MVOLT_35K_80_CRI.ies	3225	0.9	25.15
	E2	2	Lithonia Lighting	ZLIN L48 5000LM FST MVOLT 35K 80 CRI	ZLIN 4 ft. 5,000 Lumens Frosted Diffuser MVOLT 3,500 K 80CRI	LED	1	ZLIN_L48_5000LM_FST_MVOLT_35K_80_CRI.ies	4489	0.9	34.31
	F1	6	Lithonia Lighting	WL4 40L LP835	WL4 4ft 4000 NOMINAL LUMENS 3500K	LED	1	WL4_40L_LP835.ies	4124	0.9	39.48

Statistics

Description	Symbol	Max	Min	Max/Min	Avg/Min	Avg/Max	Avg
Boys Toilet	+	26.0 fc	9.3 fc	2.8:1	1.9:1	0.7:1	17.9 fc
Cafeteria	+	53.5 fc	14.8 fc	3.6:1	2.4:1	0.7:1	35.4 fc
Can Wash	+	38.1 fc	25.8 fc	1.5:1	1.2:1	0.8:1	31.5 fc
Corridor	+	44.5 fc	6.8 fc	6.5:1	3.6:1	0.6:1	24.6 fc
Food Storage 115	+	67.6 fc	22.2 fc	3.0:1	2.2:1	0.7:1	48.9 fc
General Office	+	57.2 fc	25.0 fc	2.3:1	1.8:1	0.8:1	45.0 fc
Girls Toilet	+	26.5 fc	8.6 fc	3.1:1	1.9:1	0.6:1	16.6 fc
Grounds Equipment Room	+	46.8 fc	17.0 fc	2.8:1	1.7:1	0.6:1	28.5 fc
Janitors 118	+	34.1 fc	16.7 fc	2.0:1	1.5:1	0.7:1	25.2 fc
Kitchen	+	87.3 fc	16.2 fc	5.4:1	3.6:1	0.7:1	57.6 fc
Kitchen Corridor	+	54.6 fc	26.1 fc	2.1:1	1.5:1	0.7:1	39.5 fc
Lobby	+	39.4 fc	21.7 fc	1.8:1	1.4:1	0.8:1	31.3 fc
Locker 115C	+	24.1 fc	15.7 fc	1.5:1	1.2:1	0.8:1	19.4 fc
Locker 115D	+	24.1 fc	15.7 fc	1.5:1	1.2:1	0.8:1	19.4 fc
NonFood Storage 115A	+	47.9 fc	13.3 fc	3.6:1	2.2:1	0.6:1	28.6 fc
Nurse 107	+	76.8 fc	21.7 fc	3.5:1	2.2:1	0.6:1	47.2 fc
Parents Community Room	+	62.6 fc	19.4 fc	3.2:1	2.1:1	0.6:1	40.6 fc
PreK 101	+	56.4 fc	18.5 fc	3.0:1	2.2:1	0.7:1	40.2 fc
PreK 102	+	56.5 fc	21.7 fc	2.6:1	1.9:1	0.7:1	41.1 fc
PreK 105	+	57.2 fc	22.3 fc	2.6:1	1.9:1	0.7:1	42.2 fc
Principal's Office	+	66.8 fc	20.2 fc	3.3:1	2.1:1	0.6:1	42.8 fc
Records Room 111	+	42.8 fc	19.7 fc	2.2:1	1.5:1	0.7:1	30.3 fc
Refuse and Recycling	+	59.8 fc	26.2 fc	2.3:1	1.7:1	0.8:1	45.4 fc
RPZ 107D	+	36.6 fc	16.7 fc	2.2:1	1.6:1	0.7:1	26.5 fc

Plan View

Statistics

Description	Symbol	Avg	Max	Min	Max/Min	Avg/Min	Avg/Max
Servery	+	42.7 fc	65.3 fc	15.5 fc	4.2:1	2.8:1	0.7:1
Stair A	+	22.1 fc	36.5 fc	11.0 fc	3.3:1	2.0:1	0.6:1
Stair B	+	20.5 fc	28.0 fc	14.1 fc	2.0:1	1.5:1	0.7:1
Toilet 101A	+	23.8 fc	29.7 fc	17.4 fc	1.7:1	1.4:1	0.8:1
Toilet 102A	+	23.1 fc	29.2 fc	17.0 fc	1.7:1	1.4:1	0.8:1
Toilet 103	+	22.9 fc	28.4 fc	17.2 fc	1.7:1	1.3:1	0.8:1
Toilet 104A	+	23.7 fc	29.4 fc	18.3 fc	1.6:1	1.3:1	0.8:1
Toilet 105A	+	24.7 fc	30.1 fc	19.4 fc	1.6:1	1.3:1	0.8:1
Toilet 107	+	21.7 fc	28.4 fc	15.5 fc	1.8:1	1.4:1	0.8:1
Toilet 115F	+	23.0 fc	28.2 fc	18.4 fc	1.5:1	1.3:1	0.8:1
Waiting Area 101	+	28.6 fc	43.3 fc	17.8 fc	2.4:1	1.6:1	0.7:1

VISUAL

FIRST FLOOR

Designer
O. OKROKOTO
Date
10/19/2018
Scale
Not to Scale
Drawing No.

Summary

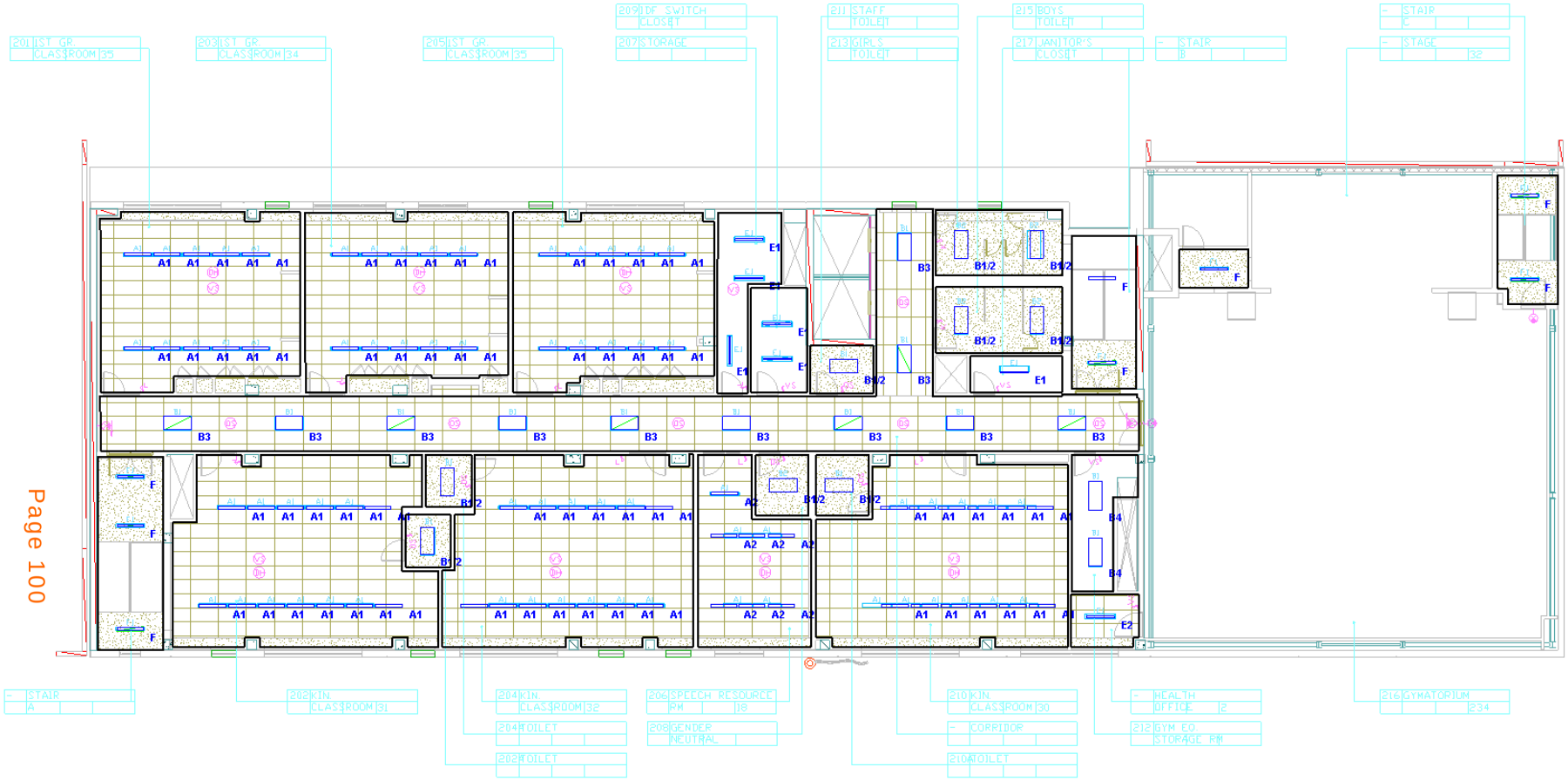

Page 100

Luminaire Schedule

Symbol	Label	Quantity	Manufacturer	Catalog Number	Description	Lamp	Number Lamps	Filename	Lumens Per Lamp	Light Loss Factor	Wattage
	A1	68	Peerless Lighting	BRM9L 4FT 80CRI 35K ID1600LMF 120 TO30	BRM9L 4FT 80CRI 35K ID1600LMF 120 TO30		1	BRM9L_4FT_80CRI_35K_ID1600LMF_120_TO_30.ies	3350.691	0.9	24.31
	A2	7	Peerless Lighting	BRM9L 4FT 80CRI 35K ID1500LMF 120 D100	BRM9L 4FT 80CRI 35K ID1500LMF 120 D100		1	BRM9L_4FT_80CRI_35K_ID1500LMF_120_D_100.ies	4656.286	0.9	49.15
	B1/2	9	Lithonia Lighting	2VFL4 4OL ADPT EZ1 LP835	2x4 VFL 4000 NOMINAL LUMENS, 3500K	LED	1	2VFL4_40L_ADPT_EZ1_LP835.ies	3672.597	0.9	33.15
	B3	11	Lithonia Lighting	2VFL4 4BL ADPT EZ1 LP835	2x4 VFL 4800 NOMINAL LUMENS, 3500K	LED	1	2VFL4_48L_ADPT_EZ1_LP835.ies	4839.787	0.9	39.1
	B4	2	Lithonia Lighting	2VFL4 72L LP835	VFL, 7200 Lumens, 3500k	LED	1	2VFL4_72L_LP835.ies	7194.74	0.9	58.65
	E1	6	Lithonia Lighting	ZL1N L48 3000LM FST MVOLT 35K 80 CRI	ZL1N 48" 3,000 Lumens Frosted Diffuser MVOLT 3,500 K 80CRI	LED	1	ZL1N_L48_3000LM_FST_MVOLT_35K_80_CRI.ies	3224.519	0.9	25.15
	E2	1	Lithonia Lighting	ZL1N L48 7000LM FST MVOLT 35K 80 CRI	ZL1N 48" 7,000 Lumens Frosted Diffuser MVOLT 3,500 K 80CRI	LED	1	ZL1N_L48_7000LM_FST_MVOLT_35K_80_CRI.ies	6643.002	0.9	52.07
	F	8	Lithonia Lighting	WL4 40L LP835	WL4 4ft 4000 NOMINAL LUMENS 3500 K	LED	1	WL4_40L_LP835.ies	4123.791	0.9	39.48

Statistics

Description	Symbol	Avg	Max	Min	Max/Min	Avg/Min	Avg/Max
1st Grade CR 201	+	42.4 fc	59.8 fc	23.4 fc	2.6:1	1.8:1	0.7:1
1st Grade CR 203	+	41.5 fc	58.0 fc	23.1 fc	2.5:1	1.8:1	0.7:1
1st Grade CR 205	+	41.8 fc	58.0 fc	22.6 fc	2.6:1	1.8:1	0.7:1
Boy's Toilet 215	+	23.5 fc	31.0 fc	18.1 fc	1.7:1	1.3:1	0.8:1
Corridor	+	20.6 fc	29.9 fc	7.0 fc	4.3:1	2.9:1	0.7:1
Gender Neutral 208	+	23.3 fc	28.5 fc	18.8 fc	1.5:1	1.2:1	0.8:1
Grils Toilet 213	+	23.4 fc	30.8 fc	17.4 fc	1.8:1	1.3:1	0.8:1
Gym Equipment Storage	+	35.3 fc	47.1 fc	17.9 fc	2.6:1	2.0:1	0.7:1
Health Office	+	47.6 fc	74.6 fc	28.4 fc	2.6:1	1.7:1	0.6:1
Janitor's Closet 217	+	24.2 fc	36.8 fc	12.2 fc	3.0:1	2.0:1	0.7:1
Kindegarten CR 204	+	41.7 fc	58.7 fc	13.3 fc	4.4:1	3.1:1	0.7:1
Kindegarten CR 210	+	41.8 fc	58.4 fc	12.4 fc	4.7:1	3.4:1	0.7:1
Kindgarten CR 202	+	41.6 fc	59.3 fc	15.7 fc	3.8:1	2.6:1	0.7:1
Speech Resource 206	+	42.0 fc	58.2 fc	20.7 fc	2.8:1	2.0:1	0.7:1
Staff Toilet 211	+	25.0 fc	30.1 fc	19.7 fc	1.5:1	1.3:1	0.8:1
Stair A	+	20.6 fc	31.5 fc	12.1 fc	2.6:1	1.7:1	0.7:1
Stair B	+	16.7 fc	25.1 fc	9.2 fc	2.7:1	1.8:1	0.7:1
Stair C	+	20.1 fc	27.4 fc	13.8 fc	2.0:1	1.5:1	0.7:1
Storage 207	+	31.2 fc	45.9 fc	13.9 fc	3.3:1	2.2:1	0.7:1
Switch Closet 209	+	31.8 fc	46.6 fc	16.5 fc	2.8:1	1.9:1	0.7:1
Toilet 202	+	26.3 fc	30.8 fc	22.8 fc	1.4:1	1.2:1	0.9:1
Toilet 204A	+	26.3 fc	30.8 fc	22.1 fc	1.4:1	1.2:1	0.9:1
Toilet 210A	+	23.3 fc	29.2 fc	17.8 fc	1.6:1	1.3:1	0.8:1
WheelChair Lift	+	14.4 fc	17.3 fc	12.2 fc	1.4:1	1.2:1	0.8:1

VISUAL

SECOND FLOOR

Designer
O. OKROKOTO
Date
6/29/2018
Scale
Not to Scale
Drawing No.

Summary

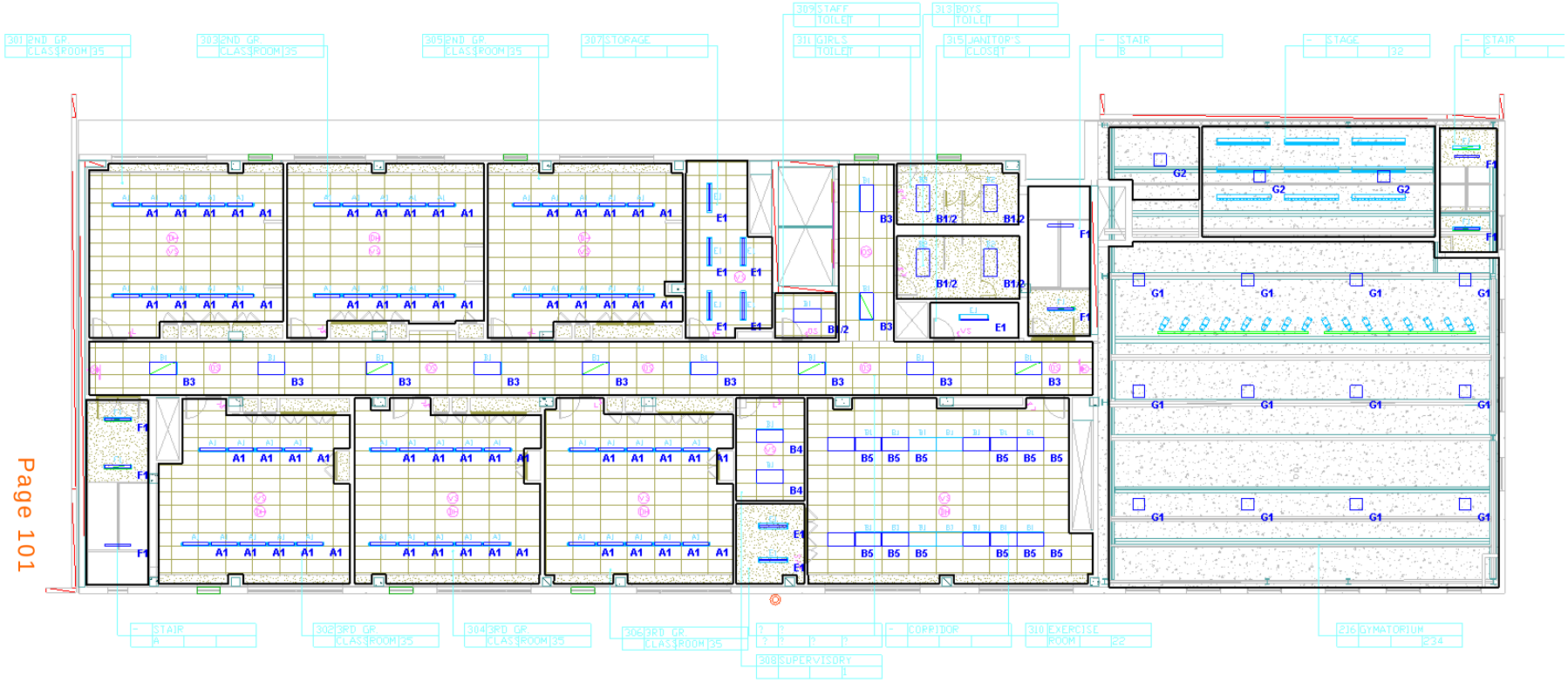

Luminaire Schedule

Symbol	Label	Quantity	Manufacturer	Catalog Number	Description	Lamp	Number Lamps	Filename	Lumens Per Lamp	Light Loss Factor	Wattage
	A1	59	Peerless Lighting	BRM9L 4FT 80CRI 35K ID400LMF 120 70/30	BRM9L 4FT 80CRI 35K ID400LMF 120 70/30		1	BRM9L_4FT_80CRI_35K_ID400LMF_120_70_30.ies	3390.691	0.9	24.31
	B1 / 2	5	Lithonia Lighting	2VTL4 40L LP835	VTLED, 4000 Lumen, 3500K	LED	1	2VTL4_40L_LP835.ies	4394.327	0.9	33.15
	B3	11	Lithonia Lighting	2VTL4 48L ADPTEZ1 LP835	2x4 VTL 4800 NOMINAL LUMENS, 3500K	LED	1	2VTL4_48L_ADPT_EZ1_LP835.ies	4839.787	0.9	39.1
	B4	2	Lithonia Lighting	2VTL4 60L ADPTEZ1 LP835	2x4 VTL 6000 NOMINAL LUMENS, 3500K	LED	1	2VTL4_60L_ADPT_EZ1_LP835.ies	5490.895	0.9	44.2
	B5	12	Lithonia Lighting	2VTL4 30L ADPTEZ1 LP835	2x4 VTL 3000 NOMINAL LUMENS, 3500K	LED	1	2VTL4_30L_ADPT_EZ1_LP835.ies	3318.54	0.9	26.35
	E1	8	Lithonia Lighting	ZL1N L48 3000LM FST MVOLT 35K 80CRI	ZL1N 48" 3,000 Lumens Frosted Diffuser MVOLT 3,500 K 80CRI	LED	1	ZL1N_L48_3000LM_FST_MVOLT_35K_80_CRI.ies	3224.519	0.9	25.15
	F1	7	Lithonia Lighting	WL4 40L LP835	WL4 4ft 4000 NOMINAL LUMENS 3500K	LED	1	WL4_40L_LP835.ies	4123.791	0.9	39.48
	G1	12	Holophane	PHZ 12L 4K 80CRI XX XX XXX W xxxxxx	Phuzion 12,000 Lumens, 4K CCT, 80 CRI, Wide glass	LED	1	PHZ_12L_4K_80CRI_XX_XX_XXX_W_xxxxxx.ies	11884.5	0.9	81.12
	G2	3	Holophane	PHZ 30L 4K 80CRI XX XX XXX W xxxxxx	Phuzion 30,000 Lumens, 4K CCT, 80 CRI, Wide glass	LED	1	PHZ_30L_4K_80CRI_XX_XX_XXX_W_xxxxxx.ies	27723.43	0.9	216.16

Statistics

Description	Symbol	Avg	Max	Min	Max / Min	Avg / Min	Avg / Max
2nd Grade CR 301	+	43.9 fc	59.4 fc	25.4 fc	2.3:1	1.7:1	0.7:1
2nd Grade CR 303	+	43.5 fc	59.2 fc	26.4 fc	2.2:1	1.6:1	0.7:1
2nd Grade CR 305	+	43.7 fc	60.2 fc	25.8 fc	2.3:1	1.7:1	0.7:1
3rd Grade CR 302	+	38.9 fc	53.8 fc	20.2 fc	2.7:1	1.9:1	0.7:1
3rd Grade CR 304	+	44.6 fc	57.0 fc	27.6 fc	2.1:1	1.6:1	0.8:1
3rd Grade CR 306	+	45.2 fc	58.2 fc	30.1 fc	1.9:1	1.5:1	0.8:1
?	+	42.6 fc	59.1 fc	25.7 fc	2.3:1	1.7:1	0.7:1
??	+	27.1 fc	40.3 fc	13.5 fc	3.0:1	2.0:1	0.7:1
Boys Toilet 313	+	27.7 fc	35.9 fc	18.2 fc	2.0:1	1.5:1	0.8:1
Corridor	+	20.6 fc	30.1 fc	7.2 fc	4.2:1	2.9:1	0.7:1
Dimmer Room	+	28.9 fc	32.6 fc	24.8 fc	1.3:1	1.2:1	0.9:1
Exercise Room 310	+	32.1 fc	53.4 fc	12.1 fc	4.4:1	2.7:1	0.6:1
Girls Toilet 311	+	29.6 fc	36.7 fc	22.0 fc	1.7:1	1.3:1	0.8:1
Gymnasium	+	32.3 fc	37.9 fc	21.7 fc	1.7:1	1.5:1	0.9:1
Janitor Closet 315	+	23.8 fc	34.2 fc	13.7 fc	2.5:1	1.7:1	0.7:1
Staff Toilet 309	+	28.9 fc	34.4 fc	24.3 fc	1.4:1	1.2:1	0.8:1
Stage	+	37.0 fc	41.5 fc	28.5 fc	1.5:1	1.3:1	0.9:1
Stair A	+	21.7 fc	30.2 fc	11.2 fc	2.7:1	1.9:1	0.7:1
Stair B	+	16.7 fc	25.0 fc	9.8 fc	2.6:1	1.7:1	0.7:1
Storage 307	+	40.8 fc	57.3 fc	15.2 fc	3.8:1	2.7:1	0.7:1
Toilet B	+	20.7 fc	27.2 fc	15.8 fc	1.7:1	1.3:1	0.8:1

VISUAL

THIRD FLOOR

Designer
O. OKROKOTO
Date
6/29/2018
Scale
Not to Scale
Drawing No.

Summary

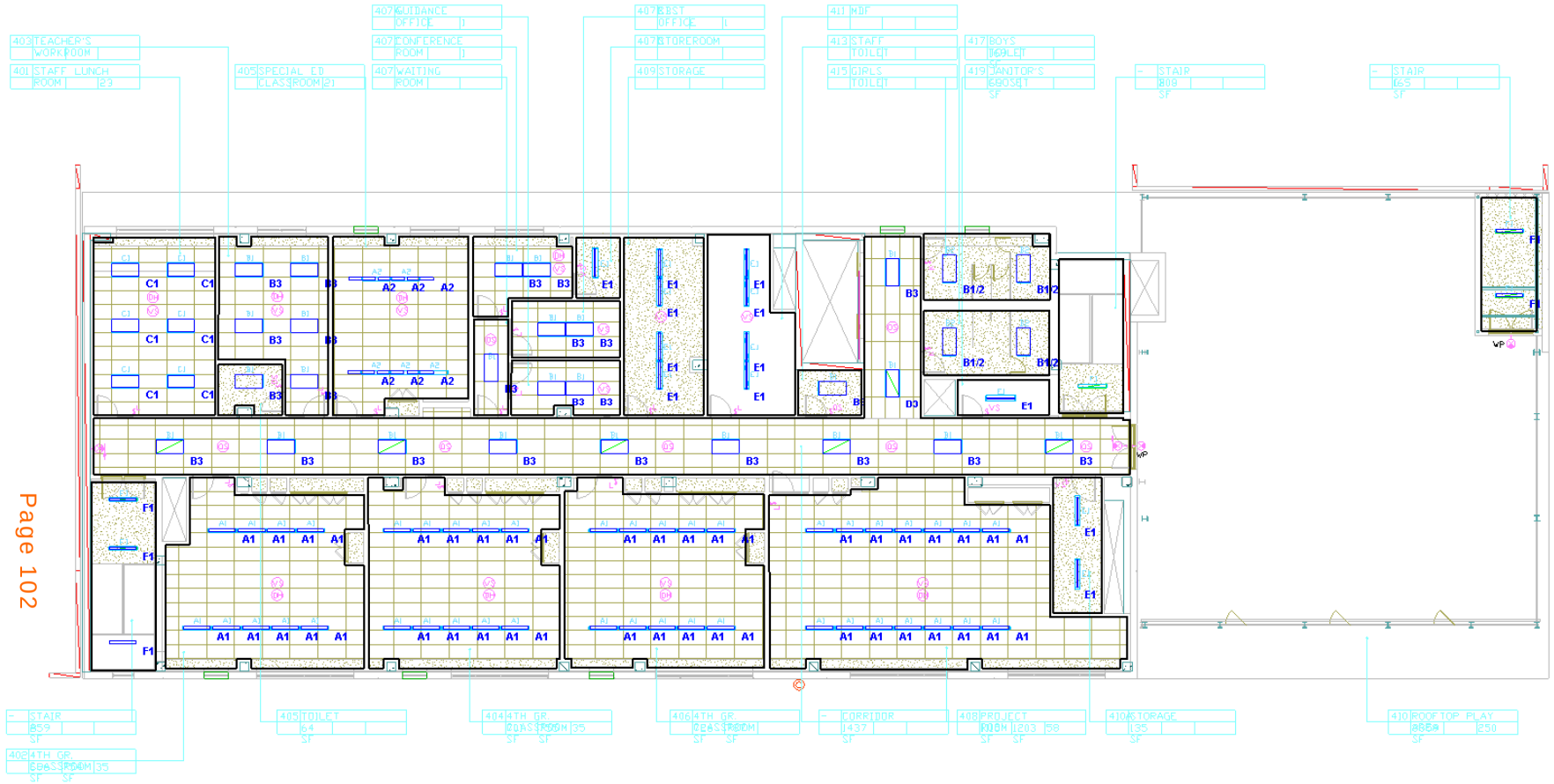

Page 102

VISUAL

FOURTH FLOOR

Designer
O OKROKOTO
Date
6/29/2018
Scale
Not to Scale
Drawing No.

Summary

Luminaire Schedule

Symbol	Label	Quantity	Manufacturer	Catalog Number	Description	Lamp	Number Lamps	Filename	Lumens Per Lamp	Light Loss Factor	Wattage
	A1	43	Peerless Lighting	BRM9L4FT 80CRI 35K ID600LMF 120 70/30	BRM9L 4FT 80CRI 35K ID600LMF 120 70/30		1	BRM9L_4FT_80CRI_35K_ID600LMF_120_70_30.ies	3390.691	0.9	24.31
	A2	6	Peerless Lighting	BRM9L4FT 80CRI 35K ID1500LMF 120 0/100	BRM9L 4FT 80CRI 35K ID1500LMF 120 0/100		1	BRM9L_4FT_80CRI_35K_ID1500LMF_120_0_100.ies	4656.266	0.9	49.15
	B1/2	4	Lithonia Lighting	2VTL4 40L ADPT EZ1 LP835	2x4 VTL 4000 NOMINAL LUMENS, 35 00K	LED	1	2VTL4_40L_ADPT_EZ1_LP835.ies	3672.597	0.9	33.15
	B3	25	Lithonia Lighting	2VTL4 48L ADPT EZ1 LP835	2x4 VTL 4800 NOMINAL LUMENS, 35 00K	LED	1	2VTL4_48L_ADPT_EZ1_LP835.ies	4839.787	0.9	39.1
	C1	6	Lithonia Lighting	2TL4 30L A12 MVOLT EZ1 LP835	2TL4 2X4 30 00 NOMINAL LUMENS, A12 LENS, 3500K	LED	1	2TL4_30L_A12_MVOLT_EZ1_LP835.ies	3075.387	0.9	25
	E1	12	Lithonia Lighting	ZL1N L48 3000LM FST MVOLT 35K 80 CRI	ZL1N 48" 3,000 Lumens Frosted Diffuser MVOLT 3,500 K 80CRI	LED	1	ZL1N_L48_3000LM_FST_MVOLT_35K_80_CRI.ies	3224.519	0.9	25.15
	F1	5	Lithonia Lighting	WL4 40L LP835	WL4 4ft 4000 NOMINAL LUMENS 3500K	LED	1	WL4_40L_LP835.ies	4123.791	0.9	39.48

Statistics

Description	Symbol	Avg	Max	Min	Max/Min	Avg/Min	Avg/Max
4th Grade CR 402	+	38.3 fc	56.0 fc	16.2 fc	3.5:1	2.4:1	0.7:1
4th Grade CR 404	+	42.2 fc	57.4 fc	24.5 fc	2.3:1	1.7:1	0.7:1
4th Grade CR 406	+	41.0 fc	57.2 fc	21.9 fc	2.6:1	1.9:1	0.7:1
Boys Toilet	+	23.6 fc	31.0 fc	17.2 fc	1.8:1	1.4:1	0.8:1
Conference Room 407	+	39.1 fc	61.7 fc	17.6 fc	3.5:1	2.2:1	0.6:1
Corridor	+	20.4 fc	30.4 fc	6.4 fc	4.8:1	3.2:1	0.7:1
Girls Toilet	+	23.7 fc	30.9 fc	17.7 fc	1.7:1	1.3:1	0.8:1
Guidance 407	+	39.6 fc	60.3 fc	22.7 fc	2.7:1	1.7:1	0.7:1
Janitors Closet 419	+	20.6 fc	37.9 fc	8.6 fc	4.4:1	2.4:1	0.5:1
MDF 411	+	31.8 fc	58.7 fc	10.0 fc	5.9:1	3.2:1	0.5:1
Project Room 408	+	40.6 fc	59.7 fc	17.8 fc	3.4:1	2.3:1	0.7:1
SBST Office 407B	+	40.2 fc	59.5 fc	23.8 fc	2.5:1	1.7:1	0.7:1
SPED 405	+	44.5 fc	56.3 fc	32.4 fc	1.7:1	1.4:1	0.8:1
Staff Lunch 401	+	32.1 fc	43.6 fc	15.2 fc	2.9:1	2.1:1	0.7:1
Stair A	+	20.2 fc	31.7 fc	12.0 fc	2.6:1	1.7:1	0.6:1
Stair C	+	20.6 fc	27.5 fc	12.9 fc	2.1:1	1.6:1	0.7:1
Storage 409	+	30.2 fc	57.2 fc	9.9 fc	5.8:1	3.1:1	0.5:1
Storage 410A	+	28.0 fc	40.1 fc	14.6 fc	2.7:1	1.9:1	0.7:1
Store Room 407	+	27.9 fc	38.6 fc	18.2 fc	2.1:1	1.5:1	0.7:1
Teachers Work Room 403	+	46.9 fc	60.2 fc	26.5 fc	2.3:1	1.8:1	0.8:1
Toilet 405	+	28.7 fc	40.1 fc	17.2 fc	2.3:1	1.7:1	0.7:1
Waiting	+	27.8 fc	41.3 fc	16.1 fc	2.6:1	1.7:1	0.7:1

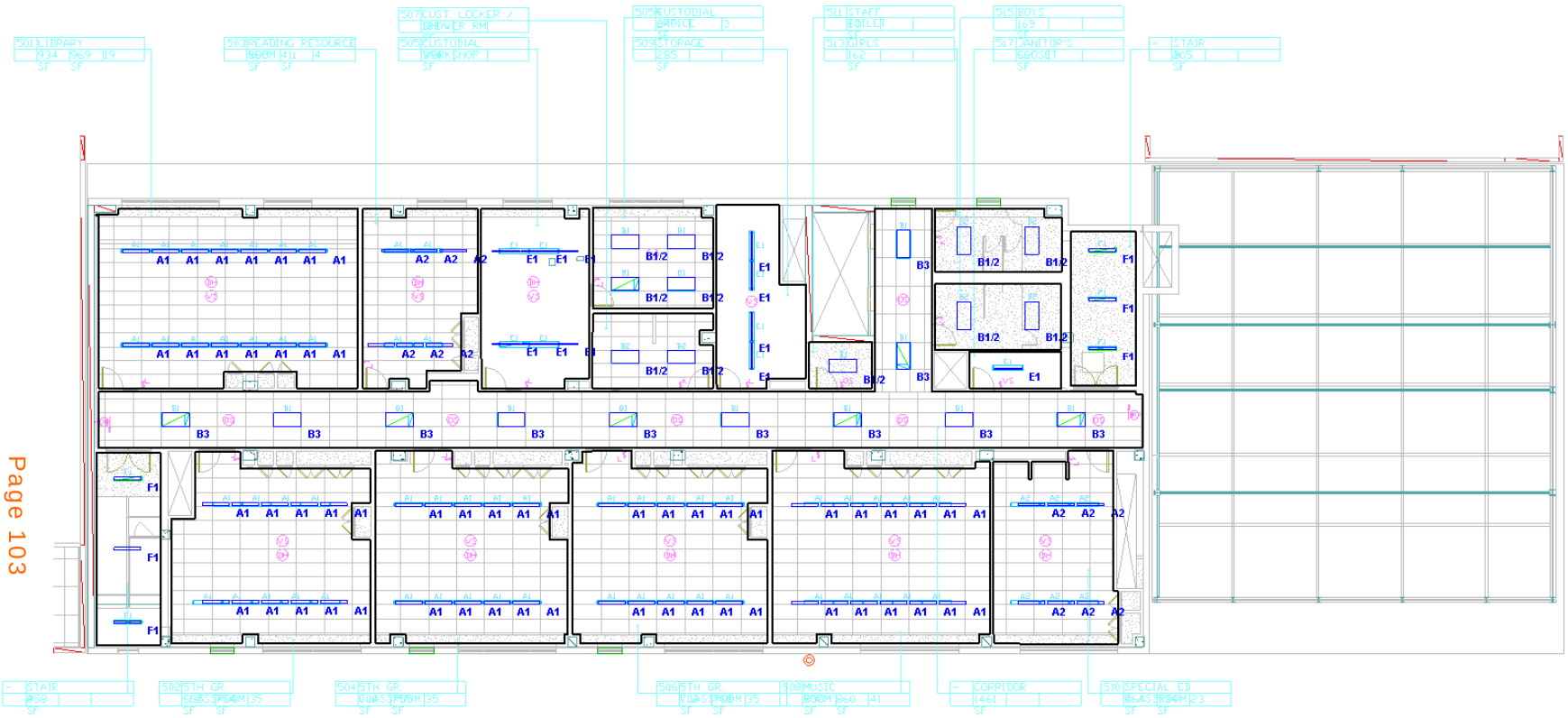

Page 103

Luminaire Schedule

Symbol	Label	Quantity	Manufacturer	Catalog Number	Description	Lamp	Number Lamps	Filename	Lumens Per Lamp	Light Loss Factor	Wattage
	A1	56	Peerless Lighting	BRM4L4FT 8 OCR1 35K ID010 0LMF 120 70/30	BRM4L 4FT 8 OCR1 35K ID010 0LMF 120 70/30		1	BRM4L_4FT_8OCR_35K_ID0100LMF_120_70_30.ies	3 390.691	0.9	24.31
	A2	12	Peerless Lighting	BRM4L4FT 8 OCR1 35K ID1 500LMF 120 0/100	BRM4L 4FT 8 OCR1 35K ID1 500LMF 120 0/100		1	BRM4L_4FT_8OCR_35K_ID1500LMF_120_0_100.ies	4 656.266	0.9	49.15
	B1/2	11	Lithonia Lighting	2VTL4 40L ADPT EZ1 LP835	2x4 VTL 4000 NOMINAL LUMENS, 35.00K	LED	1	2VTL4_40L_ADPT_EZ1_LP835.ies	3 672.597	0.9	33.15
	B3	11	Lithonia Lighting	2VTL4 48L ADPT EZ1 LP835	2x4 VTL 4800 NOMINAL LUMENS, 35.00K	LED	1	2VTL4_48L_ADPT_EZ1_LP835.ies	4 839.787	0.9	39.1
	E1	11	Lithonia Lighting	ZL1N L4 8 3 000LM FST MVOLT 35K 80 CRI	ZL1N 48" 3,000 Lumens Frosted Diffuser MVOLT 3,500 K 80CRI	LED	1	ZL1N_L4 8_3000LM_FST_MVOLT_35K_80_CRI.ies	3 224.519	0.9	25.15
	F1	6	Lithonia Lighting	WL4 40L LP835	WL4 4ft 4000 NOMINAL LUMENS 3 500K	LED	1	WL4_40L_LP835.ies	4 123.791	0.9	39.48

Statistics

Description	Symbol	Avg	Max	Min	Max / Min	Avg / Min	Avg / Max
5th Grade CR 502	+	41.8 fc	57.6 fc	17.0 fc	3.4:1	2.5:1	0.7:1
5th Grade CR 504	+	41.8 fc	57.0 fc	23.6 fc	2.4:1	1.8:1	0.7:1
5th Grade CR 506	+	40.9 fc	56.7 fc	21.7 fc	2.6:1	1.9:1	0.7:1
Boys 515	+	24.1 fc	31.8 fc	17.1 fc	1.9:1	1.4:1	0.8:1
Corridor	+	20.3 fc	29.9 fc	6.5 fc	4.6:1	3.1:1	0.7:1
Custodial Locker 507	+	21.8 fc	28.1 fc	4.9 fc	5.7:1	4.4:1	0.8:1
Custodial Office 505	+	38.4 fc	49.4 fc	22.5 fc	2.2:1	1.7:1	0.8:1
Custodial Work Shop 505	+	36.9 fc	67.3 fc	12.7 fc	5.3:1	2.9:1	0.5:1
Girls 513	+	24.5 fc	32.2 fc	17.7 fc	1.8:1	1.4:1	0.8:1
Janitor 517	+	19.9 fc	36.2 fc	6.3 fc	5.7:1	3.2:1	0.5:1
Library 501	+	39.2 fc	53.7 fc	19.9 fc	2.7:1	2.0:1	0.7:1
Music Room 508	+	43.4 fc	57.9 fc	23.5 fc	2.5:1	1.8:1	0.7:1
Reading Resource 503	+	36.0 fc	49.1 fc	19.6 fc	2.5:1	1.8:1	0.7:1
SPED CR 510	+	44.8 fc	58.2 fc	31.4 fc	1.9:1	1.4:1	0.8:1
Staff Toilet 511	+	24.9 fc	30.1 fc	20.3 fc	1.5:1	1.2:1	0.8:1
Stair A	+	20.2 fc	28.1 fc	14.1 fc	2.0:1	1.4:1	0.7:1
Stair B	+	25.0 fc	34.7 fc	13.2 fc	2.6:1	1.9:1	0.7:1
Storage 509	+	32.6 fc	57.6 fc	12.0 fc	4.8:1	2.7:1	0.6:1

VISUAL

FIFTH FLOOR

Designer
O. OKROKOTO
Date
6/29/2018
Scale
Not to Scale
Drawing No.

Summary

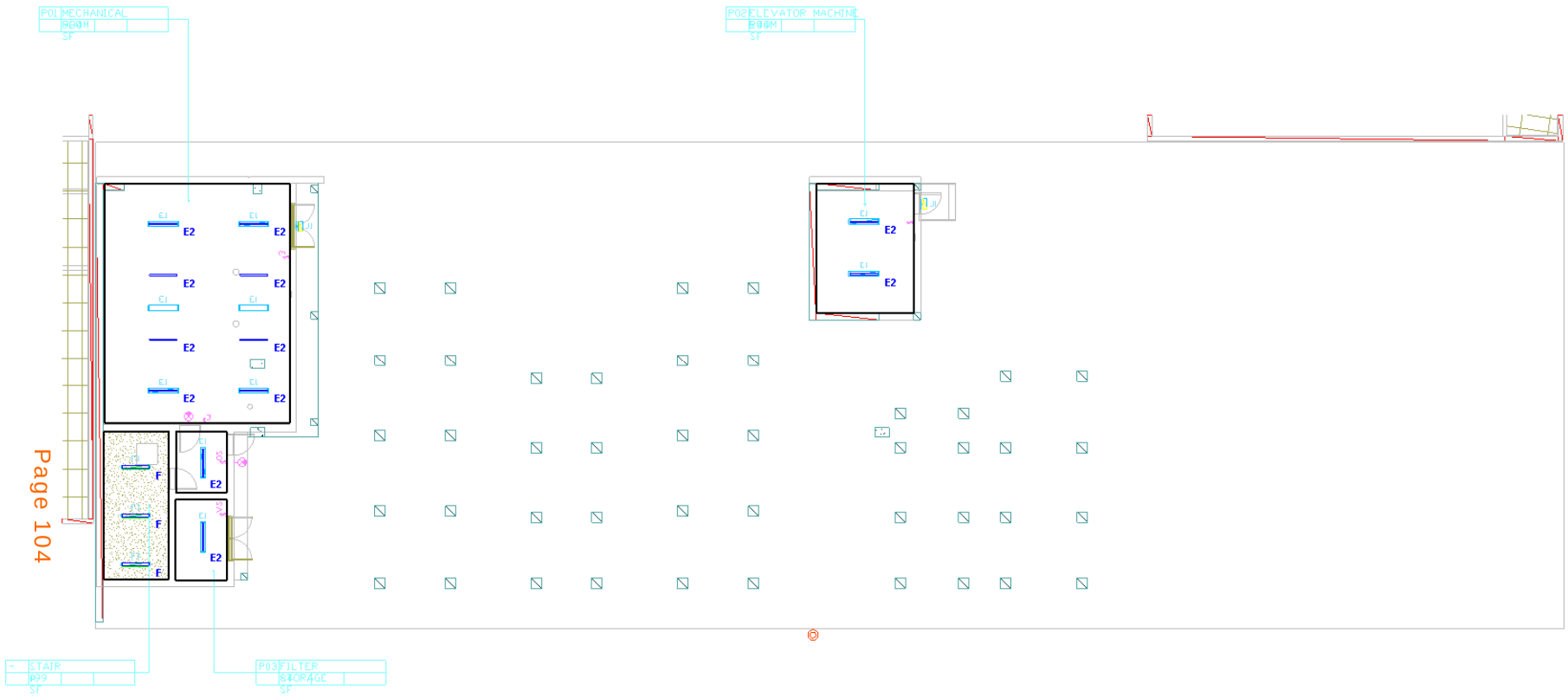

Luminaire Schedule

Symbol	Label	QTY	Manufacturer	Catalog Number	Description	Lamp	Number Lamps	Filename	Lumens per Lamp	LLF	Wattage
	E2	12	Lithonia Lighting	ZL1N L4 0 5 000LM FIST MVOLT 35K 80 CRI	ZL1N 48" 5,000 Lumens Frosted Diffuser MVOLT 3,500 K 80CRI	LED	1	ZL1N_L4 0_5000LM_FIST_MVOLT_35K_80_CRI.ies	4 469.375	0.9	34.31
	F	3	Lithonia Lighting	WL4 40L LP835	WL4 4ft 4000 NOMINAL LUMENS 3500K	LED	1	WL4_40L_LP835.ies	4 123.791	0.9	39.48

Statistics

Description	Symbol	Avg	Max	Min	Max/Min	Avg/Min	Avg/Max
Elevator Machine Room P02	+	39.2 fc	87.1 fc	14.1 fc	6.2:1	2.8:1	0.5:1
Filter Storage P03	+	27.2 fc	48.2 fc	11.8 fc	4.1:1	2.3:1	0.6:1
Mechanical Room P01	+	33.2 fc	59.8 fc	9.9 fc	6.0:1	3.4:1	0.6:1
Stair A	+	25.3 fc	35.4 fc	13.3 fc	2.7:1	1.9:1	0.7:1
Stair Lobby	+	33.9 fc	48.3 fc	22.2 fc	2.2:1	1.5:1	0.7:1

VISUAL

ROOF

Designer
O. OKROKOTO
Date
6/29/2018
Scale
Not to Scale
Drawing No.

Summary

LANGAN

Technical Excellence
Practical Experience
Client Responsiveness

April 20, 2018

Mr. Srinivas Kanaparthi
Industrial Hygienist – C
Industrial & Environmental Hygiene Division
New York City School Construction Authority
30-30 Thomson Avenue
Long Island City, NY 11101

Re: ASHRAE Outdoor Air Assessment
Proposed New Public School Facility (X320)
1560 Boone Avenue, Bronx, NY 10460
NYCSCA LLW #107404
Langan Project No.: 170431015

Dear Mr. Kanaparthi:

At the request of the New York City School Construction Authority (NYCSCA), Langan Engineering, Environmental, Surveying and Landscape Architecture, D.P.C. (Langan) conducted an American Society of Heating, Refrigeration, and Air-Conditioning Engineers (ASHRAE) Outdoor Air Assessment in support of the construction of a new public school (X320), located at 1560 Boone Avenue, Bronx (Block 3014, Portion of Lot 15 – hereafter referred to as the Site). The assessment was conducted in accordance with the ASHRAE Standard 62.1-2016 (Standard) Section 4.0: Outdoor Air Quality. The assessment was conducted to satisfy the New York City Department of Education/NYCSCA Green Schools Guide Credit Q1.1R: Minimum IAQ Performance/Increased Ventilation. The assessment consisted of a qualitative evaluation of regional and local air quality, and did not include air sampling, modeling, or other detailed analysis.

Regional Air Quality Compliance Status

Criteria Air Pollutants are those substances for which a National Ambient Air Quality Standard (NAAQS) has been established, as provided in the Clean Air Act. The following table contains a summary of criteria pollutant information for Bronx County provided by the U.S. Environmental Protection Agency's (USEPA) Green Book Nonattainment Areas for Criteria Pollutants website.

	Regional Outdoor Air Quality Pollutants						
	Particulates ($PM_{2.5}$)	**Particulates (PM10)**	**Carbon Monoxide – 1 hour/8 hours**	**Ozone 8-hour**	**Nitrogen Dioxide**	**Lead**	**Sulfur Dioxide**
Attainment Status	Attainment	Attainment	Attainment	**Non-attainment**	Attainment	Attainment	Attainment

In April 2016, as requested by New York State, USEPA reclassified New York City as a moderate nonattainment area for ozone. Areas classified as moderate nonattainment have 8-hour ozone design value concentrations ranging from 0.086 parts per million (ppm) to 0.100 ppm.

Local Survey

Date and Time of Observation

Visual inspection of the Site and surrounding areas was performed on April 6, 2018 at approximately 10:00 AM by Dina Palazzolo of Langan.

Site Description

The Site consists of an approximately 14,770-square foot portion of Lot 15, located along the western boundary of the Lot. The Site is currently used for staging and parking for an active residential construction site located on the balance of Lot 15. The Site is being developed by the NYCSCA as a new public school facility (X320). At the time of inspection, the temperature was approximately 40° Fahrenheit with rain and overcast skies with winds at about 15 miles per hour (mph) from the southwest. No limiting conditions associated with weather were encountered. The surrounding properties within a 500-foot radius of the perimeter of the Site were surveyed for potential point sources of air emissions

Description of Nearby Facilities

The surrounding area is primarily characterized by residential, commercial, and industrial properties. The Site is bordered to the north, east and south by the remainder of Lot 15, and to the west by Boone Avenue followed by one-story buildings used as auto garages. The balance of Lot 15 is under construction for redevelopment as multi-story residential buildings.

Observation of Odors, Irritants, Visible Plumes or Air Contaminants

No irritants or air contaminants were observed during the survey. Outdoor odors indicative of industrial processes were present at the entrance of A&G Gates Rolling Doors located at 1661 Boone Avenue, Bronx NY (~70 feet north-northwest of the Site) and the Department of Sanitation warehouse located at 1661 West Farms Road (~50 feet northeast of the Site) but the associated odors were not observed at the Site boundary.

Description of Nearby Sources of Vehicle Exhaust

The nearest roadway with heavy traffic flow is Interstate 895, a six-lane interstate approximately 60 feet east of the Site. The remaining roadways in the Site vicinity are used for local traffic (normal to moderate traffic flows consistent with residential and commercial uses).

Description of Nearby Point Sources

Based on a review of USEPA Envirofacts Air Facility System (AFS) database (https://www.epa.gov/enviro/icis-air-search), the following facilities, located within approximately 1,000 feet of the Site, are potential point sources of air emissions:

Site Name	Address	Distance from Site (feet)	Air Program Information	Notes
MNG Automotive Corp.	1563 Boone Avenue Bronx, NY 10460	25	CAASIP[1] (operating)	Minor Emissions
Secure Self Storage	1725 West Farms Road Bronx, NY 10460	300	CAASIP (operating)	Volatile organic compounds - Synthetic Minor Emissions
Evolution Auto Body	1704 Boone Avenue Bronx, NY 10460	465	CAASIP (operating) CAAMACT[2] (operating)	Minor Emissions
Boone Auto Body	1711 Boone Avenue Bronx, NY 10460	575	CAASIP (operating)	Minor Emissions
Champion Paint Manufacturing	1743 West Farms Road Bronx, NY 10460	600	CAASIP (operating)	Minor Emissions

[1]CAASIP = Clean Air Act State Implementation Plan for National Primary and Secondary Ambient Air Quality Standards
[2]CAAMACT = Clean Air Act Maximum Achievable Control Technology Standards (40 CFR Part63)

Discussion and Conclusions

To determine the acceptability of outdoor air, the nearby facilities identified during the assessment were evaluated against the following screening criteria[1]:

1. Large parking facilities or parking garage exhaust vents adjacent to the Site;
2. An atypical (e.g., not at grade) source of vehicular pollutants, such as a highway or bridge, within 200 feet of the Site;
3. A major or large emission source within 1,000 feet of the Site;
4. A medical, chemical, or research lab within 400 feet of the Site;
5. Manufacturing or processing facilities within 400 feet of the Site; and
6. A facility with a New York State Department of Environmental Conservation (NYSDEC) air facility registration within 200 feet the Site.

Based on this evaluation and the findings of the local survey, no facilities were identified with the potential to affect the acceptability of the outdoor air quality at the Site.

Sincerely,
Langan Engineering, Environmental, Surveying and Landscape Architecture, D.P.C.

Gerald F. Nicholls

Gerald F. Nicholls, PE, CHMM
Senior Environmental Scientist

Sincerely,
Langan Engineering, Environmental, Surveying and Landscape Architecture, D.P.C.

Mimi S. Raygorodetsky
Program Manager

cc: Michael Wagner

This page intentionally left blank.

Green Schools Guide - 100% Resubmission
PS 320X: **New Building**
Building ID: 320X, LLW No.: 107404
1570 Boone Avenue, Bronx, NY 10460
March 08, 2018

Supporting Documentations:

Q5.1R - CONTROLLABILITY OF SYSTEMS, LIGHTING
EN002 NYCECC PROGRESS INSPECTIONS

NYCECC PROGRESS INSPECTIONS

	INSPECTION/TEST	REFERENCE STANDARD (SEE NYCECC CHAPTER 4) OR OTHER CRITERIA	ASHRAE CITATION	MIN. PERIODIC INSPECTION FREQUENCY	INSPECTION DESCRIPTION	SUPPORTING DOCUMENTATION LOCATION
IIB2	SHUTOFF DAMPERS	APPROVED CONSTRUCTION DOCUMENTS; AMCA 500D	ASHRAE 90.1 - 6.4.3.4	AS REQUIRED DURING INSTALLATION	STAIR AND ELEVATOR SHAFT VENTS AND DAMPERS FOR OTHER OUTDOOR AIR INTAKES AND EXHAUST OPENINGS INTEGRAL TO THE BUILDING ENVELOPE SHALL BE VISUALLY INSPECTED TO VERIFY THAT SUCH DAMPERS, EXCEPT WHERE PERMITTED TO BE GRAVITY DAMPERS, COMPLY WITH APPROVED CONSTRUCTION DRAWINGS. MANUFACTURER'S LITERATURE SHALL BE REVIEWED TO VERIFY THAT THE PRODUCT HAS BEEN TESTED AND FOUND TO MEET THE STANDARD.	M001.00 AND M501.00
IIB3	HVAC AND SERVICE WATER HEATING EQUIPMENT	APPROVED CONSTRUCTION DOCUMENTS	ASHRAE 90.1 - 6.3, 6.4.1, 6.4.2, 6.8, 7.4, 7.8	PRIOR TO FINAL PLUMBING AND CONSTRUCTION INSPECTION	EQUIPMENT SIZING, EFFICIENCIES AND OTHER PERFORMANCE FACTORS OF ALL MAJOR EQUIPMENT UNITS, AS DETERMINED BY THE APPLICANT OF RECORD, AND NO LESS THAN 15% OF MINOR EQUIPMENT UNITS, SHALL BE VERIFIED BY VISUAL INSPECTION AND, WHERE NECESSARY, REVIEW OF MANUFACTURER'S DATA. POOL HEATERS AND COVERS SHALL BE VERIFIED BY VISUAL INSPECTION.	P001.00
IIB4	HVAC AND SERVICE WATER HEATING SYSTEM CONTROLS CONTROLS WITH SEASONALLY DEPENDENT FUNCTIONALITY	APPROVED CONSTRUCTION DOCUMENTS, INCLUDING CONTROL SYSTEM NARRATIVES; ASHRAE GUIDELINE 1: THE HVAC COMMISSIONING PROCESS	ASHRAE 90.1 - 6.3, 6.4, 6.5, 7.4.4, 7.4.5	AFTER INSTALLATION AND PRIOR TO FINAL ELECTRICAL AND CONSTRUCTION INSPECTION, EXCEPT THAT FOR CONTROLS WITH SEASONALLY DEPENDENT FUNCTIONALITY, SUCH TESTING SHALL BE PERFORMED BEFORE SIGN-OFF FOR ISSUANCE OF A FINAL CERTIFICATE OF OCCUPANCY	NO LESS THAN 20% OF EACH TYPE OF REQUIRED CONTROLS AND ECONOMIZERS SHALL BE VERIFIED BY VISUAL INSPECTION AND TESTED FOR FUNCTIONALITY AND PROPER OPERATION. SUCH CONTROLS SHALL INCLUDE, BUT ARE NOT LIMITED TO, THERMOSTATIC; SET POINT OVERLAP RESTRICTION; OFF-HOUR; SHUTOFF DAMPER; DEMAND CONTROL SYSTEMS; ZONES; ECONOMIZERS; AIR SYSTEMS: VARIABLE AIR VOLUME FAN; SINGLE ZONE COOLING SYSTEMS; HYDRONIC SYSTEMS; HEAT REJECTION EQUIPMENT FAN SPEED; COMPLEX MECHANICAL SYSTEMS SERVING MULTIPLE ZONES; VENTILATION; ENERGY RECOVERY SYSTEMS; HOT GAS BYPASS LIMITATION; TEMPERATURE; SERVICE WATER HEATING; HOT WATER SYSTEM; POOL HEATER AND TIME SWITCHES; EXHAUST HOODS AND RADIANT HEATING SYSTEMS. CONTROLS WHOSE COMPLETE OPERATION CANNOT BE DEMONSTRATED DUE TO PREVAILING WEATHER CONDITIONS TYPICAL OF THE SEASON DURING WHICH PROGRESS INSPECTIONS WILL BE PERFORMED SHALL BE PERMITTED TO BE SIGNED OFF FOR THE PURPOSE OF A TEMPORARY CERTIFICATE OF OCCUPANCY WITH ONLY A VISUAL INSPECTION, PROVIDED, HOWEVER, THAT THE PROGRESS INSPECTOR SHALL PERFORM A SUPPLEMENTAL INSPECTION WHERE THE CONTROLS ARE VISUALLY INSPECTED AND TESTED FOR FUNCTIONALITY AND PROPER OPERATION DURING THE NEXT IMMEDIATE SEASON THEREAFTER.	M404.00 AND M414.00
IIB5	HVAC INSULATION AND SEALING	APPROVED CONSTRUCTION DOCUMENTS; SMACNA DUCT CONSTRUCTION STANDARDS, METAL AND FLEXIBLE	ASHRAE 90.1 - 6.3, 6.4.4; 6.8.2; 6.8.3; 7.4.3, MC 603.9;	AFTER INSTALLATION AND PRIOR TO CLOSING SHAFTS, CEILINGS AND WALLS	INSTALLED DUCT AND PIPING INSULATION SHALL BE VISUALLY INSPECTED TO VERIFY PROPER INSULATION PLACEMENT AND VALUES. JOINTS, LONGITUDINAL AND TRANSVERSE SEAMS AND CONNECTIONS IN DUCTWORK SHALL BE VISUALLY INSPECTED FOR PROPER SEALING.	M001.00
IIB6	DUCT LEAKAGE TESTING	APPROVED CONSTRUCTION DOCUMENTS; SMACNA HVAC AIR DUCT LEAKAGE TEST MANUAL	ASHRAE 90.1 - 6.4.4.2.2	AFTER INSTALLATION AND SEALING AND PRIOR TO CLOSING SHAFTS, CEILINGS AND WALLS	FOR DUCT SYSTEMS DESIGNED TO OPERATE AT STATIC PRESSURES IN EXCESS OF 3 INCHES W.G. (746 PA), REPRESENTATIVE SECTIONS TOTALING AT LEAST 25% OF THE DUCT AREA, PER ECC 403.2.7.1.3, SHALL BE TESTED TO VERIFY THAT ACTUAL AIR LEAKAGE IS BELOW ALLOWABLE AMOUNTS.	M001.00
IIC3	INTERIOR LIGHTING POWER	APPROVED CONSTRUCTION DOCUMENTS	ASHRAE 90.1 - 9.1, 9.2, 9.5, 9.6; 1RCNY §101-07(C)(3)(V)(C)4	PRIOR TO FINAL ELECTRICAL AND CONSTRUCTION INSPECTION	INSTALLED LIGHTING SHALL BE VERIFIED FOR COMPLIANCE WITH THE LIGHTING POWER ALLOWANCE BY VISUAL INSPECTION OF FIXTURES, LAMPS, BALLASTS AND TRANSFORMERS.	EN005.00
IIC4	EXTERIOR LIGHTING POWER	APPROVED CONSTRUCTION DOCUMENTS	ASHRAE 90.1 - 9.4.3; 1RCNY §101-07(C)(3)(V)(C)4	PRIOR TO FINAL ELECTRICAL AND CONSTRUCTION INSPECTION	INSTALLED LIGHTING SHALL BE VERIFIED FOR COMPLIANCE WITH SOURCE EFFICACY AND/OR THE LIGHTING POWER ALLOWANCE BY VISUAL INSPECTION OF FIXTURES, LAMPS, BALLASTS AND RELEVANT TRANSFORMERS.	EN005.00
IIC5	LIGHTING CONTROLS	APPROVED CONSTRUCTION DOCUMENTS, INCLUDING CONTROL SYSTEM NARRATIVES	ASHRAE 90.1 - 9.4.1 (AS MODIFIED BY SECTION ECC A102)	PRIOR TO FINAL ELECTRICAL AND CONSTRUCTION INSPECTION	EACH TYPE OF REQUIRED LIGHTING CONTROLS, INCLUDING MANUAL INTERIOR LIGHTING CONTROLS, LIGHT-REDUCTION CONTROLS, AUTOMATIC LIGHTING SHUT-OFF, DAYLIGHT ZONE CONTROLS AND EXTERIOR LIGHTING CONTROLS, SHALL BE VERIFIED BY VISUAL INSPECTION AND TESTED FOR FUNCTIONALITY AND PROPER OPERATION.	EN101.00 THRU EN107.00
IIC6	ELECTRIC MOTORS (INCLUDING BUT NOT LIMITED TO FAN MOTORS)	APPROVED CONSTRUCTION DOCUMENTS	ASHRAE 90.1 - 9.4.2	PRIOR TO FINAL ELECTRICAL AND CONSTRUCTION INSPECTION	WHERE REQUIRED BY THE CONSTRUCTION DOCUMENTS FOR ENERGY CODE COMPLIANCE, MOTOR LISTING OR LABELS SHALL BE VISUALLY INSPECTED TO VERIFY THAT THEY COMPLY WITH THE RESPECTIVE ENERGY REQUIREMENTS IN THE CONSTRUCTION DOCUMENTS.	M003.00, M004.00 AND M005.00
IID1	MAINTENANCE INFORMATION COMMISSIONING OF MECHANICAL SYSTEMS	APPROVED CONSTRUCTION DOCUMENTS, INCLUDING ELECTRICAL DRAWINGS WHERE APPLICABLE; ASHRAE GUIDELINE 4: PREPARATION OF OPERATING AND MAINTENANCE DOCUMENTA-TION FOR BUILDING SYSTEMS	ASHRAE 90.1 - 4.2.2.3, 6.7.2.2, 8.7.2, 9.7.2.2	PRIOR TO SIGN-OFF FOR ISSUANCE OF FINAL CERTIFICATE OF OCCUPANCY	MAINTENANCE MANUALS FOR MECHANICAL, SERVICE HOT WATER AND ELECTRICAL POWER EQUIPMENT AND SYSTEMS REQUIRING PREVENTIVE MAINTENANCE SHALL BE REVIEWED FOR APPLICABILITY TO INSTALLED EQUIPMENT AND SYSTEMS BEFORE SUCH MANUALS ARE PROVIDED TO THE OWNER. LABELS REQUIRED FOR SUCH EQUIPMENT OR SYSTEMS SHALL BE INSPECTED FOR ACCURACY AND COMPLETENESS.	

LIGHTING FIXTURE SCHEDULE

TYPE	SYMBOL	MOUNTING	DESCRIPTION	LAMP QTY	LAMP TYPE	LAMP WATTAGE
A1		PENDANT 8'-0" A.F.F.	1'X4' DIRECT/INDIRECT LED PENDANT LIGHTING FIXTURE. LOCATIONS: INSTRUCTIONAL SPACES AND LIBRARY	1	LED	24W
B1		RECESSED	2'X4' RECESSED MOUNTED LED VOLUMETRIC TROFFER LIGHTING FIXTURE. LOCATIONS: CORRIDORS, TOILETS, LOCKER ROOMS	1	LED	39W
B2		RECESSED	SAME AS B1 ABOVE, BUT WITH INTEGRAL OCCUPANCY SENSOR LOCATIONS: STUDENT MULTI-USER TOILETS, STUDENT LOCKER ROOMS	1	LED	39W
B3		RECESSED	SAME AS B1 ABOVE, BUT WITH HIGHER LUMEN PACKAGE	1	LED	47W
B4		RECESSED	SAME AS B1 ABOVE, BUT WITH HIGHER LUMEN PACKAGE	1	LED	53W
B5		RECESSED	SAME AS B1 ABOVE, BUT WITH LOWER LUMEN PACKAGE	1	LED	31W
B6		RECESSED	SAME AS B3 ABOVE, BUT WITH INTEGRAL DAYLIGHT SENSOR	1	LED	31W
C1		RECESSED	2'X4' RECESSED MOUNTED LENSED LED LIGHTING FIXTURE. LOCATIONS: CAFETERIA	1	LED	25W
C2		RECESSED	SAME AS C1 ABOVE, BUT WITH HIGHER LUMEN PACKAGE	1	LED	32W
D1		RECESSED	2'X2' RECESSED MOUNTED LENSED VERMIN-PROOF & WET LOCATION PROOF LIGHTING FIXTURE LOCATIONS: KITCHEN	1	LED	45W
E1		PENDANT 8'-0" A.F.F.	2'X4' PENDANT MOUNTED DIRECT LED LIGHTING FIXTURE LOCATIONS: STORAGE AND MECHANICAL ROOMS	1	LED	25W
E2		PENDANT 8'-0" A.F.F.	SAME AS E1 ABOVE, BUT WITH HIGHER LUMEN PACKAGE	1	LED	34W

LIGHTING FIXTURE SCHEDULE

TYPE	SYMBOL	MOUNTING	DESCRIPTION	LAMP QTY	LAMP TYPE	LAMP WATTAGE
F1		SURFACE	2"X4' SURFACE MOUNTED LED LIGHTING FIXTURE WITH INTEGRAL OCCUPANCY SENSOR LOCATIONS: STAIRS	1	LED	40W
G1		PENDANT	SURFACE MOUNTED HIGH BAY LED LIGHT FIXTURE. LOCATIONS: GYMATORIUM	1	LED	61W
G2		PENDANT	SAME AS G1 ABOVE, BUT WITH HIGHER LUMEN PACKAGE	1	LED	170W
H1		SURFACE	2' SECTION BORDER LIGHTS WITH (4) LAMPS IN EACH SECTION WITH ALTERNATING COLORS OF CLEAR, RED, BLUE AND AMBER. LOCATIONS: GYMATORIUM	16	LED	202W
I1		PIPE	ELLIPSOIDAL ZOOM SPOT LIGHTING FIXTURE WITH 25-50 DEGREE ZOOM RANGE AND DIE CAST EXTRUDED ALUMINUM HOUSING. LOCATIONS: GYMATORIUM	1	LED	250W
J1		WALL 15'-0" AFF MAX.	EXTERIOR WALL MOUNTED QUARTER SPHERE LIGHT FIXTURE WITH COLD WEATHER BATTERY	1	LED	20W
L1		RECESSED	LINEAR WALL WASH LED LIGHTING FIXTURE	1	LED	
M1		WALL	RECESSED LINEAR STEP LIGHT LED FIXTURE	1	LED	11W/FT
		WALL	VAPOR TIGHT WALL MOUNTED LIGHT FIXTURE LISTED FOR WET LOCATION	1	LED	15W
		WALL/ CEILING	8" HIGH RED LETTER WITH WHITE BRUSHED ALUMINUM HOUSING & FACE COLOR.	1	LED	5W

LIGHTING CONTROL SYMBOLS

$_{3a}$	SINGLE POLE TOGGLE SWITCH. SUBSCRIPT 'a' INDICATES FIXTURES CONTROLLED. SUBSCRIPT '3' INDICATES THREE WAY SWITCH.
$_{RL}$	SINGLE POLE KEY OPERATED MOTOR RAISE LOWER SWITCH.
$_{3a}^{L}$	LOW VOLTAGE PUSHBUTTON SWITCH. SUBSCRIPT 'a' INDICATES FIXTURES CONTROLLED. SUBSCRIPT '3' INDICATES THREE WAY SWITCH
$_{3a}^{KL}$	WALL MOUNTED LOW VOLTAGE KEY OPERATED SWITCH. SUBSCRIPT 'a' INDICATES FIXTURES CONTROLLED. SUBSCRIPT '3' INDICATES THREE WAY SWITCH.
$_{a}^{VS}$	WALL MOUNTED VACANCY SENSOR SWITCH. SUBSCRIPT 'a' INDICATES FIXTURES CONTROLLED.
$_{a}^{OS}$	WALL MOUNTED OCCUPANCY SENSOR SWITCH. SUBSCRIPT 'a' INDICATES FIXTURES CONTROLLED.
VS $_{a}$	CEILING MOUNTED VACANCY SENSOR. SUBSCRIPT 'a' INDICATED FIXTURES CONTROLLED.
OS $_{a}$	CEILING MOUNTED OCCUPANCY SENSOR. SUBSCRIPT 'a' INDICATED FIXTURES CONTROLLED.
DH $_{a}$	CEILING MOUNTED DAYLIGHT SENSOR. SUBSCRIPT 'a' INDICATED FIXTURES CONTROLLED.
PC $_{a}$	WALL MOUNTED PHOTOCELL. SUBSCRIPT 'a' INDICATED FIXTURES CONTROLLED.

ALL INTERIOR LIGHTING SHALL BE AUTOMATICALLY CONTROLLED BY EITHER A PROGRAMMABLE LIGHTING CONTROL PANEL WITH INTEGRAL CLOCK AND/OR OCCUPANT/VACANCY SENSORS.

DAYLIGHT HARVESTING SENSORS SHALL CONTROL CLASSROOM AND OFFICE LIGHT FIXTURES TO MAINTAIN REQUIRED LIGHTING LEVELS.

SELECT RECEPTACLES SERVING COMPUTER EQUIPMENT SHALL BE CONTROLLED BY THE LIGHTING CONTROL PANEL FOR TIME CLOCK CONTROL.

TO THE BEST OF MY KNOWLEDGE, BELIEF AND PROFESSIONAL JUDGMENT, ALL PLANS AND APPLICATIONS ARE IN COMPLIANCE WITH THE NEW YORK STATE ENERGY CONSERVATION CONSTRUCTION CODE, AS ADOPTED BY NEW YORK CITY.

NAME

SIGNATURE DATE SEAL

Supporting Documentations:

Q5.1R - CONTROLLABILITY OF SYSTEMS, LIGHTING

EN101 CELLAR LIGHTING PLAN (FOR REFERENCE ONLY)

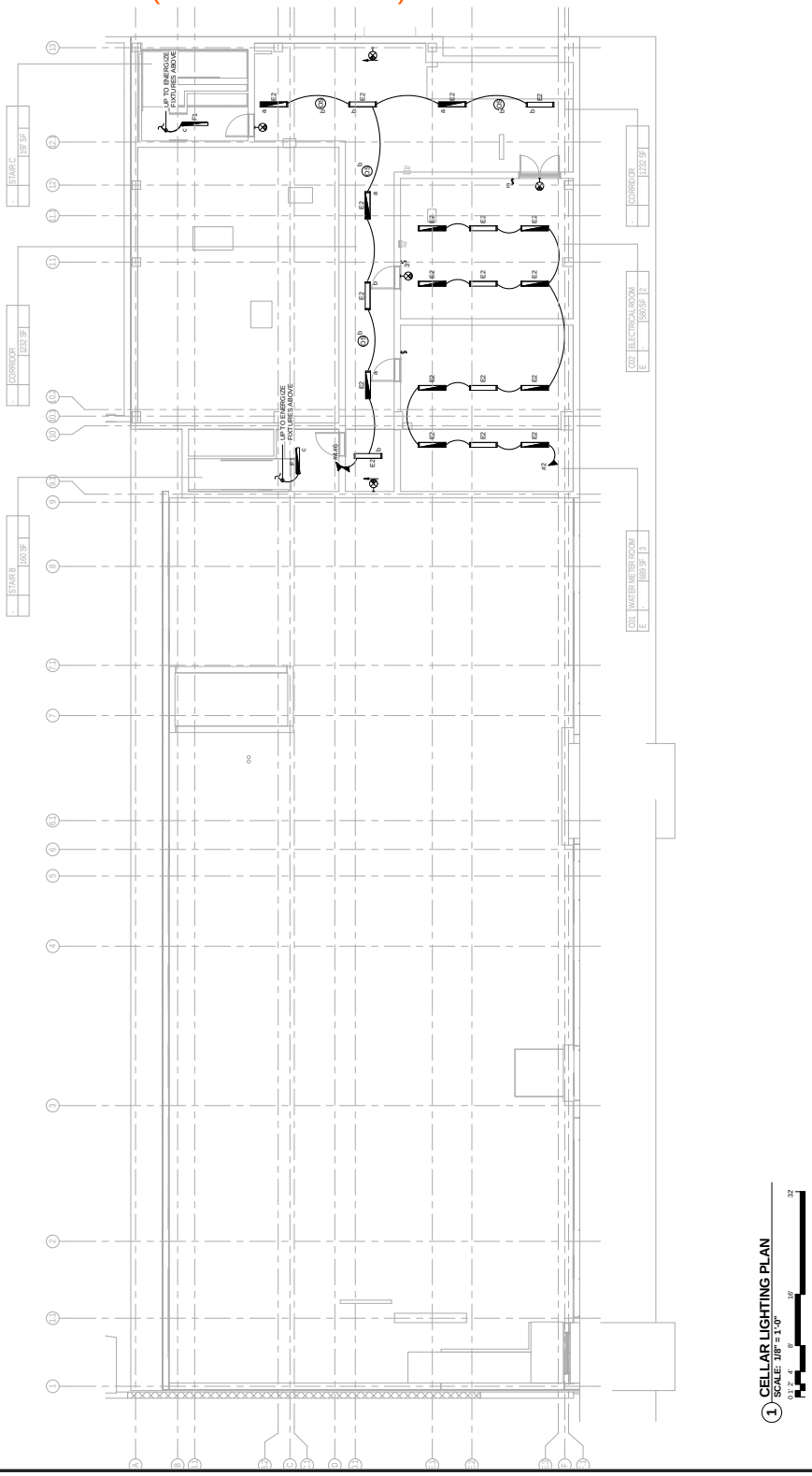

Supporting Documentations:

Q5.1R - CONTROLLABILITY OF SYSTEMS, LIGHTING

EN102 FIRST FLOOR LIGHTING PLAN (FOR REFERENCE ONLY)

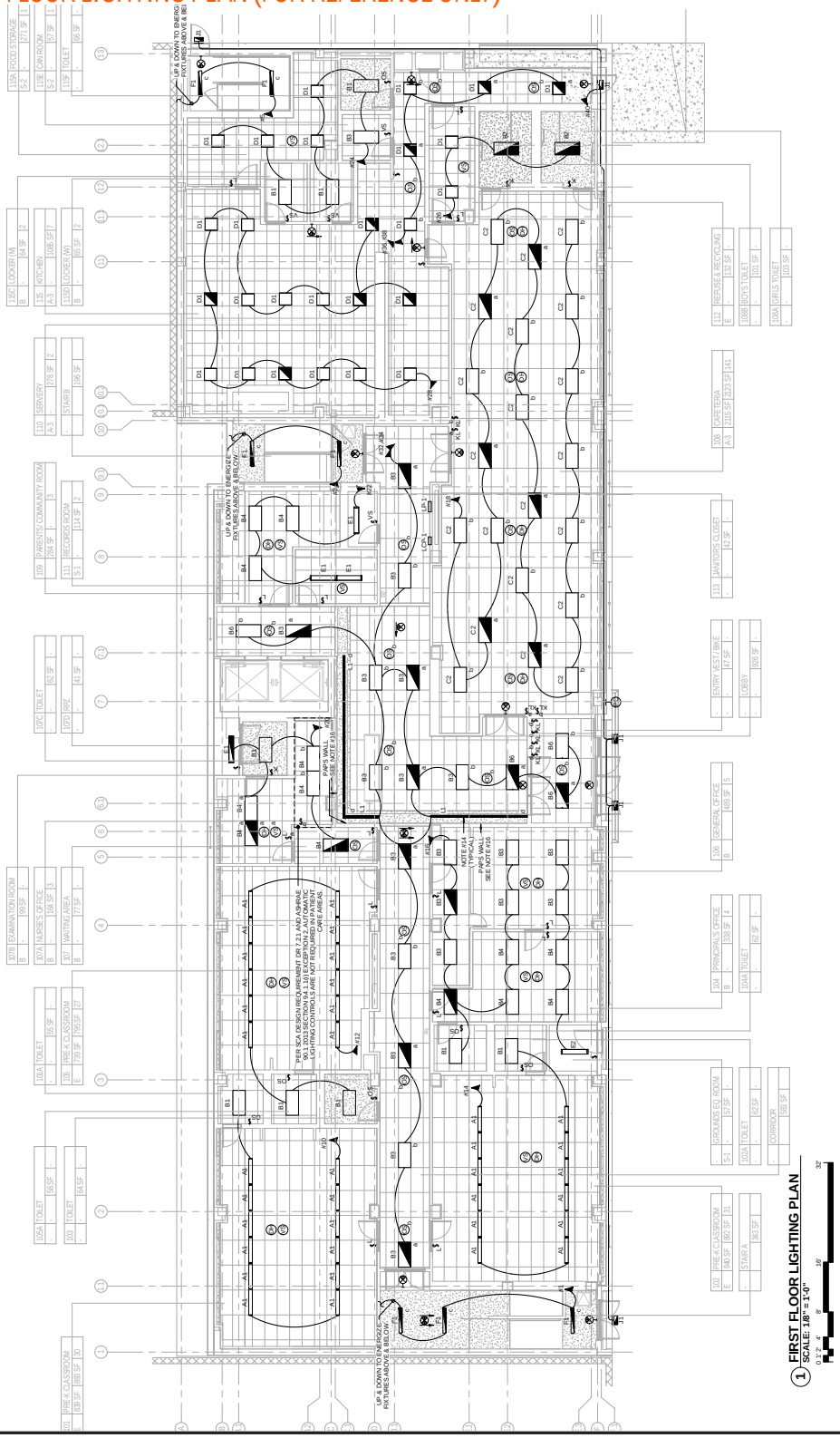

Supporting Documentations:

Q5.1R - CONTROLLABILITY OF SYSTEMS, LIGHTING

EN103 SECOND FLOOR LIGHTING PLAN (FOR REFERENCE ONLY)

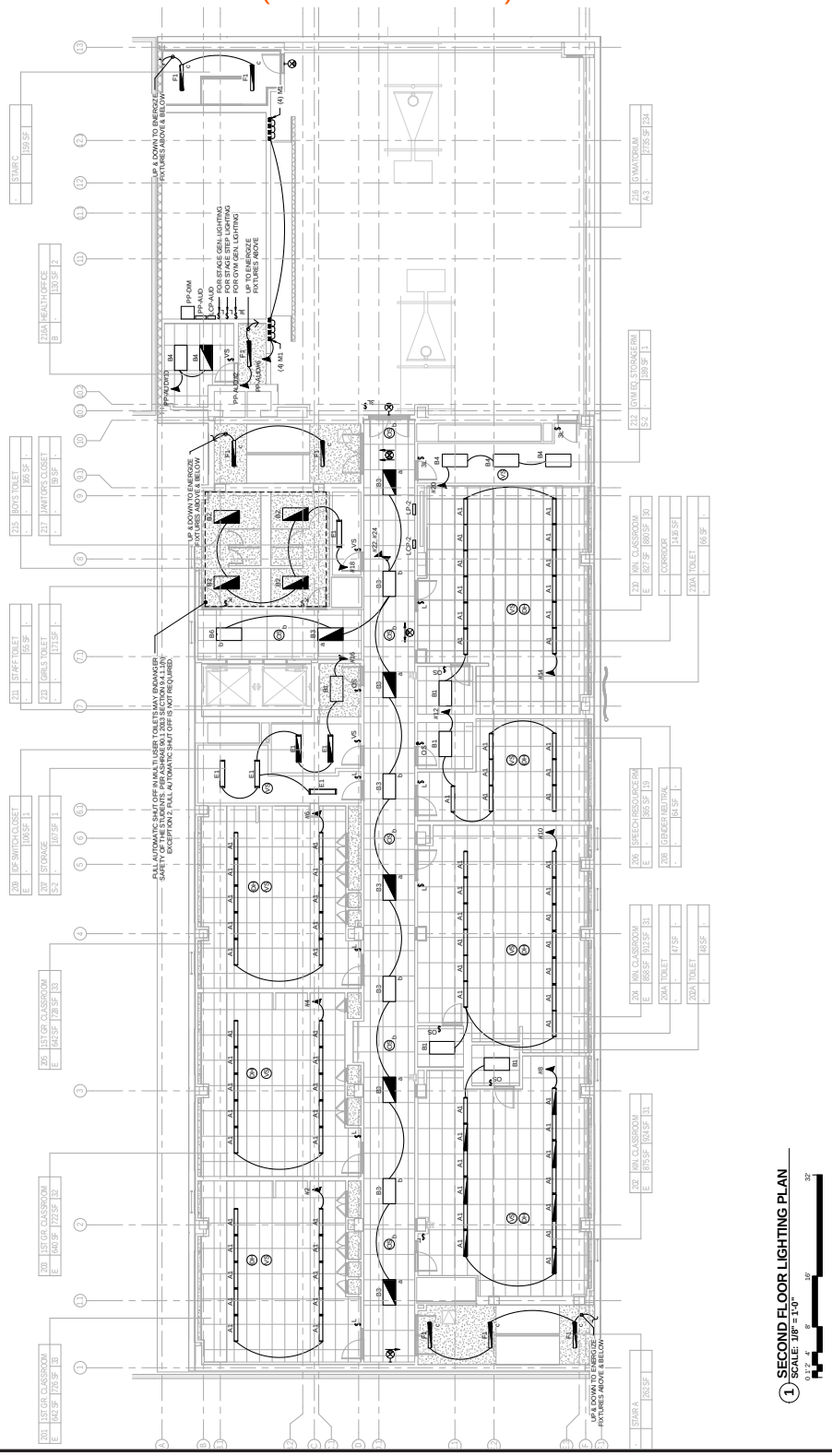

Supporting Documentations:

Q5.1R - CONTROLLABILITY OF SYSTEMS, LIGHTING

EN104 THIRD FLOOR LIGHTING PLAN (FOR REFERENCE ONLY)

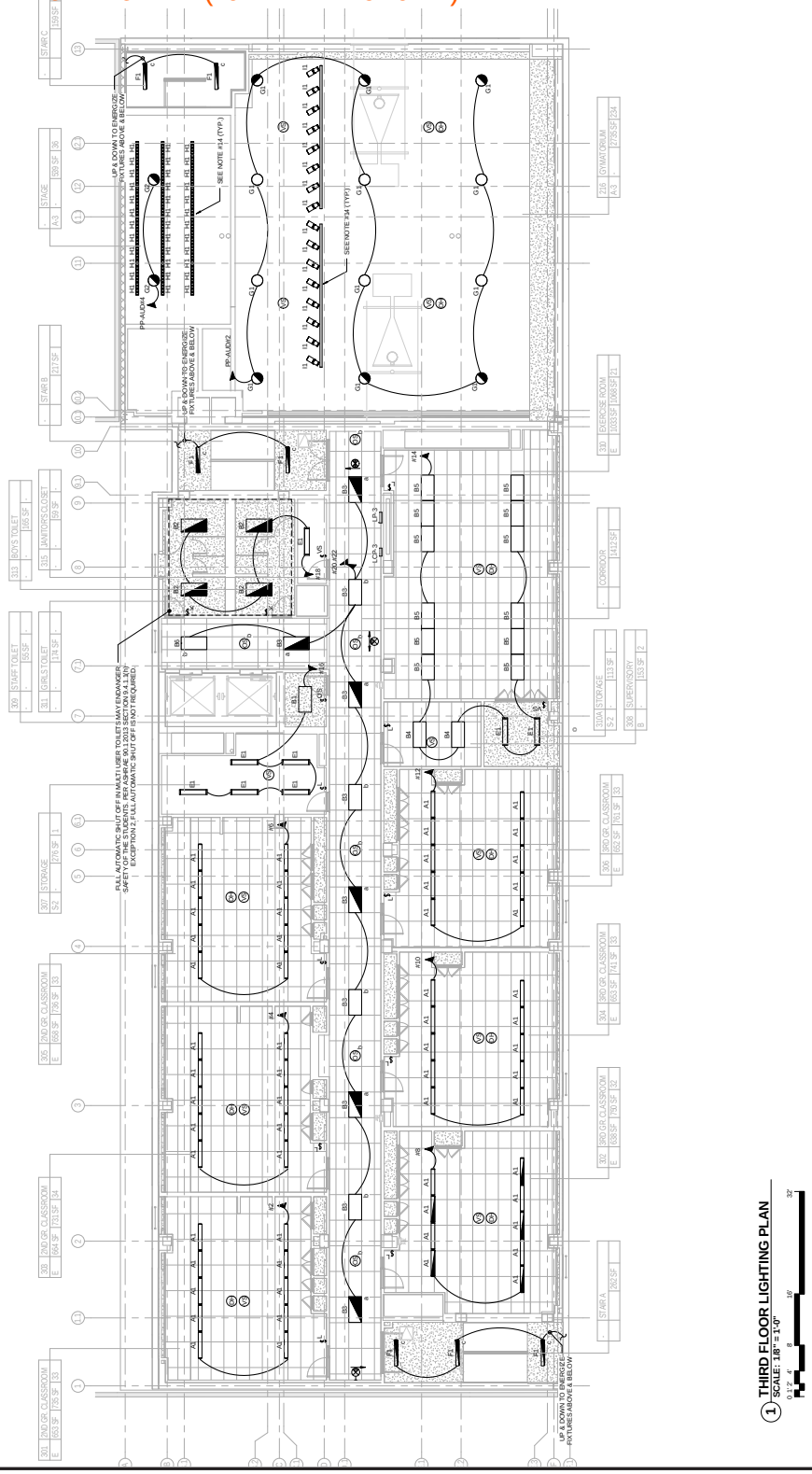

Supporting Documentations:

Q5.1R - CONTROLLABILITY OF SYSTEMS, LIGHTING

EN105 FOURTH FLOOR LIGHTING PLAN (FOR REFERENCE ONLY)

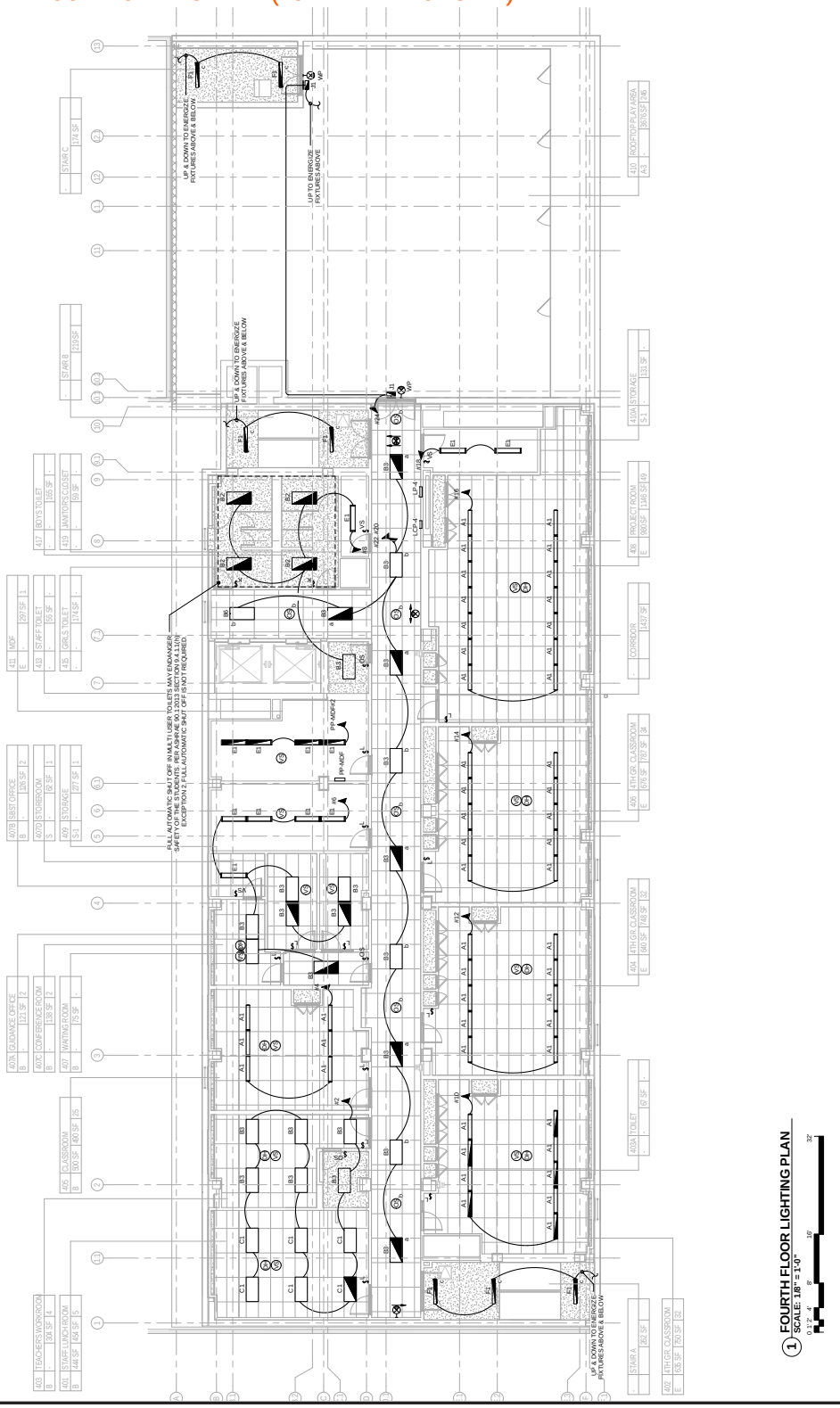

Supporting Documentations:

Q5.1R - CONTROLLABILITY OF SYSTEMS, LIGHTING

EN106 FIFTH FLOOR LIGHTING PLAN (FOR REFERENCE ONLY)

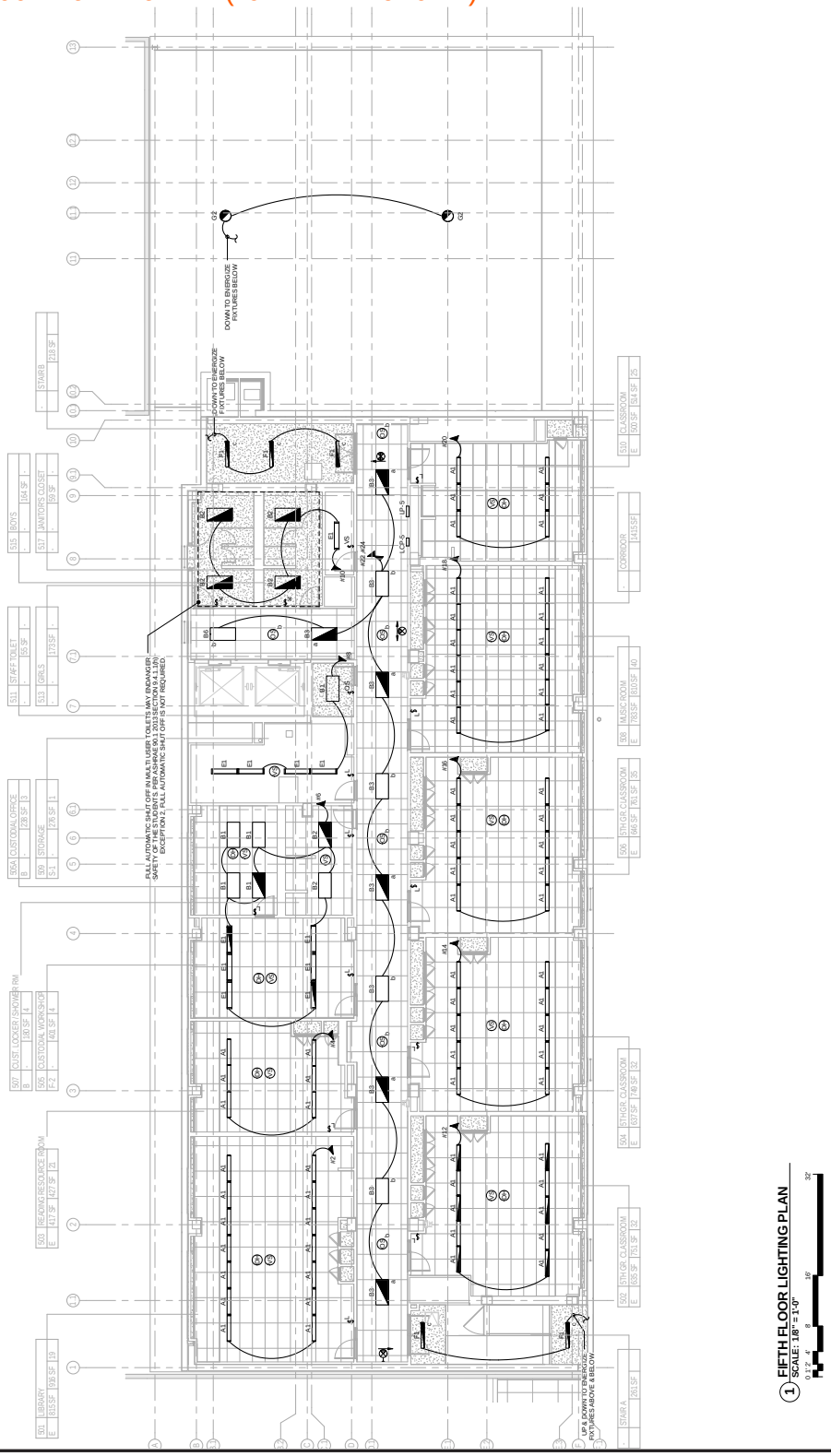

Supporting Documentations:

Q5.1R - CONTROLLABILITY OF SYSTEMS, LIGHTING

EN107 ROOF LIGHTING PLAN (FOR REFERENCE ONLY)

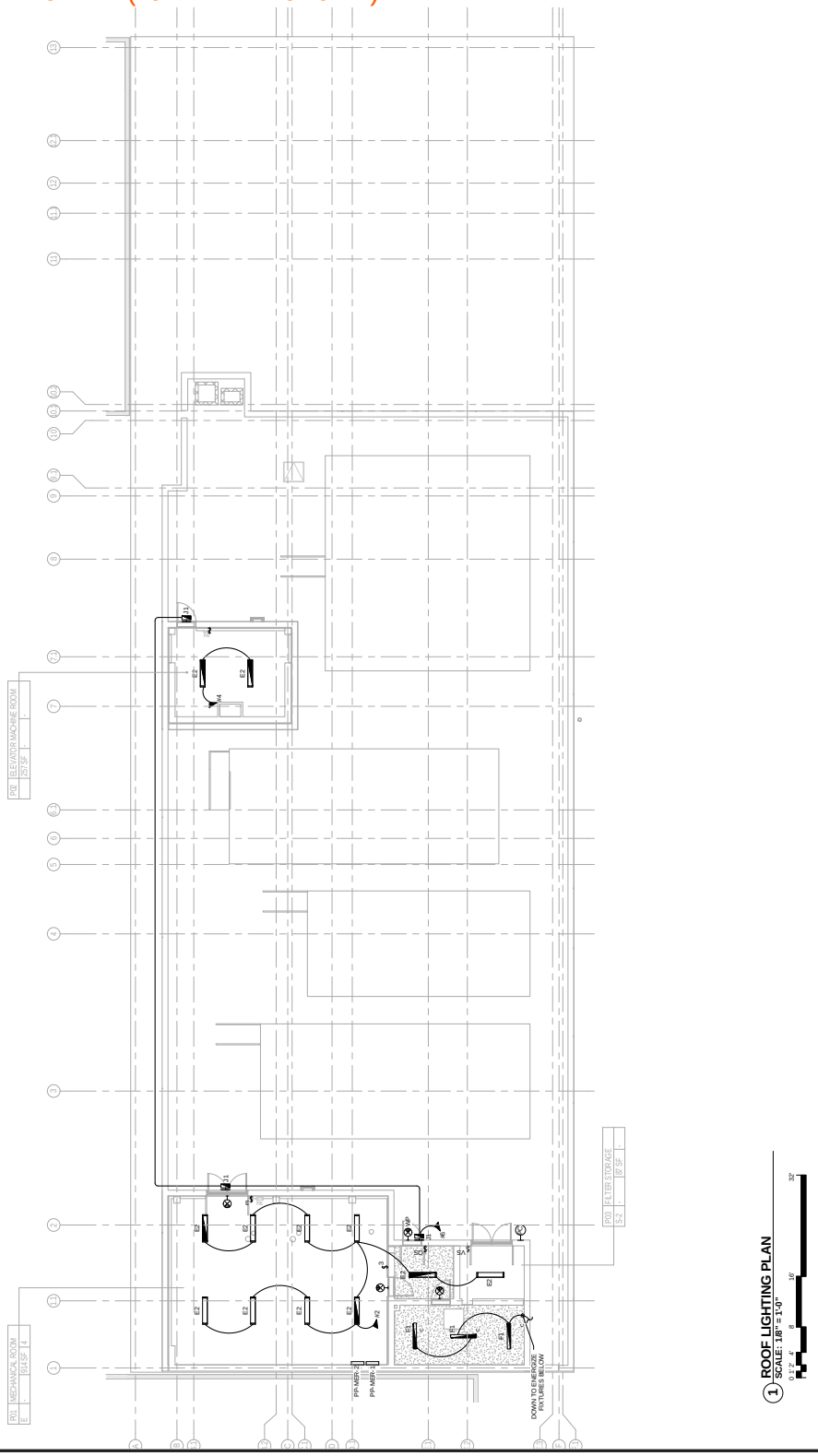

Supporting Documentations:

Q7.4 - Daylight & Views, Views: Plans + Sections

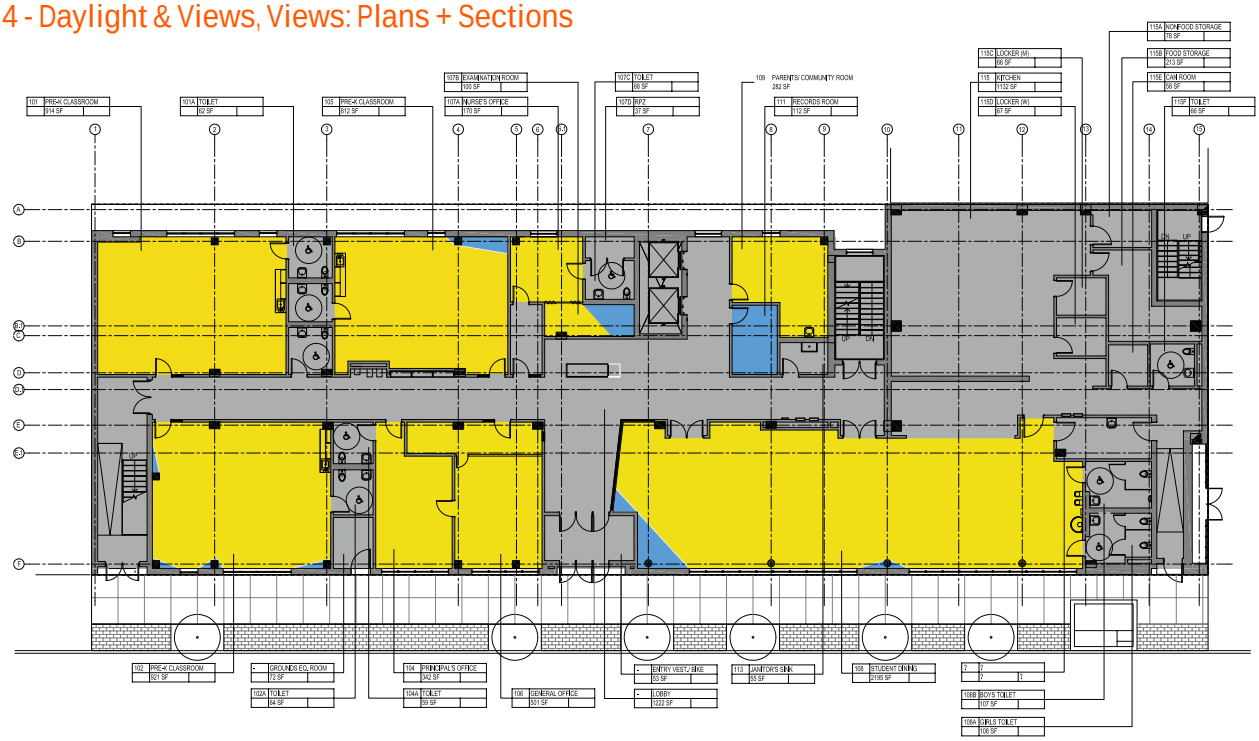

FIRST FLOOR

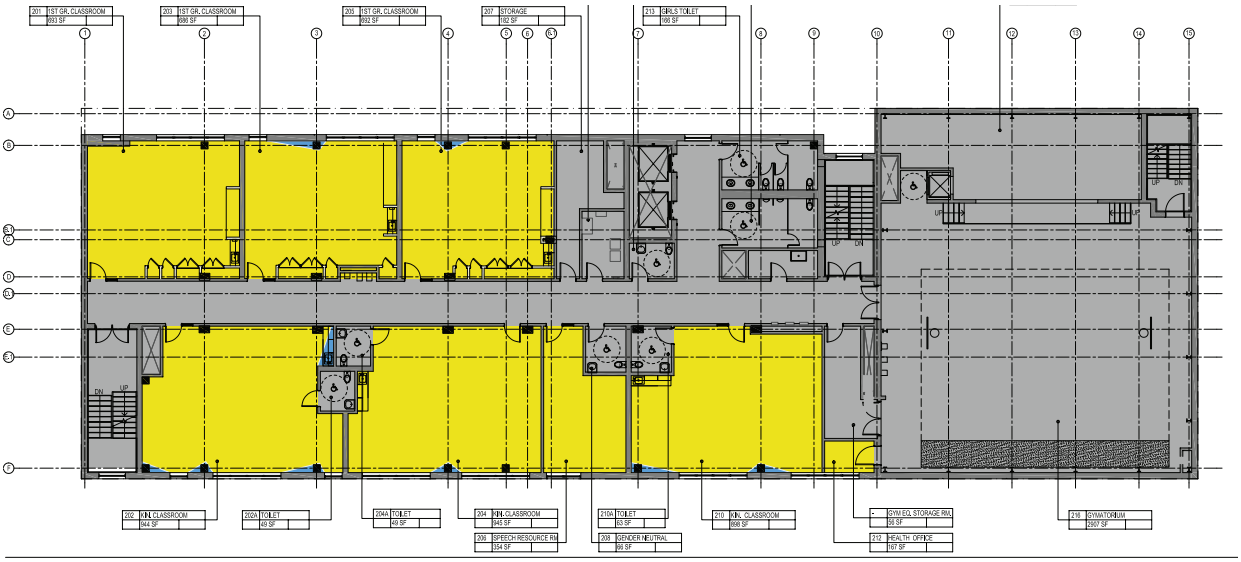

SECOND FLOOR

REGULARY OCCUPIED AREAS WITH VIEWS

REGULARY OCCUPIED AREAS WITHOUT VIEWS

MECHANICAL/ CIRCULATION/ STORAGE

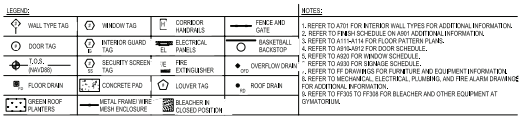

Supporting Documentations:

Q7.4 - Daylight & Views, Views: Plans + Sections

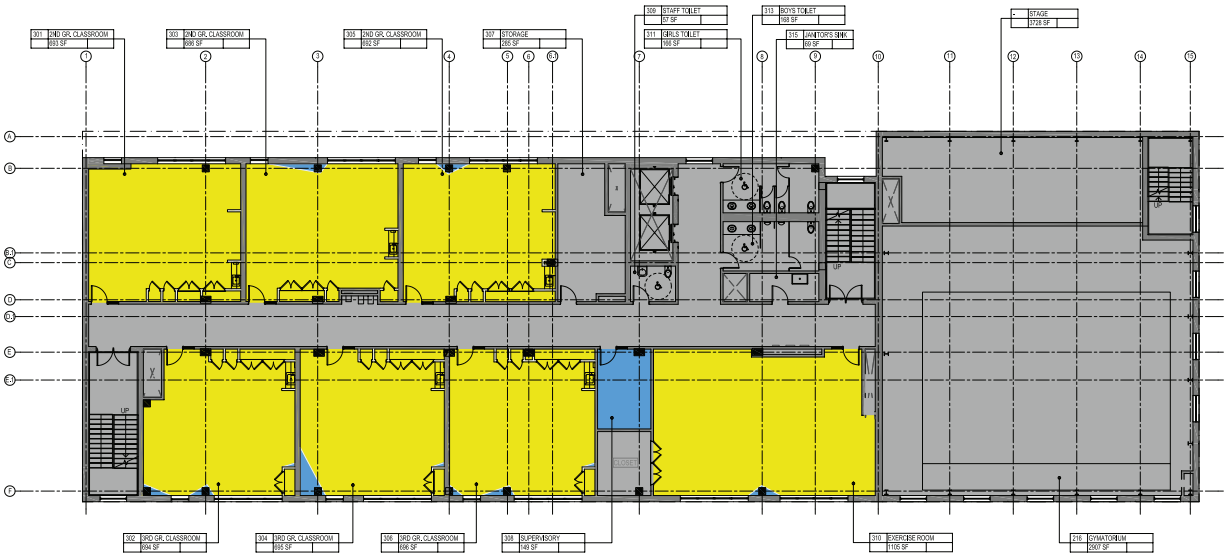

THIRD FLOOR

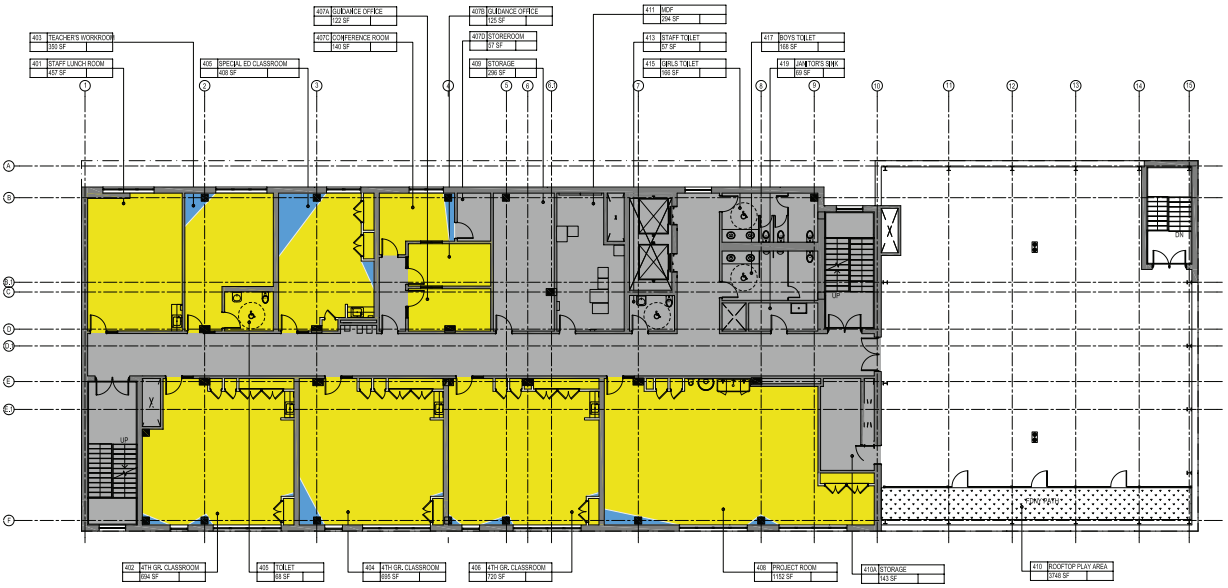

FOURTH FLOOR

REGULARY OCCUPIED AREAS WITH VIEWS

REGULARY OCCUPIED AREAS WITHOUT VIEWS

MECHANICAL/ CIRCULATION/ STORAGE

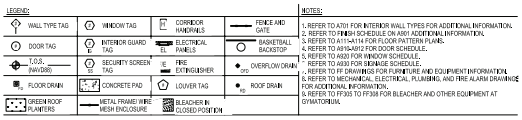

Supporting Documentations:

Q7.4 - Daylight & Views, Views: Plans + Sections

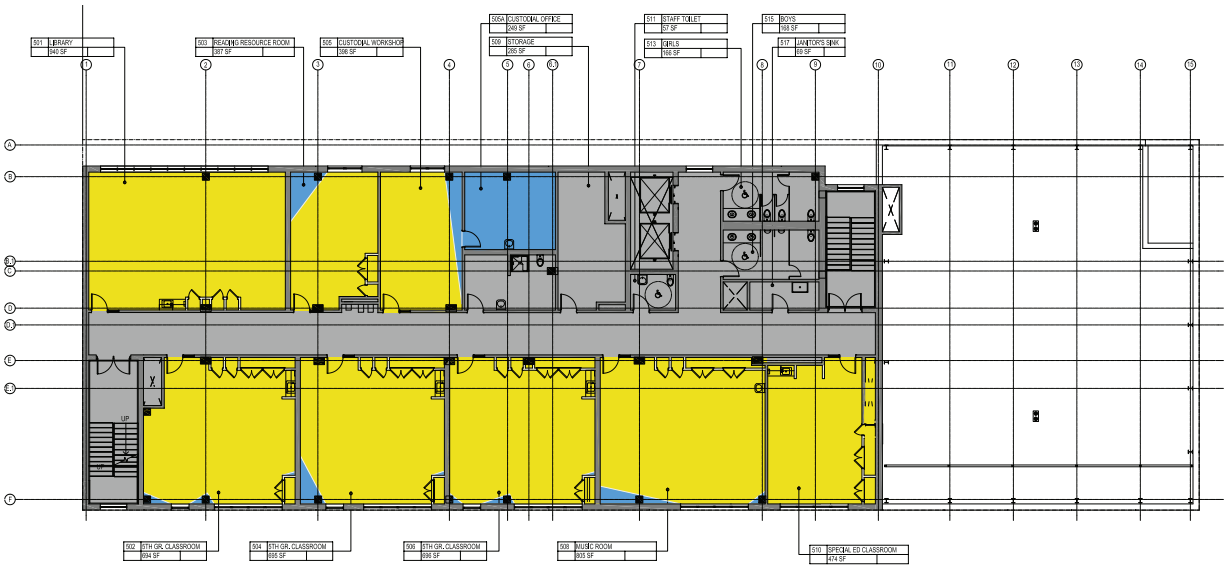

FIFTH FLOOR

REGULARY OCCUPIED AREAS WITH VIEWS

REGULARY OCCUPIED AREAS WITHOUT VIEWS

MECHANICAL/CIRCULATION/ STORAGE

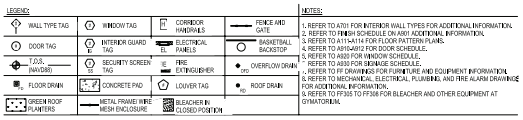

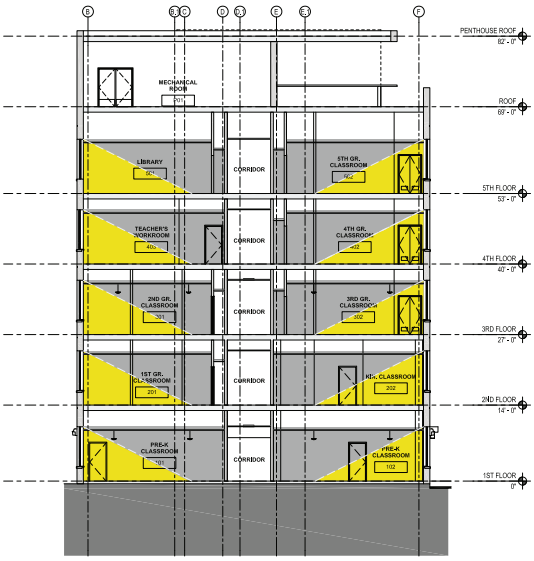

BUILDING SECTION - THROUGH CLASSROOMS

Q7.1, Q7.1, Q7.3 - DAYLIGHT FOR CLASSROOMS AND OTHER SPACES

REGULARLY OCCUPIED AREAS: DAYLIGHTING SECTION

SHADED

This page intentionally left blank.

SCA P.S. 320X
100% DD Review

Prepared For: Diana Rodriguez
di Domenico + Partners LLP
3743 Crescent Street, 3rd Floor
Long Island City, NY 11101

October 16, 2018
Rev. 1 – October 30, 2018
Rev. 2 – November 2, 2018
Rev. 3 – November 26, 2018

404 Fifth Avenue New York NY 10018 212 370 1776 ceramiassociates.com

We have completed our review of the 100% DD documents for the P.S. 320X project. The following report includes our findings, comments, and recommendations based on the requirements outlined in the School Construction Authority (SCA) Design Guidelines and coordination between the SCA and Cerami on past projects.

1.0 ACOUSTIC CRITERIA & TERMINOLOGY

1.1 Background Noise Levels

In describing interior background noise levels, we refer to the Noise Criterion (NC) ratings as established by ASHRAE. The NC ratings are a single-number rating system corresponding to the steady-state background noise level within a space due to building mechanical, plumbing, electrical, and elevator systems.

SCA Design Guidelines Revision 8, Section 6.2.25 outlines the maximum acceptable background noise levels for each room use as shown in Table 1.

Table 1: SCA Background Noise Level Design Goals

Space Type	NC	dBA
Classrooms	35	40
Music Classroom	35	40
Principal's/Private Offices	35	40
Conference Rooms	35	40
Library	40	45
Gymatorium	40	45
General Circulation/Lobby Areas	45	50
Cafeteria	45	50
Toilets	50	55
Storage	50	55
Kitchen	50	55

1.2 Sound Transmission Class (STC)

Sound Transmission Class (STC) is a single number; laboratory tested rating corresponding to the degree of sound separation through a partition, slab, door, etc. A higher STC rating corresponds to greater sound separation.

SCA Design Guidelines Revision 1, Section 1.3.1.9 outlines requirements for sound isolation between instructional spaces and adjacent areas as defined by Table 2.

Table 2: SCA Airborne Sound Isolation Requirements

Adjacent Space	STC Rating
Classroom	50
Corridor	45 (excluding entry doors, which shall achieve STC-35)
Gang Toilets	53
Music Room	60
Mechanical	60
Gym	60
Cafeteria	60

1.3 Impact Insulation Class (IIC)

The Impact Insulation Class (IIC) is a single number rating that defines a floor/ceiling construction's ability to prevent impact noise transmission (i.e. footfall noise). A higher IIC rating corresponds to more impact isolation.

SCA Guidelines Revision 1, Section 1.3.1.9 outlines the requirements for impact isolation between instructional spaces and overhead spaces as defined by Table 3.

Table 3: SCA Floor/Ceiling Impact Isolation Requirements

Adjacent Overhead Space	IIC Rating
Classroom	45
Office	45
Kitchen	50
Cafeteria	50
Gymnatorium	60

1.4 Reverberation Time

Reverberation time is a measure of how long a sound 'lingers' within a room. A more reverberant room is typically described as 'lively' or 'bright' where a less reverberant room is described as 'dead'.

SCA Design Guidelines Revision 1, Section 1.3.1.9 outlines the maximum reverberation time for learning spaces by room volume. The reverberation times for unoccupied core learning spaces in the 500, 1,000, and 2,000 Hz octave bands shall not exceed the following:

- 0.6 seconds for room volumes of up to 10,000 cu. ft.
- 0.7 seconds for room volumes of 10,000 to 20,000 cu. ft.

For classrooms, use of an acoustical ceiling tile with a minimum NRC rating of 0.70 will achieve these goals in most instances.

For other spaces, we recommend the following maximum reverberation times based on room use and room volume:

- Cafeteria: 1.0 seconds
- Gymatorium: 1.5 seconds

SCA standards require an NRC-0.90 ACT tile be provided for the Cafeteria. Within the Gymatorium, a combination of an acoustically absorptive ceiling and wall finishes will be required to achieve the target reverberation time. Please see Section 4.0 for further discussion and recommendations in regard to interior finishes.

1.5 NYC Noise Code

NYC Noise Code Section 24-227 (a) and (b) states that a single piece of mechanical equipment cannot generate sound levels in excess of 42dBA within 3 feet of an open window at an adjacent residence. For multiple pieces of mechanical equipment, the sound level within 3 feet of an open window cannot exceed 45dBA.

NYC Noise Code Section 24-232 lists the octave band limits that cannot be exceeded within residential property as shown in Table 4.

Table 4: NYC Noise Code Maximum Sound Pressure Levels (dB)

Occupancy	Octave Band Center Frequency (Hz)								
	31.5	63	125	250	500	1k	2k	4k	8k
Residential	70	61	53	46	40	36	34	33	32
Commercial	74	64	56	50	45	41	39	38	37

We note that the future school building will be directly adjacent to and surrounded by future residential towers ranging between 9 to 15 stories in height. Careful consideration towards noise control of rooftop mechanical equipment will need to be taken to ensure NYC Noise Code compliancy at these future residences.

2.0 Partitions

Table 5 presents recommended partition revisions as required to meet both SCA/GSG standards and Cerami recommendations:

Table 5: Partition Type Revisions

Room Adjacency		Current Partition		Revised Partition Type	
		Type	Construction	Type	Construction
Classroom 202	Classroom 204	Type 3	2+2 single row stud	Type 2	2+2 staggered stud
Music Room 508	Classroom 506	Type 2	2+2 staggered stud	Type 4*	2+2 independent stud rows
	Classroom 510	Type 1	2+1 single row stud	Type 4*	2+2 independent stud rows

* No rigid connections/bracing between independent stud tracks. Maintain minimum 1" airspace between stud tracks

3.0 Doors

3.1 Classrooms

Based on SCA Guidelines, Classroom doors are required to meet an STC-35 construction. We recommend that all Classroom entry doors consist of either solid wood or insulated metal construction. It is our understanding that SCA Design Requirements do not require, nor is it typical of SCA projects, to include acoustic door seals for typical Classrooms.

3.2 Music Room

We recommend that Music Room entry doors consist of either solid wood or insulated metal construction and include fully perimeter seals and automatic drop bottom seals. Seals at the head and

jamb should be as or similar to Zero International Type 770. Automatic drop bottom seals should be as or similar to Zero International Type 360.

4.0 Interior Finishes

4.1 Gymatorium

Current Gymatorium finishes include an exposed structure ceiling, vinyl sheet athletic flooring, removable wall pads, acoustic wall panels, wood paneling and gypsum board. Based on reviewed finish elevations showing surface area of acoustic wall panel coverage, we calculate the Gymatorium reverberation time to be 2.4 seconds. SCA/GSG requires that the Gymatrorium reverberation time does not exceed 1.5 seconds.

To meet the target reverberation time requirement, we recommend attaching tectum panels directly to the underside of the structure above, changing the current wood panel type to be acoustic wood panels achieving a minimum NRC-0.70 as or similar to Decoustics Type Quadrillo, and increase acoustic panel surface area to a minimum 850sq. ft.

4.2 Classrooms

Reviewed RCPs show typical Classrooms with ACT ceilings, as or similar to Armstrong Ultima, achieving an NRC-0.70/CAC-35; meeting SCA/GSG reverb time requirements for Classrooms sized less than 10,000 cu. ft.

4.3 Music Room

Similar to Classrooms, the Music Room includes an ACT finish ceiling. While not an SCA or GSG requirement, we recommend 2-inch thick fabric wrapped panels, achieving a minimum NRC-0.80 be installed on available surface area starting 3ft above the finish floor on two (2) perpendicular walls to further reduce noise buildup within the room.

4.4 Cafeteria

Reviewed RCPs indicate that the Cafeteria is to be provided with an ACT finish ceiling throughout the space. SCA standards require that the ACT finish ceiling within the Cafeteria be selected to achieve a minimum NRC-0.90 performance rating. This can be achieved by an ACT tile as or similar to Armstrong Optima or Lyra.

5.0 Floor/Ceiling & Critical Adjacencies

5.1 1st Floor Cafeteria

The 1st Floor Cafeteria will be partially located below 2nd Floor Classrooms and therefore requiring a minimum STC rating of 60 to achieve GSG Q8.2 credit. Reviewed structural drawings indicate a 10-inch concrete slab thickness. With an ACT ceiling below (high CAC tiles not required), we expect the Cafeteria floor/ceiling construction to achieve an STC-60 without any further modification to the design.

5.2 2nd Floor Gymatorium

The 2nd Floor Gymatorium will be located directly above the 1st Floor Cafeteria/Kitchen and directly adjacent to a future residential building. We understand that the future residential building will not be connected to the school building. Therefore, structural noise transmission between the Gymatorium and future residential building is not of concern. Please note that this separation is critical for sound separation between buildings and should be maintained.

5.3 Rooftop Play Area

Reviewed floor plans locate a rooftop play area directly above the Gymatorium. Depending on the types and level of anticipated activity to occur within the play area, impact noise transmission to the Gymatorium may be of concern. Understanding that an isolated slab is not feasible for this project at this location, we recommend programming the spaces such that they are not in simultaneous use when there is a quiet program in the Gymatorium.

5.4 5th Floor Music Room

Reviewed floor plans show the 5th Floor Music Room located directly above Project Room408. SCA and GSG design standards require that a minimum STC-60/IIC-60 rating is achieved for this adjacency condition. With the design currently including a 10-inch slab thickness between the Music Room and Classroom below, we recommend achieving the STC-60/IIC-60 performance rating by installing a 6mm acoustic underlayment beneath two (2) layers of ¾-inch thick plywood and vinyl finish flooring throughout the Music Room. We recommend the 6mm underlayment to be as or similar to Pliteq's GenieMat FF06.

6.0 Windows

SCA Design Requirements Section 1.3.1.9 requires that selected exterior windows meet a minimum OITC-28 (STC-35) rating and is typically achieved using the SCA standard window type comprised of two (2) layers of 1/4-inch laminated glass separated by a minimum 3/8-inch airspace.

While the project site is currently within close proximity of the Sheridan Expressway, it is our understanding that the expressway is to be demolished. However, we will still need to collect 24-hour environmental sound level data at the proposed site to determine if upgraded window types would be necessary at any location throughout the building.

7.0 Mechanical

7.1 AHUs

Supply & Return

Reviewed drawings include sound attenuators within supply and return ductwork for all AHUs with minimum dynamic insertion loss performances specified within the schedule. With AHU supply and return ductwork penetrating directly into Classroom space from the rooftop in most instances, we note breakout noise from ductwork to be of primary concern with projected background sound levels exceeding target sound levels by 10-15 NC points within noted Classrooms. To meet target background sound levels, we recommend a double layer gypsum board enclosure with batt insulation in the cavity be constructed around supply/return main ductwork running above the following spaces (minimum 1-inch airspace to be maintained between ductwork and enclosure):

- AHU-1: 5th Grade Classroom 504
- AHU-2: Custodial Office 505A
- AHU-3: Music Room 508
- AHU-4: Special Ed Classroom 510

Radiated

Received manufacturer sound data did not include case radiated sound levels for AHUs. Table 6 presents maximum permissible AHU radiated power levels as required to meet NYC Noise Code criteria at the nearest future residential window.

Table 6: Maximum Permissible AHU Radiated Sound Power Levels (dB re: 1pW)

AHUs	Octave Band Center Frequency (Hz)								L_wA
	63	125	250	500	1000	2000	4000	8000	
Max Radiated L_w	92	84	77	72	68	66	65	63	77

7.2 Chiller

Based on chiller manufacturer sound levels, Arctichill Model PACVMV0300D Ultra Quiet Chiller for 8 modules, we expect the specified chiller to meet NYC Noise Code criteria at the nearest residential lot line window.

7.3 Fans

Reviewed rooftop plans locate KEF-1 and GEF-1 roughly 12ft from the façade of a future residential building with windows located approximately 40ft above the fans. We understand that adjacent property windows will be inoperable. Based on manufacturer fan sound levels, we project these fans to be in compliance with NYC Noise Code.

7.4 VAVs

The reviewed schedule shows all VAVs provided with 3ft sound attenuators achieving insertion losses as or similar to RD-UHV-F9. Submitted sound attenuators and VAV sizing are acceptable in achieving design background sound level criteria.

7.5 Grilles & Diffusers

Scheduled supply diffusers and return grilles have been selected for at least 5NC points lower than the recommended background noise level (Section 1.0). Slotted supply and return have been selected for at least 10NC points lower; acoustically acceptable.

7.6 Air Velocities

Reviewed duct air velocities are within maximum recommended velocities. Any changes to duct sizing should be such that maximum velocity limits in Table 7 are maintained.

Table 7: Maximum Recommended Duct Velocities

Duct Location	NC	Maximum Velocity (fpm)		
		Main Duct	Branch Duct	Run-out Duct
In Shaft or Above Drywall Ceiling	45	2800	2240	1400
	40	2400	1920	1200
	35	2000	1600	1000
	30	1600	1280	800
Above ACT Ceiling	45	2000	1600	1000
	40	1700	1360	850
	35	1400	1120	700
	30	1200	960	600
Exposed Duct	45	1600	1280	800
	40	1400	1120	700
	35	1200	960	600
	30	1000	800	500

7.7 Vibration Isolation

The following recommendations are based on ASHRAE guidelines. All springs should be unhoused and incorporate a neoprene pad or cup. We recommend that floor-mounted springs be Mason Type SLFH or equal; where necessary, Mason Z-1225 seismic snubbers or restrained springs equal to Mason Type SLR should be used. Spring hangers should have a spring in series with neoprene and must allow for up to 30 degrees of misalignment; spring hangers should be Mason 30N or equal.

All connections to vibration isolated equipment should be flexible; this includes electrical service, plumbing/piping, and duct. Where possible, service loops should be provided. Duct connections should be canvas style, high pressure fluid lines should be twin sphere (e.g., Mason SFDEJ) or steel braided with a minimum length of 12-inches.

Table 8: Vibration Isolation Guidelines

Equipment Type	Isolator Type	Static Deflection (inches)
Fans (including AHU)	Spring & Neoprene	2.0
Dry coolers, Air-Cooled Condenser, Air-Cooled Chillers, Air-Cooled Equipment	Spring & Neoprene	2.0
Fan Coil Units/Heat Pumps	Spring & Neoprene	1.0
Hot Water Generators, Boilers (Skid Mounted)	Spring & Neoprene	1.0
Heat Exchangers**	Spring & Neoprene	1.0
Mechanical & Domestic Pumps ≥ 5hp*	Spring & Neoprene	1.0
Mechanical & Domestic Pumps less than 5hp	Double-deflection Neoprene	0.3

* Centrifugal pumps should be mounted on isolated concrete inertia bases, according to Table 9.

** Heat exchangers should be mounted on isolators equal to the equipment/piping that it is connected to.

Table 9: Inertia Base Guidelines

Motor Size (hp)	Minimum Concrete Thickness (inches)
5 to 20	6
21 to 50	8
51 to 75	10
> 75	12

Mechanical piping should be supported on/from vibration isolators for the greater distance of 50 feet or 100 pipe diameters from all isolated equipment and from pressure reducing valves. Piping greater than 2-inches in diameter should utilize spring isolators with a minimum 1-inch static deflection. Piping 2-inches or less in diameter should utilize double-deflection neoprene isolators with a nominal static deflection of 3/8-inch. Where piping is rigidly connected to vibration isolated equipment, the first two connection points should have isolators with static deflections equal to the equipment isolation.

This concludes our comments at this time. Should you have any questions, comments, or concerns please do not hesitate to contact us.

Best Regards,

Nicholas Altanian
Associate

cc: Paul Alber/DDP
Cindy Chan/DDP
Andrew Berger/DDP
Cassey Stypowany/Cerami

Cerami

404 Fifth Avenue New York NY 10018
212 370 1776 ceramiassociates.com

January 9, 2019

Diana Rodriguez
Di Domenico + Partners LLP
3743 Crescent Street
Long Island City, NY 11101

Ref: SCA PS 320X
100% Submission GSG Q8.1, 8.2, & 8.3 Narrative
C&A Project #31966

Dear Diana,

The following letter provides commentary as it relates to the latest reviewed drawing set for the PS 320X project design compliance to GSG Q8.1, 8.2, and 8.3 criteria as based on our review of the Compliance Set, dated December 15, 2018.

Q8.1 Minimum Acoustical Performance

This credit requires:

- Background noise levels at 45dBA based on operation of HVAC, mechanical, plumbing, and electrical systems.
- Classrooms and core learning spaces < 20,000 cubic feet have 100% ceiling area (excluding lights, diffusers, and grilles) finished with a material that has a Noise Reduction Coefficient (NRC) of 0.70 or higher.
- Classrooms and core learning spaces greater than or equal to 20,000 cubic feet are designed to have a reverberation time of 1.5 seconds or less.

Background Noise Level

The project background sound level design criterion for classrooms/core learning spaces is based on the enhanced acoustical performance requirement requiring 40dBA and is addressed in Section 8.2.

Reverberation Time

Classrooms will be provided with ACT, selected to have a minimum NRC-0.70 performance rating, making up the entirety of the finish ceiling to meet GSG core learning space reverberation time requirements.

The reviewed Gymatorium design includes tectum panel ceilings, acoustic wood, and acoustically absorptive fabric wrapped panels. With the reviewed acoustic finishes, we expect the Gymatorium reverberation time to meet the 1.5 second criteria.

Q8.2 Enhanced Acoustic Performance & Sound Isolation for Special Spaces

This credit requires:

- STC of demising constructions as per ANSI S12.60-2002
- STC-35 windows
- STC/IIC-60 at special cases

- Background noise levels at 40 dBA based on operation of HVAC, mechanical, plumbing, and electrical systems.

Demising Constructions
Demising partition constructions are in accordance with ANSI S12.60-2002 requirements.

Special Adjacencies
The following notes special adjacency conditions, as noted by SCA and GSG Q8.2, and corresponding demising constructions designed to meet the required STC/IIC-60 rating.

- *Cafeteria*
  The current design locates the 1st Floor Cafeteria beneath 2nd Floor Classrooms. To meet the required STC-60 rating, an ACT finish ceiling system and 10-inch concrete slab construction will be provided.

- *Music Classroom*
  The current design locates the Music Classroom directly above and horizontally adjacent to Classrooms. STC-60 floor/ceiling and partition constructions are required at these adjacencies. Additionally, an IIC-60 rating is required for the floor/ceiling construction between the Music Classroom and Classroom below.

  The following considerations have been incorporated into the Music Room design to meet the STC/IIC-60 requirements:

  - 10-inch thick slab and vinyl finish flooring installed atop of two (2) layers of ¾-inch thick plywood and 6mm acoustic underlayment
  - Demising classroom partitions consisting of two (2) layers of 5/8-inch gyp board on each side of steel independent stud rows with batt insulation in the stud cavities.

Windows
Exterior glazing units will consist of two (2) lites of ¼-inch laminated glazing separated by a ½-inch airspace. Based on Viracon manufacturer performance data for this glazing type, we expect this to achieve an STC-40 rating; exceeding the minimum required STC-35 rating.

Background Noise Levels
The current design incorporates the following noise control elements, as per our recommendations, to meet the 40dBA background noise level requirement within core learning spaces:

- 3ft sound attenuator for VAVs
- Sound attenuators within supply and return ductwork for AHUs
- Heavy gauge sheetmetal and gypsum board duct enclosures where required to attenuate duct breakout noise
- Supply diffusers and return grilles selected to have NC ratings at least 10 points less than room background NC criteria as based on designed air volume

Cerami

Q8.3 Acoustic Windows

On November 14, 2017, Cerami visited the PS 320X project site at 1570 Boone Avenue in Bronx, NY to take background sound levels measurements at street level along Boone Avenue in an effort to capture exterior sound levels during typical school day rush hour. Based on the highest measured L_{10} value, 67 dBA measured between 4:00PM and 5:00PM, we conclude that the STC-35 windows, as required by Q8.2, will suffice in maintaining interior background sound level requirements. Upgraded window types are not required for this project; credit not applicable.

This concludes our comments at this time. Should you have any questions, comments, or concerns please do not hesitate to contact us.

Best Regards,

Nicholas Altanian
Associate

cc: Paul Alber/di Domenico
Cassey Stypowany/Cerami

MECHANICAL LOAD CALCULATIONS,

AND

MAJOR EQUIPMENT CUT SHEETS

100% DESIGN

SUBMISSION

BUILDING ID: X320

SCHOOL NAME/ BOROUGH: PS 320X/ BRONX

1559-1560 BOONE AVENUE

BRONX, NY

LLW#: 107404

PROJECT TYPE: CAPACITY

Prepared by Lilker Associates

DATE: 09/21/2018

Mechanical load calculations

PROJECT:	PS 320X					
REQUIRED OUTDOOR VENTILATION AIR						
ROOM NUMBER	ROOM NAME	AREA (SQ.FT)	NUMBER OF PEOPLE (NYCBC 2014)	REQUIRED OUTDOOR AIR NYCMC 2014: 403.3		
				O.A./ PERSON	O.A./SQ. FT.	TOTAL O.A.
AHU-1						
201	1ST GRADE CLASSROOM	748	35	10	0.12	440
202	KINDERGARTEN CLASSROOM	939	31	10	0.12	423
203	1ST GRADE CLASSROOM	731	34	10	0.12	428
204	KINDERGARTEN CLASSROOM	930	32	10	0.12	432
-	CORRIDOR 2A	593	0	5	0.06	36
301	2ND GRADE CLASSROOM	748	35	10	0.12	440
302	3RD GRADE CLASSROOM	754	35	10	0.12	440
303	2ND GRADE CLASSROOM	731	35	10	0.12	438
304	3RD GRADE CLASSROOM	755	35	10	0.12	441
306	3RD GRADE CLASSROOM	760	35	10	0.12	441
-	CORRIDOR 3A	475	N/A	N/A	0.06	29
401	STAFF LAUNCH ROOM	456	23	5	0.06	142
402	4TH GRADE CLASSROOM	755	35	10	0.12	441
403	TEACHER'S WORKROOM	351	1	10	0.12	52
404	4TH GRADE CLASSROOM	755	35	10	0.12	441
405	SPECIAL ED CLASSROOM	453	21	10	0.12	264
407	WAITING ROOM	69	1	5	0.06	9
407A	GUIDANCE OFFICE	122	1	5	0.06	12
407B	GUIDANCE OFFICE	125	1	5	0.06	13
407C	CONFERENCE ROOM	139	7	5	0.06	43
407D	STOREROOM	58	0	0	0.12	7
409	STORAGE	294	0	0	0.12	35
-	CORRIDOR 4A	810	0	0	0.06	49
501	LIBRARY	969	19	5	0.12	211
502	5TH GR. CLASSROOM	755	35	10	0.12	441
503	READING RESSOURCE ROOM	411	4	0	0.12	49
504	5TH GRADE CLASSROOM	755	35	10	0.12	441
-	CORRIDOR 5A	810	0	0	0.06	49
					TOTAL	**6482**

PROJECT:	PS 320X					
REQUIRED OUTDOOR VENTILATION AIR						
ROOM NUMBER	ROOM NAME	AREA (SQ.FT)	NUMBER OF PEOPLE (NYCBC 2014)	REQUIRED OUTDOOR AIR NYCMC 2014: 403.3		
				O.A./ PERSON	O.A./SQ .FT.	TOTAL O.A.
AHU-2						
101	PRE-K CLASSROOM	903	30	10	0.18	463
102	PRE-K CLASSROOM	913	31	10	0.18	474
104	PRINCIPAL OFFICE	339	3	5	0.06	35
105	PRE-K CLASSROOM	805	27	10	0.18	415
106	GENERAL OFFICE	495	5	5	0.06	55
107	WAITING	79	1	5	0.06	10
107A	NURSE'S OFFICE	167	3	5	0.06	25
107B	EXAMINATION ROOM	100	0	5	0.06	6
109	PARENTS/COM. ROOM	278	3	5	0.06	32
111	RECORDS ROOM	112	0	0	0.12	13
-	ENTRY VEST. BIKE	47	N/A	N/A	0.06	3
-	LOBBY	640	7	5	0.06	73
205	1ST GRADE CLASSROOM	748	35	10	0.12	440
206	SPEECH RESOURCE ROOM	351	18	10	0.12	222
207	STORAGE	160	0	10	0.12	19
210	KINDERGARTEN CLASSROOM	887	30	10	0.12	406
-	CORRIDOR 2B	1017	N/A	N/A	0.06	61
305	2ND GRADE CLASSROOM	748	35	10	0.12	440
307	STORAGE	282	N/A	N/A	0.12	34
308	SUPERVISOR	152	1	5	0.06	14
310	EXERCICE ROOM	1191	22	20	0.06	511
-	CORRIDOR 3B	930	0	0	0.06	56
406	4TH GRADE CLASSROOM	787	35	10	0.12	444
408	PROJECT ROOM	1203	58	10	0.12	724
410	STORAGE	130	0	0	0.12	16
-	CORRIDOR 4B	930	0	0	0.06	56
505	CUSTODIAL WORKSHOP	397	10	10	0.12	148
505A	CUSTODIAL OFFICE	250	3	5	0.06	30
506	5TH GRADE CLASSROOM	760	35	10	0.12	441
508	MUSIC ROOM	808	41	10	0.12	507
509	STORAGE	281	0	0	0.12	34
510	SPECIAL ED CLASSROOM	534	23	10	0.12	294
-	CORRIDOR 5B	930	0	0	0.06	56
					TOTAL	**6557**

PROJECT:	PS 320X					
REQUIRED OUTDOOR VENTILATION AIR						
ROOM NUMBER	ROOM NAME	AREA (SQ.FT)	NUMBER OF PEOPLE (NYCBC 2014)	REQUIRED OUTDOOR AIR NYCMC 2014: 403.3		
				O.A./ PERSON	O.A./SQ. FT.	TOTAL O.A.
AHU-3						
108	CAFETERIA	2167	146	7.5	0.18	1485
115	KITCHEN	1129	7	7.5	0.12	188
115A	NON FOOD STORAGE	78	0	0	0.12	9
115C	LOCKER ROOM (M)	66	0	0	0	0
115D	LOCKER ROOM (W)	67	0	0	0	0
115E	CAN ROOM	58	0	0	0.12	7
					TOTAL	**1689**

PROJECT:	PS 320X					
REQUIRED OUTDOOR VENTILATION AIR						
ROOM NUMBER	ROOM NAME	AREA (SQ.FT)	NUMBER OF PEOPLE (NYCBC 2014)	REQUIRED OUTDOOR AIR NYCMC 2014: 403.3		
				O.A./ PERSON	O.A./SQ. FT.	TOTAL O.A.
AHU-4						
216	GYMATORIUM	2787	283	5	0.06	1582
216	STAGE	775	32	10	0.06	367
212	GYM EQ. STORAGE ROOM	120	0	0	0.12	14
216A	HEALTH OFFICE	71	2	5	0.06	14
					TOTAL	**1977**

System Checksums

By lilker

NEW AHU-1 | **VAV w/Baseboard Heating**

COOLING COIL PEAK

Peaked at Time: Mo/Hr: 7 / 16
Outside Air: OADB/WB/HR: 87 / 72 / 95

	Space Sens. + Lat. Btu/h	Plenum Sens. + Lat Btu/h	Net Total Btu/h	Percent Of Total (%)
Envelope Loads				
Skylite Solar	0	0	0	0
Skylite Cond	0	0	0	0
Roof Cond	0	8,464	8,464	1
Glass Solar	142,955	0	142,955	18
Glass/Door Cond	18,833	0	18,833	2
Wall Cond	5,088	2,974	8,062	1
Partition/Door	0		0	0
Floor	0		0	0
Adjacent Floor	0	0	0	0
Infiltration	24,541		24,541	3
Sub Total ==>	191,417	11,438	202,855	25
Internal Loads				
Lights	40,082	10,021	50,103	6
People	262,500	0	262,500	33
Misc	90,404	0	90,404	11
Sub Total ==>	392,986	10,021	403,006	50
Ceiling Load	3,966	-3,966	0	0
Ventilation Load	0	0	201,251	25
Adj Air Trans Heat	0		0	0
Dehumid. Ov Sizing			0	0
Ov/Undr Sizing	0		0	0
Exhaust Heat		-6,418	-6,418	-1
Sup. Fan Heat			0	0
Ret. Fan Heat		0	0	0
Duct Heat Pkup		0	0	0
Underflr Sup Ht Pkup			0	0
Supply Air Leakage		0	0	0
Grand Total ==>	588,368	11,075	800,695	100.00

CLG SPACE PEAK

Mo/Hr: 7 / 17
OADB: 86

	Space Sensible Btu/h	Percent Of Total (%)
Envelope Loads		
Skylite Solar	0	0
Skylite Cond	0	0
Roof Cond	0	0
Glass Solar	151,448	34
Glass/Door Cond	17,650	4
Wall Cond	5,450	1
Partition/Door	0	0
Floor	0	0
Adjacent Floor	0	0
Infiltration	9,628	2
Sub Total ==>	184,176	41
Internal Loads		
Lights	40,082	9
People	131,250	29
Misc	90,404	20
Sub Total ==>	261,736	58
Ceiling Load	3,984	1
Ventilation Load	0	0
Adj Air Trans Heat	0	0
Dehumid. Ov Sizing		
Ov/Undr Sizing	0	0
Exhaust Heat		
Sup. Fan Heat		
Ret. Fan Heat		
Duct Heat Pkup		
Underflr Sup Ht Pkup		
Supply Air Leakage		
Grand Total ==>	449,896	100.00

HEATING COIL PEAK

Mo/Hr: Heating Design
OADB: 15

	Space Peak Space Sens Btu/h	Coil Peak Tot Sens Btu/h	Percent Of Total (%)
Envelope Loads			
Skylite Solar	0	0	0.00
Skylite Cond	0	0	0.00
Roof Cond	0	-6,398	1.11
Glass Solar	0	0	0.00
Glass/Door Cond	-93,771	-93,771	16.32
Wall Cond	-8,137	-12,737	2.22
Partition/Door	0	0	0.00
Floor	0	0	0.00
Adjacent Floor	0	0	0
Infiltration	-50,002	-50,002	8.70
Sub Total ==>	-151,910	-162,909	28.35
Internal Loads			
Lights	0	0	0.00
People	0	0	0.00
Misc	0	0	0.00
Sub Total ==>	0	0	0.00
Ceiling Load	-4,030	0	0.00
Ventilation Load	0	-395,159	68.78
Adj Air Trans Heat	0	0	0
Ov/Undr Sizing	0	0	0.00
Exhaust Heat		6,312	-1.10
OA Preheat Diff.		-10,826	1.88
RA Preheat Diff.		-11,969	2.08
Additional Reheat		0	0.00
Underflr Sup Ht Pkup		0	0.00
Supply Air Leakage		0	0.00
Grand Total ==>	-155,941	-574,551	100.00

TEMPERATURES

	Cooling	Heating
SADB	55.0	70.0
Ra Plenum	75.8	69.2
Return	75.8	69.2
Ret/OA	79.4	20.7
Fn MtrTD	0.0	0.0
Fn BldTD	0.0	0.0
Fn Frict	0.0	0.0

AIRFLOWS

	Cooling	Heating
Diffuser	20,180	7,200
Terminal	20,180	7,200
Main Fan	20,180	7,200
Sec Fan	0	0
Nom Vent	6,688	6,445
AHU Vent	6,688	6,445
Infil	816	816
MinStop/Rh	7,200	7,200
Return	20,995	8,016
Exhaust	7,504	7,261
Rm Exh	0	0
Auxiliary	0	0
Leakage Dwn	0	0
Leakage Ups	0	0

ENGINEERING CKS

	Cooling	Heating
% OA	33.1	89.5
cfm/ft²	1.24	0.44
cfm/ton	302.43	
ft²/ton	244.45	
Btu/hr·ft²	49.09	-35.22
No. People	525	

COOLING COIL SELECTION

	Total Capacity ton	Total Capacity MBh	Sens Cap. MBh	Coil Airflow cfm	Enter DB/WB/HR °F	Enter DB/WB/HR °F	Enter DB/WB/HR gr/lb	Leave DB/WB/HR °F	Leave DB/WB/HR °F	Leave DB/WB/HR gr/lb
Main Clg	66.7	800.7	540.6	19,875	79.4	66.8	78.3	55.0	53.8	59.8
Aux Clg	0.0	0.0	0.0	0	0.0	0.0	0.0	0.0	0.0	0.0
Opt Vent	0.0	0.0	0.0	0	0.0	0.0	0.0	0.0	0.0	0.0
Total	66.7	800.7								

AREAS

	Gross Total	Glass ft²	Glass (%)
Floor	16,311		
Part	0		
Int Door	0		
ExFlr	0		
Roof	3,576	0	0
Wall	6,565	2,408	37
Ext Door	0	0	0

HEATING COIL SELECTION

	Capacity MBh	Coil Airflow cfm	Ent °F	Lvg °F
Main Htg	-276.3	0	0.0	0.0
Aux Htg	0.0	0	0.0	0.0
Preheat	-298.2	6,688	15.0	55.0
Reheat	-120.4	7,200	55.0	70.0
Humidif	0.0	0	0.0	0.0
Opt Vent	0.0	0	0.0	0.0
Total	-574.6			

Project Name:
Dataset Name: P3090_AHU_Latest.trc

TRACE® 700 v6.3.3 calculated at 09:30 AM on 06/20/2018
Alternative - 1 System Checksums Report Page 1 of 4

System Checksums

By lilker

NEW AHU-2 | **VAV w/Baseboard Heating**

COOLING COIL PEAK

Peaked at Time: Mo/Hr: 7 / 16
Outside Air: OADB/WB/HR: 87 / 72 / 95

	Space Sens. + Lat. Btu/h	Plenum Sens. + Lat Btu/h	Net Total Btu/h	Percent Of Total (%)
Envelope Loads				
Skylite Solar	0	0	0	0
Skylite Cond	0	0	0	0
Roof Cond	0	4,001	4,001	1
Glass Solar	159,448	0	159,448	20
Glass/Door Cond	19,425	0	19,425	2
Wall Cond	4,369	3,800	8,169	1
Partition/Door	0		0	0
Floor	0		0	0
Adjacent Floor	0	0	0	0
Infiltration	28,656		28,656	4
Sub Total ==>	211,898	7,801	219,700	28
Internal Loads				
Lights	45,680	11,420	57,100	7
People	228,000	0	228,000	29
Misc	94,356	0	94,356	12
Sub Total ==>	368,036	11,420	379,456	48
Ceiling Load	3,871	-3,871	0	0
Ventilation Load	0	0	205,020	26
Adj Air Trans Heat	0		0	0
Dehumid. Ov Sizing			0	0
Ov/Undr Sizing	0		0	0
Exhaust Heat		-5,493	-5,493	-1
Sup. Fan Heat			0	0
Ret. Fan Heat		0	0	0
Duct Heat Pkup		0	0	0
Underflr Sup Ht Pkup			0	0
Supply Air Leakage		0	0	0
Grand Total ==>	583,805	9,857	798,682	100.00

CLG SPACE PEAK

Mo/Hr: 7 / 17
OADB: 86

	Space Sensible Btu/h	Percent Of Total (%)
Envelope Loads		
Skylite Solar	0	0
Skylite Cond	0	0
Roof Cond	0	0
Glass Solar	169,487	37
Glass/Door Cond	18,145	4
Wall Cond	4,774	1
Partition/Door	0	0
Floor	0	0
Adjacent Floor	0	0
Infiltration	10,853	2
Sub Total ==>	203,258	44
Internal Loads		
Lights	45,680	10
People	114,000	25
Misc	94,356	20
Sub Total ==>	254,036	55
Ceiling Load	3,920	1
Ventilation Load	0	0
Adj Air Trans Heat	0	0
Dehumid. Ov Sizing		
Ov/Undr Sizing	0	0
Exhaust Heat		
Sup. Fan Heat		
Ret. Fan Heat		
Duct Heat Pkup		
Underflr Sup Ht Pkup		
Supply Air Leakage		
Grand Total ==>	461,214	100.00

HEATING COIL PEAK

Mo/Hr: Heating Design
OADB: 15

	Space Peak Space Sens Btu/h	Coil Peak Tot Sens Btu/h	Percent Of Total (%)
Envelope Loads			
Skylite Solar	0	0	0.00
Skylite Cond	0	0	0.00
Roof Cond	0	-3,033	0.53
Glass Solar	0	0	0.00
Glass/Door Cond	-96,577	-96,577	16.74
Wall Cond	-6,215	-11,395	1.98
Partition/Door	0	0	0.00
Floor	0	0	0.00
Adjacent Floor	0	0	0
Infiltration	-56,364	-56,364	9.77
Sub Total ==>	-159,156	-167,369	29.02
Internal Loads			
Lights	0	0	0.00
People	0	0	0.00
Misc	0	0	0.00
Sub Total ==>	0	0	0.00
Ceiling Load	-3,227	0	0.00
Ventilation Load	0	-385,059	66.76
Adj Air Trans Heat	0	0	0
Ov/Undr Sizing	0	0	0.00
Exhaust Heat		4,397	-0.76
OA Preheat Diff.		-13,233	2.29
RA Preheat Diff.		-15,526	2.69
Additional Reheat		0	0.00
Underflr Sup Ht Pkup		0	0.00
Supply Air Leakage		0	0.00
Grand Total ==>	-162,383	-576,789	100.00

TEMPERATURES

	Cooling	Heating
SADB	55.0	70.0
Ra Plenum	75.7	69.5
Return	75.7	69.5
Ret/OA	79.2	22.2
Fn MtrTD	0.0	0.0
Fn BldTD	0.0	0.0
Fn Frict	0.0	0.0

AIRFLOWS

	Cooling	Heating
Diffuser	20,687	7,244
Terminal	20,687	7,244
Main Fan	20,687	7,244
Sec Fan	0	0
Nom Vent	6,577	6,280
AHU Vent	6,577	6,280
Infil	919	919
MinStop/Rh	7,244	7,244
Return	21,607	8,164
Exhaust	7,497	7,200
Rm Exh	0	0
Auxiliary	0	0
Leakage Dwn	0	0
Leakage Ups	0	0

ENGINEERING CKS

	Cooling	Heating
% OA	31.8	86.7
cfm/ft²	1.11	0.39
cfm/ton	310.82	
ft²/ton	279.29	
Btu/hr·ft²	42.97	-31.03
No. People	456	

COOLING COIL SELECTION

	Total Capacity ton	Total Capacity MBh	Sens Cap. MBh	Coil Airflow cfm	Enter DB/WB/HR °F	Enter DB/WB/HR °F	Enter DB/WB/HR gr/lb	Leave DB/WB/HR °F	Leave DB/WB/HR °F	Leave DB/WB/HR gr/lb
Main Clg	66.6	798.7	547.9	20,320	79.2	66.4	76.9	55.0	53.7	59.5
Aux Clg	0.0	0.0	0.0	0	0.0	0.0	0.0	0.0	0.0	0.0
Opt Vent	0.0	0.0	0.0	0	0.0	0.0	0.0	0.0	0.0	0.0
Total	66.6	798.7								

AREAS

	Gross Total	Glass ft²	Glass (%)
Floor	18,589		
Part	0		
Int Door	0		
ExFlr	0		
Roof	1,688	0	0
Wall	6,257	2,541	41
Ext Door	0	0	0

HEATING COIL SELECTION

	Capacity MBh	Coil Airflow cfm	Ent °F	Lvg °F
Main Htg	-283.5	0	0.0	0.0
Aux Htg	0.0	0	0.0	0.0
Preheat	-293.3	6,577	15.0	55.0
Reheat	-121.1	7,244	55.0	70.0
Humidif	0.0	0	0.0	0.0
Opt Vent	0.0	0	0.0	0.0
Total	-576.8			

Project Name:
Dataset Name: P3090_AHU_Latest.trc

TRACE® 700 v6.3.3 calculated at 09:30 AM on 06/20/2018
Alternative - 1 System Checksums Report Page 2 of 4

System Checksums

By Iilker

NEW AHU-3 | **Single Zone Variable Air Volume**

COOLING COIL PEAK

Peaked at Time: Mo/Hr: 7 / 16
Outside Air: OADB/WB/HR: 87 / 72 / 95

	Space Sens. + Lat. Btu/h	Plenum Sens. + Lat Btu/h	Net Total Btu/h	Percent Of Total (%)
Envelope Loads				
Skylite Solar	0	0	0	0
Skylite Cond	0	0	0	0
Roof Cond	0	0	0	0
Glass Solar	34,960	0	34,960	14
Glass/Door Cond	2,851	0	2,851	1
Wall Cond	1,153	843	1,996	1
Partition/Door	0		0	0
Floor	0		0	0
Adjacent Floor	0	0	0	0
Infiltration	6,327		6,327	2
Sub Total ==>	45,291	843	46,133	18
Internal Loads				
Lights	9,463	2,366	11,829	5
People	77,500	0	77,500	30
Misc	69,506	0	69,506	27
Sub Total ==>	156,469	2,366	158,835	62
Ceiling Load	427	-427	0	0
Ventilation Load	0	0	53,805	21
Adj Air Trans Heat	0		0	0
Dehumid. Ov Sizing			0	0
Ov/Undr Sizing	0		0	0
Exhaust Heat		-759	-759	0
Sup. Fan Heat			0	0
Ret. Fan Heat		0	0	0
Duct Heat Pkup		0	0	0
Underflr Sup Ht Pkup			0	0
Supply Air Leakage		0	0	0
Grand Total ==>	202,186	2,023	258,014	100.00

CLG SPACE PEAK

Mo/Hr: 7 / 17
OADB: 86

	Space Sensible Btu/h	Percent Of Total (%)
Envelope Loads		
Skylite Solar	0	0
Skylite Cond	0	0
Roof Cond	0	0
Glass Solar	37,795	23
Glass/Door Cond	2,651	2
Wall Cond	1,272	1
Partition/Door	0	0
Floor	0	0
Adjacent Floor	0	0
Infiltration	2,273	1
Sub Total ==>	43,990	27
Internal Loads		
Lights	9,463	6
People	38,750	24
Misc	69,506	43
Sub Total ==>	117,719	73
Ceiling Load	438	0
Ventilation Load	0	0
Adj Air Trans Heat	0	0
Dehumid. Ov Sizing		
Ov/Undr Sizing	0	0
Exhaust Heat		
Sup. Fan Heat		
Ret. Fan Heat		
Duct Heat Pkup		
Underflr Sup Ht Pkup		
Supply Air Leakage		
Grand Total ==>	162,148	100.00

HEATING COIL PEAK

Mo/Hr: Heating Design
OADB: 15

	Space Peak Space Sens Btu/h	Coil Peak Tot Sens Btu/h	Percent Of Total (%)
Envelope Loads			
Skylite Solar	0	0	0.00
Skylite Cond	0	0	0.00
Roof Cond	0	0	0.00
Glass Solar	0	0	0.00
Glass/Door Cond	-14,175	-14,175	10.72
Wall Cond	-1,563	-2,631	1.99
Partition/Door	0	0	0.00
Floor	0	0	0.00
Adjacent Floor	0	0	0
Infiltration	-11,805	-11,805	8.93
Sub Total ==>	-27,543	-28,611	21.64
Internal Loads			
Lights	0	0	0.00
People	0	0	0.00
Misc	0	0	0.00
Sub Total ==>	0	0	0.00
Ceiling Load	-337	0	0.00
Ventilation Load	0	-104,161	78.80
Adj Air Trans Heat	0	0	0
Ov/Undr Sizing	0	0	0.00
Exhaust Heat		582	-0.44
OA Preheat Diff.		0	0.00
RA Preheat Diff.		0	0.00
Additional Reheat		0	0.00
Underflr Sup Ht Pkup		0	0.00
Supply Air Leakage		0	0.00
Grand Total ==>	-27,879	-132,191	100.00

TEMPERATURES

	Cooling	Heating
SADB	55.0	81.4
Ra Plenum	75.4	69.7
Return	75.4	69.7
Ret/OA	78.1	27.2
Fn MtrTD	0.0	0.0
Fn BldTD	0.0	0.0
Fn Frict	0.0	0.0

AIRFLOWS

	Cooling	Heating
Diffuser	7,290	2,187
Terminal	7,290	2,187
Main Fan	7,290	2,187
Sec Fan	0	0
Nom Vent	1,756	1,699
AHU Vent	1,756	1,699
Infil	193	193
MinStop/Rh	2,187	2,187
Return	7,483	2,380
Exhaust	1,948	1,891
Rm Exh	0	0
Auxiliary	0	0
Leakage Dwn	0	0
Leakage Ups	0	0

ENGINEERING CKS

	Cooling	Heating
% OA	24.1	77.7
cfm/ft²	1.89	0.57
cfm/ton	339.06	
ft²/ton	179.11	
Btu/hr·ft²	67.00	-34.33
No. People	155	

COOLING COIL SELECTION

	Total Capacity ton	Total Capacity MBh	Sens Cap. MBh	Coil Airflow cfm	Enter DB/WB/HR °F	Enter DB/WB/HR °F	Enter DB/WB/HR gr/lb	Leave DB/WB/HR °F	Leave DB/WB/HR °F	Leave DB/WB/HR gr/lb
Main Clg	21.5	258.0	184.3	7,159	78.1	65.3	73.0	55.0	53.4	58.5
Aux Clg	0.0	0.0	0.0	0	0.0	0.0	0.0	0.0	0.0	0.0
Opt Vent	0.0	0.0	0.0	0	0.0	0.0	0.0	0.0	0.0	0.0
Total	21.5	258.0								

AREAS

	Gross Total	Glass ft²	Glass (%)
Floor	3,851		
Part	0		
Int Door	0		
ExFlr	0		
Roof	0	0	0
Wall	1,220	364	30
Ext Door	0	0	0

HEATING COIL SELECTION

	Capacity MBh	Coil Airflow cfm	Ent °F	Lvg °F
Main Htg	-132.2	2,187	27.2	81.4
Aux Htg	0.0	0	0.0	0.0
Preheat	0.0	0	0.0	0.0
Humidif	0.0	0	0.0	0.0
Opt Vent	0.0	0	0.0	0.0
Total	-132.2			

Project Name:
Dataset Name: P3090_AHU_Latest.trc

TRACE® 700 v6.3.3 calculated at 09:30 AM on 06/20/2018
Alternative - 1 System Checksums Report Page 3 of 4

System Checksums

By lilker

NEW AHU-4 | **Single Zone**

COOLING COIL PEAK

Peaked at Time: Mo/Hr: 7 / 16
Outside Air: OADB/WB/HR: 87 / 72 / 95

	Space Sens. + Lat. Btu/h	Plenum Sens. + Lat Btu/h	Net Total Btu/h	Percent Of Total (%)
Envelope Loads				
Skylite Solar	0	0	0	0
Skylite Cond	0	0	0	0
Roof Cond	8,509	0	8,509	3
Glass Solar	17,310	0	17,310	6
Glass/Door Cond	1,965	0	1,965	1
Wall Cond	8,399	156	8,555	3
Partition/Door	0		0	0
Floor	0		0	0
Adjacent Floor	0	0	0	0
Infiltration	10,950		10,950	4
Sub Total ==>	47,132	156	47,288	16
Internal Loads				
Lights	9,240	2,310	11,550	4
People	158,500	0	158,500	54
Misc	25,666	0	25,666	9
Sub Total ==>	193,405	2,310	195,715	67
Ceiling Load	63	-63	0	0
Ventilation Load	0	0	49,382	17
Adj Air Trans Heat	0		0	0
Dehumid. Ov Sizing			0	0
Ov/Undr Sizing	0		0	0
Exhaust Heat		-772	-772	0
Sup. Fan Heat			0	0
Ret. Fan Heat		0	0	0
Duct Heat Pkup		0	0	0
Underflr Sup Ht Pkup			0	0
Supply Air Leakage		0	0	0
Grand Total ==>	240,601	1,631	291,613	100.00

CLG SPACE PEAK

Mo/Hr: Sum of
OADB: Peaks

	Space Sensible Btu/h	Percent Of Total (%)
Envelope Loads		
Skylite Solar	0	0
Skylite Cond	0	0
Roof Cond	8,548	5
Glass Solar	18,722	12
Glass/Door Cond	1,859	1
Wall Cond	9,096	6
Partition/Door	0	0
Floor	0	0
Adjacent Floor	0	0
Infiltration	5,143	3
Sub Total ==>	43,368	28
Internal Loads		
Lights	9,240	6
People	79,250	50
Misc	25,666	16
Sub Total ==>	114,155	72
Ceiling Load	60	0
Ventilation Load	0	0
Adj Air Trans Heat	0	0
Ov/Undr Sizing	0	0
Grand Total ==>	157,584	100.00

HEATING COIL PEAK

Mo/Hr: Heating Design
OADB: 15

	Space Peak Space Sens Btu/h	Coil Peak Tot Sens Btu/h	Percent Of Total (%)
Envelope Loads			
Skylite Solar	0	0	0.00
Skylite Cond	0	0	0.00
Roof Cond	-6,456	-6,456	3.77
Glass Solar	0	0	0.00
Glass/Door Cond	-9,731	-9,731	5.67
Wall Cond	-9,126	-9,305	5.43
Partition/Door	0	0	0.00
Floor	0	0	0.00
Adjacent Floor	0	0	0
Infiltration	-26,748	-26,748	15.60
Sub Total ==>	-52,061	-52,240	30.47
Internal Loads			
Lights	0	0	0.00
People	0	0	0.00
Misc	0	0	0.00
Sub Total ==>	0	0	0.00
Ceiling Load	-50	0	0.00
Ventilation Load	0	-121,315	70.75
Adj Air Trans Heat	0	0	0
Ov/Undr Sizing	0	0	0.00
Exhaust Heat		2,090	-1.22
OA Preheat Diff.		0	0.00
RA Preheat Diff.		0	0.00
Additional Reheat		0	0.00
Underflr Sup Ht Pkup		0	0.00
Supply Air Leakage		0	0.00
Grand Total ==>	-52,111	-171,465	100.00

TEMPERATURES

	Cooling	Heating
SADB	55.0	76.6
Ra Plenum	76.0	69.2
Return	75.3	69.2
Ret/OA	78.5	54.0
Fn MtrTD	0.0	0.0
Fn BldTD	0.0	0.0
Fn Frict	0.0	0.0

AIRFLOWS

	Cooling	Heating
Diffuser	7,068	7,068
Terminal	7,068	7,068
Main Fan	7,068	7,068
Sec Fan	0	0
Nom Vent	1,979	1,979
AHU Vent	1,979	1,979
Infil	436	436
MinStop/Rh	0	0
Return	7,505	7,505
Exhaust	2,415	2,415
Rm Exh	0	0
Auxiliary	0	0
Leakage Dwn	0	0
Leakage Ups	0	0

ENGINEERING CKS

	Cooling	Heating
% OA	28.0	28.0
cfm/ft²	1.88	1.88
cfm/ton	290.86	
ft²/ton	154.73	
Btu/hr·ft²	77.56	-46.16
No. People	317	

COOLING COIL SELECTION

	Total Capacity ton	Total Capacity MBh	Sens Cap. MBh	Coil Airflow cfm	Enter DB/WB/HR °F	Enter DB/WB/HR °F	Enter DB/WB/HR gr/lb	Leave DB/WB/HR °F	Leave DB/WB/HR °F	Leave DB/WB/HR gr/lb
Main Clg	24.3	291.6	183.2	7,068	78.4	67.2	82.2	55.0	54.1	60.9
Aux Clg	0.0	0.0	0.0	0	0.0	0.0	0.0	0.0	0.0	0.0
Opt Vent	0.0	0.0	0.0	0	0.0	0.0	0.0	0.0	0.0	0.0
Total	24.3	291.6								

AREAS

	Gross Total	Glass ft²	Glass (%)
Floor	3,760		
Part	0		
Int Door	0		
ExFlr	0		
Roof	3,557	0	0
Wall	3,328	306	9
Ext Door	0	0	0

HEATING COIL SELECTION

	Capacity MBh	Coil Airflow cfm	Ent °F	Lvg °F
Main Htg	-173.6	7,068	54.6	76.6
Aux Htg	0.0	0	0.0	0.0
Preheat	-7.5	7,068	54.0	55.0
Humidif	0.0	0	0.0	0.0
Opt Vent	0.0	0	0.0	0.0
Total	-173.6			

Project Name:
Dataset Name: P3090_AHU_Latest.trc

TRACE® 700 v6.3.3 calculated at 09:30 AM on 06/20/2018
Alternative - 1 System Checksums Report Page 4 of 4

PEAK COOLING LOADS

MAIN SYSTEM

By lilker

System	Zone	Room		Floor Area ft²	SPACE Peak Time Mo/Hr	OA Condition DB °F	OA Condition WB °F	Room Dry Bulb °F	Supply Dry Bulb °F	Space Air Flow cfm	Space Sensible Load Btu/h	Space Latent Load Btu/h	COIL Peak Time Mo/Hr	OA Condition DB °F	OA Condition WB °F	Supply Dry Bulb °F	Coil Airflow cfm	Coil Sensible Load Btu/h	Coil Latent Load Btu/h
Alternative 1																			
		201-1ST GR CLASSROOM	Peak	750	7/9	77	66	75.0	55.0	1,364	30,421	8,934	7/10	79	67	55.0	1,337	32,201	11,323
		202-KIN CLASSROOM	Peak	939	7/17	86	71	75.0	55.0	1,633	36,411	8,487	7/17	86	71	55.0	1,633	41,682	15,120
		203-1ST GR CLASSROOM	Peak	731	7/9	77	66	75.0	55.0	1,360	30,329	8,679	7/9	77	66	55.0	1,360	31,736	10,774
		204-KIN CLASSROOM	Peak	930	7/17	86	71	75.0	55.0	1,637	36,496	8,730	7/17	86	71	55.0	1,637	41,840	15,503
		301-2ND GR CLASSROOM	Peak	750	7/9	77	66	75.0	55.0	1,362	30,366	8,934	7/10	79	67	55.0	1,334	32,114	11,323
		302-3RD GR CLASSROOM	Peak	754	7/17	86	71	75.0	55.0	1,446	32,239	9,342	7/16	87	72	55.0	1,400	36,991	16,961
		303-2ND GR CLASSROOM	Peak	731	7/9	77	66	75.0	55.0	1,371	30,556	8,929	7/9	77	66	55.0	1,371	31,977	11,073
		304-3RD GR CLASSROOM	Peak	755	7/17	86	71	75.0	55.0	1,447	32,250	9,342	7/16	87	72	55.0	1,401	37,003	16,964
		306-3RD GR CLASSROOM	Peak	760	7/17	86	71	75.0	55.0	1,449	32,300	9,346	7/16	87	72	55.0	1,403	37,062	16,979
		401-STAFF LAUCH ROOM	Peak	456	7/9	77	66	75.0	55.0	969	21,605	5,862	7/10	79	67	55.0	945	21,990	6,640
		402-4TH GR CLASSROOM	Peak	755	7/17	86	71	75.0	55.0	1,447	32,264	9,342	7/16	87	72	55.0	1,401	37,019	16,964
		403-TEACHERS WORKROOM	Peak	351	7/9	77	66	75.0	55.0	433	9,658	336	7/9	77	66	55.0	433	10,037	591
		404-4TH GR CLASSROOM	Peak	755	7/17	86	71	75.0	55.0	1,445	32,220	9,342	7/16	87	72	55.0	1,400	36,970	16,964
		405-SPECIAL ED CLASSROOM	Peak	453	7/9	77	66	75.0	55.0	829	18,485	5,361	7/9	77	66	55.0	829	19,352	6,656
		407A-GUIDANCE OFFICE	Peak	122	7/15	87	72	75.0	55.0	67	1,494	352	7/15	87	72	55.0	67	1,688	557
		407B-GUIDANCE OFFICE	Peak	125	7/15	87	72	75.0	55.0	68	1,524	354	7/15	87	72	55.0	68	1,722	563
		407C-CONFERENCE ROOM	Peak	139	7/9	77	66	75.0	55.0	397	8,856	1,784	7/10	79	67	55.0	385	8,938	2,021
		407D-STOREROOM	Peak	58	7/11	82	68	75.0	55.0	24	543	18	7/13	86	70	55.0	23	648	121
		407-WAITING ROOM	Peak	69	7/15	87	72	75.0	55.0	43	954	308	7/15	87	72	55.0	43	1,091	460
		409-STORAGE	Peak	294	7/15	87	72	75.0	55.0	44	991	245	7/15	87	72	55.0	44	1,529	833
		501-LIBRARY	Peak	969	7/9	77	66	75.0	55.0	1,408	31,384	4,987	7/10	79	67	55.0	1,375	32,588	6,149
		502-5TH GR CLASSROOM	Peak	755	7/17	86	71	75.0	55.0	1,423	31,729	9,342	7/17	86	71	55.0	1,423	38,834	16,256
		503-READING RESOURCE ROOM	Peak	411	7/9	77	66	75.0	55.0	482	10,757	1,101	7/10	79	67	55.0	473	11,202	1,376
		504-5TH GR CLASSROOM	Peak	755	7/17	86	71	75.0	55.0	1,421	31,687	9,342	7/17	86	71	55.0	1,421	38,780	16,256
		-CORRIDOR 2A	Peak	686	7/15	87	72	75.0	55.0	107	2,394	572	7/15	87	72	55.0	107	3,159	1,258
		-CORRIDOR 3A	Peak	686	7/15	87	72	75.0	55.0	107	2,394	572	7/15	87	72	55.0	107	3,159	1,258
		-CORRIDOR 4A	Peak	686	7/15	87	72	75.0	55.0	107	2,394	572	7/15	87	72	55.0	107	3,159	1,258
		-CORRIDOR 5A	Peak	686	7/15	87	72	75.0	55.0	107	2,393	572	7/16	87	72	55.0	107	4,748	1,296
NEW AHU-1			**Peak**	**16,311**		**86**	**71**	**75.0**	**55.0**	**24,001**	**535,094**	**141,087**		**87**	**72**	**55.0**	**23,637**	**656,923**	**223,496**
NEW AHU-1			**Block**	**16,311**	**7/17**	**86**	**71**	**75.0**	**55.0**	**20,180**	**449,896**	**144,048**	**7/16**	**87**	**72**	**55.0**	**19,875**	**540,597**	**260,098**
		101-PRE-K-CLASSROOM	Peak	903	7/9	77	66	75.0	55.0	1,496	33,356	7,770	7/10	79	67	55.0	1,461	35,109	10,784
		102-PRE-K CLASSROOM	Peak	913	7/17	86	71	75.0	55.0	1,476	32,909	8,516	7/16	87	72	55.0	1,430	38,310	17,240
		104-PRINCIPAL OFFICE	Peak	339	7/17	86	71	75.0	55.0	533	11,888	1,034	7/17	86	71	55.0	533	12,561	1,627
		105-PRE K CLASSROOM	Peak	805	7/9	77	66	75.0	55.0	1,442	32,146	6,991	7/9	77	66	55.0	1,442	33,589	9,470

System	Zone Room		Floor Area ft²	SPACE Peak Time Mo/Hr	OA Condition DB °F	OA Condition WB °F	Room Dry Bulb °F	Supply Dry Bulb °F	Space Air Flow cfm	Space Sensible Load Btu/h	Space Latent Load Btu/h	COIL Peak Time Mo/Hr	OA Condition DB °F	OA Condition WB °F	Supply Dry Bulb °F	Coil Airflow cfm	Coil Sensible Load Btu/h	Coil Latent Load Btu/h
	106-GENERAL OFFICE	Peak	495	7/17	86	71	75.0	55.0	410	9,135	1,665	7 /16	87	72	55.0	401	9,939	2,700
	107A-NURSES OFFICE	Peak	167	7/9	77	66	75.0	55.0	240	5,356	800	7 /10	79	67	55.0	236	5,562	966
	107B-EXAMINATION ROOM	Peak	100	7/15	87	72	75.0	55.0	46	1,016	89	7 /15	87	72	55.0	46	1,205	302
	107-WAITING	Peak	79	7/15	87	72	75.0	55.0	47	1,053	320	7 /15	87	72	55.0	47	1,205	493
	109-PARENTS COMMUNITY ROOM	Peak	278	7/9	77	66	75.0	55.0	551	12,288	833	7 /9	77	66	55.0	551	12,621	1,022
	111-RECORDS ROOM	Peak	112	7/15	87	72	75.0	55.0	17	374	99	7 /15	87	72	55.0	17	585	338
	205-1ST GR CLASSROOM	Peak	750	7/9	77	66	75.0	55.0	1,379	30,752	8,974	7 /9	77	66	55.0	1,379	32,139	11,604
	206-SPEECH RESOURCE ROOM	Peak	351	7/17	86	71	75.0	55.0	648	14,452	4,765	7 /16	87	72	55.0	629	17,025	8,842
	207-STORAGE	Peak	160	7/12	84	69	75.0	55.0	57	1,266	95	7 /13	86	70	55.0	56	1,564	363
	210 KIN CLASSROOM	Peak	887	7/17	86	71	75.0	55.0	1,594	35,531	8,244	7 /17	86	71	55.0	1,594	40,669	15,061
	305-2ND GR CLASSROOM	Peak	748	7/9	77	66	75.0	55.0	1,378	30,733	8,974	7 /9	77	66	55.0	1,378	32,119	11,602
	307-STORAGE	Peak	282	7/12	84	69	75.0	55.0	92	2,061	167	7 /15	87	72	55.0	90	2,573	851
	308-SUPERVISOR	Peak	152	7/15	87	72	75.0	55.0	80	1,795	385	7 /15	87	72	55.0	80	2,029	636
	310-EXERCICE RM	Peak	1,191	7/17	86	71	75.0	55.0	1,910	42,575	6,429	7 /17	86	71	55.0	1,910	49,101	15,007
	406-4TH GR CLASSROOM	Peak	787	7/17	86	71	75.0	55.0	1,461	32,562	9,410	7 /16	87	72	55.0	1,415	37,461	17,580
	408-PROJECT ROOM	Peak	1,203	7/17	86	71	75.0	55.0	2,330	51,955	15,438	7 /17	86	71	55.0	2,330	60,942	27,587
	410-STORAGE	Peak	130	7/15	87	72	75.0	55.0	39	877	115	7 /15	87	72	55.0	39	1,122	392
	505A-CUSTODIAL OFFICE	Peak	250	7/9	77	66	75.0	55.0	526	11,724	825	7 /10	79	67	55.0	507	11,759	1,025
	505-CUSTODIAL WORKSHOP	Peak	397	7/9	77	66	75.0	55.0	543	12,100	2,619	7 /10	79	67	55.0	532	12,912	3,583
	506-5TH GR CLASSROOM	Peak	760	7/17	86	71	75.0	55.0	1,422	31,713	9,387	7 /17	86	71	55.0	1,422	38,910	16,787
	508-MUSIC ROOM	Peak	808	7/17	86	71	75.0	55.0	1,398	31,169	10,928	7 /16	87	72	55.0	1,361	37,204	20,240
	509-STORAGE	Peak	281	7/12	84	69	75.0	55.0	54	1,209	167	7 /15	87	72	55.0	50	2,316	848
	510-SPECIAL ED CLASSROOM	Peak	534	7/17	86	71	75.0	55.0	1,058	23,582	6,198	7 /17	86	71	55.0	1,058	27,288	11,130
	-CORRIDOR 1A	Peak	592	7/9	77	66	75.0	55.0	168	3,739	177	7 /10	79	67	55.0	164	4,130	421
	-CORRIDOR 1B	Peak	592	7/9	77	66	75.0	55.0	168	3,739	177	7 /10	79	67	55.0	164	4,130	421
	-CORRIDOR 2B	Peak	714	7/9	77	66	75.0	55.0	183	4,088	213	7 /10	79	67	55.0	181	4,561	508
	-CORRIDOR 3B	Peak	714	7/9	77	66	75.0	55.0	183	4,088	213	7 /10	79	67	55.0	181	4,561	508
	-CORRIDOR 4B	Peak	714	7/9	77	66	75.0	55.0	183	4,088	213	7 /10	79	67	55.0	181	4,561	508
	-CORRIDOR 5B	Peak	714	7/9	77	66	75.0	55.0	183	4,088	213	7 /10	79	67	55.0	181	4,561	508
	-ENTRY VESTIBULE	Peak	47	7/17	86	71	75.0	55.0	480	10,700	39	7 /17	86	71	55.0	480	10,918	87
	-LOBBY	Peak	640	7/15	87	72	75.0	55.0	370	8,253	2,318	7 /15	87	72	55.0	370	9,417	3,621
NEW AHU-2		**Peak**	**18,589**		**86**	**71**	**75.0**	**55.0**	**24,147**	**538,357**	**124,800**		**87**	**72**	**55.0**	**23,897**	**659,135**	**214,663**
NEW AHU-2		**Block**	**18,589**	**7 /17**	**86**	**71**	**75.0**	**55.0**	**20,687**	**461,214**	**129,419**	**7 /16**	**87**	**72**	**55.0**	**20,320**	**547,861**	**250,822**
	105E-CAN ROOM	Peak	58	7/15	87	72	75.0	55.0	8	188	45	7 /16	87	72	55.0	8	302	159
	108-CAFETERIA	Peak	2,167	7/17	86	71	75.0	55.0	4,795	106,905	38,114	7 /16	87	72	55.0	4,675	124,672	62,589
	110-SERVERY	Peak	286	7/15	87	72	75.0	55.0	458	10,210	845	7 /16	87	72	55.0	458	11,176	2,488
	115A-NON FOOD STORAGE	Peak	78	7/15	87	72	75.0	55.0	11	252	61	7 /16	87	72	55.0	11	406	214
	115-C-LOCKER ROOM M	Peak	66	7/15	87	72	75.0	55.0	10	214	63	7 /16	87	72	55.0	10	244	64
	115D-LOCKER ROOM W	Peak	67	7/15	87	72	75.0	55.0	10	217	64	7 /16	87	72	55.0	10	248	65
	115-KITCHEN	Peak	1,129	7/12	84	69	75.0	55.0	1,998	44,547	2,863	7 /15	87	72	55.0	1,989	47,503	8,007
NEW AHU-3		**Peak**	**3,851**		**86**	**71**	**75.0**	**55.0**	**7,290**	**162,533**	**42,054**		**87**	**72**	**55.0**	**7,161**	**184,557**	**73,587**
NEW AHU-3		**Block**	**3,851**	**7 /17**	**86**	**71**	**75.0**	**55.0**	**7,290**	**162,148**	**42,304**	**7 /16**	**87**	**72**	**55.0**	**7,159**	**184,305**	**73,709**
	-GYM	Peak	2,782	7/17	86	71	75.0	55.0	5,920	131,979	74,040	7 /16	87	72	55.2	5,920	152,531	92,466

System	Zone	Room		Floor Area ft²	SPACE Peak Time Mo/Hr	OA Condition DB °F	OA Condition WB °F	Room Dry Bulb °F	Supply Dry Bulb °F	Space Air Flow cfm	Space Sensible Load Btu/h	Space Latent Load Btu/h	COIL Peak Time Mo/Hr	OA Condition DB °F	OA Condition WB °F	Supply Dry Bulb °F	Coil Airflow cfm	Coil Sensible Load Btu/h	Coil Latent Load Btu/h
	-GYM EQ STORAGE RM		Peak	135	7/18	84	71	75.0	55.0	75	1,665	144	7 /18	84	71	55.0	75	1,966	516
	-HEALTH OFFICE		Peak	68	7/14	87	71	75.0	55.0	101	2,252	550	7 /15	87	72	55.0	101	2,477	841
	-STAGE		Peak	775	7/17	86	71	75.0	55.0	973	21,688	9,200	7 /16	87	72	55.5	973	26,204	14,611
NEW AHU-4			**Peak**	**3,760**		**86**	**71**	**75.0**	**55.0**	**7,068**	**157,584**	**83,935**		**87**	**72**	**55.2**	**7,068**	**183,178**	**108,435**
NEW AHU-4			**Block**	**3,760**	**7/17**	**86**	**71**	**75.0**	**55.0**	**7,068**	**157,453**	**83,942**	**7 /16**	**87**	**72**	**55.2**	**7,068**	**183,599**	**108,466**

PS 320X
Heating Calculation for the Size of Boilers
60% Submission Heating Calculation

Date: 6/22/2018

1. Instantaneous Block Heating Load and Conductive Heat Load

A. Conductive Heat Load:

(Total Glass Area)	X	(Glass "U")	X	61 °F			
11,220	X	0.45	X	61	=	307,989	BTU/HR
(Total Wall Area)	X	(Wall "U")	X	61 °F			
37,400	X	0.0606	X	61	=	138,253	BTU/HR
(Total Roof Area)	X	(Roof "U")	X	61 °F			
9,715	X	0.033	X	61	=	19,556	BTU/HR
(Total First Slab Area)	X	(Floor "U")	X	30 °F			
9,715	X	0.1	X	30	=	29,145	BTU/HR
				Sub Total:		494,943	BTU/HR
B. Total Block Heating Load							
C. Heating Load From AHU-1						452,000	BTU/HR
D. Heating Load From AHU-2						439,200	BTU/HR
E. Heating Load From AHU-3						186,500	BTU/HR
F. Heating Load From AHU-4						256,000	BTU/HR
G. Total Building Heating Load						1,828,643	BTU/HR

2. Heating Safety Factor 30%

3. Total Heating Load: 1,828,643 BTU/HR X 1.25 = 2,285,804 BTU/HR

4. As per SCA HVAC Design Standard No. 6.2.13 - Two (2) Boilers, each sized for 75% of building total heating load shall be provided for the school.

One (1) Boiler Minimum
Net Capacity: 2,285,804 X 0.75 = 1,714,353 BTU/HR

Two (2) Boilers to be considered at the capacity = 1800 MBH/EACH

LWT = 160 °F
EWT = 120°F or less

Notes:
1. The "U" values considered in this calculations are in compliance with SCA standards Section: 4.0 Building Envelope
1. The boiler sizing is in compliance with SCA standards

PS 320X

Summary Load Calculations for the Chiller
60% Submission

SYSTEM	TOTAL COOLING LOAD	
AHU-1 (Classroom)	816 MBH*	68 TONS*
AHU-2 (Classroom)	787 MBH*	66 TONS*
AHU-3 (Kitchen/café')	347 MBH*	29 TONS*
AHU-4 (Gym)	454 MBH*	38 TONS*
Total	2404 MBH*	200 TONS*

Cooling Safety Factor (considering reduction of cooling capacity after several years of service): add 5%

Cooling Safety Factor (considering reduction of cooling capacity with 30% of gylcol): add 5%

Total Cooling Load: 200 Tons X 1.10= 220 Tons

Actual Capacity = 216 .2TONS (Based on Arctichill Air Cooled Chiller with 30% Gylcol)

***BASED ON PERFORMANCE DATA SHEET OF SELECTED EQUIPMENT.**

Section: 6.2.13 Sizing of Equipment.

DUCT PRESSURE LOSS CALCULATIONS

AHU-1

CALCULATION IS BASED ON DUCT RUN BETWEEN AHU-1 UNIT AND LONGEST DUCT RUN LOCATED ON THE SECOND LEVEL

Project Name: **PS 320X**

Project No. : **LILKER PROJECT #P3090**

SUPPLY

Item No.	Element	Condition	Equivalent Duct Length, Ft	S.P. Loss in W.G.	Quantity	Total S.P. Loss in W.G.
1	Low Pressure Duct*	N/A	N/A	0.08"/100'	210	0.42
2	Low Pressure Duct*	N/A	N/A	0.1"/100'	N/A	-
3	Sound Trap	Manufacturer's Data	N/A	0.200	1	0.20
4	Abrupt Contraction (Plenum losses)	V1/V2 = 0	N/A	0.190	1	0.19
6	Rectangle Radius Elbow 90°	No Vanes R/D = 1.50	7	0.014	5	0.07
7	Rectangle Square Elbow 90°	With Vanes	15	0.030	3	0.09
8	Double Elbow	W/D = 1 R/D = 1.25	22	0.044	1	0.04
9	90° Tee & 180° Cross**	$\frac{Q_{branch}}{Q_{main\ upstrem}} = 0.3$	N/A	0.010	7	0.07
10	Vol. Damper**	Co=0.08	N/A	0.020	2	0.04
11	Fire Damper**	Co=0.19	N/A	0.050	1	0.05
12	F/S Damper**	Manufacturer's Data	N/A	0.100	3	0.30
13	VAV Box	Manufacturer's Data	N/A	0.500	1	0.50
14	Fan-Powered Box	Manufacturer's Data	N/A	0.050	N/A	-
15	Air Outlet	Manufacturer's Data	N/A	0.050	1	0.05
	Total					**2.02**

RETURN

Item No.	Element	Condition	Equivalent Duct Length, Ft	S.P. Loss in W.G.	Quantity	Total S.P. Loss in W.G.
1	Low Pressure Duct	N/A	N/A	0.08"/100'	230	0.18
2	Sound Trap	Manufacturer's Data	N/A	0.200	1	0.20
3	Abrupt Expansion (Plenum losses)	V1/V2 = 0.20	N/A	0.050	2	0.10
4	Rectangle Radius Elbow 90°	No Vanes R/D = 1.50	6	0.006	2	0.01
5	Rectangle Square Elbow 90°	With Vanes	2	0.012	4	0.05
6	Double Elbow	W/D =1 R/D = 1.25	2	0.018	1	0.02
7	90° Tee & 180° Cross***	$\frac{Q_{branch}}{Q_{main\ upstrem}} = 0.3$	1	0.006	6	0.04
8	Air Outlet	Manufacturer's Data	N/A	0.050	1	0.05
9	Vol. Damper***	Co=0.08	N/A	0.012	2	0.02
10	Fire Damper***	Co=0.19	N/A	0.0285	1	0.03
11	F/S Damper***	Manufacturer's Data	N/A	0.040	3	0.12
	Total					**0.82**

Notes:

1. *R/D - Radius & Diameter Ratio*
2. *V - Duct Velocity*
3. *W/D - Width/Depth Ratio; R/D - Elbow Radius/Duct Depth Ratio*
4. *Q - CFM Capacity*
5. * Calculation is based on Equal friction method
6. ** Calculation is based on velocity pressure equal to 0.25 for maximum velocity of 2000 fpm.
7. *** Calculation is based on velocity pressure equal to 0.15 for maximum velocity of 1500 fpm.
8. Co - Loss coefficient

DUCT PRESSURE LOSS CALCULATIONS

AHU-2

CALCULATION IS BASED ON DUCT RUN BETWEEN AHU-2 UNIT AND LONGEST DUCT RUN LOCATED ON THE FIRST LEVEL

Project Name: **PS 320X**

Project No. : **LILKER PROJECT #P3090**

SUPPLY

Item No.	Element	Condition	Equivalent Duct Length, Ft	S.P. Loss in W.G.	Quantity	Total S.P. Loss in W.G.
1	Low Pressure Duct*	N/A	N/A	0.08"/100'	237	0.47
2	Low Pressure Duct*	N/A	N/A	0.1"/100'	N/A	-
3	Sound Trap	Manufacturer's Data	N/A	0.200	1	0.20
4	Abrupt Contraction (Plenum losses)	V1/V2 = 0	N/A	0.190	1	0.19
6	Rectangle Radius Elbow 90°	No Vanes R/D = 1.50	7	0.014	4	0.06
7	Rectangle Square Elbow 90°	With Vanes	15	0.030	2	0.06
8	Double Elbow	W/D = 1 R/D = 1.25	22	0.044	0	0.00
9	90° Tee & 180° Cross**	$\frac{Q_{branch}}{Q_{main\ upstrem}} = 0.3$	N/A	0.010	6	0.06
10	Vol. Damper**	Co=0.08	N/A	0.020	2	0.04
11	Fire Damper**	Co=0.19	N/A	0.050	1	0.05
12	F/S Damper**	Manufacturer's Data	N/A	0.100	2	0.20
13	VAV Box	Manufacturer's Data	N/A	0.500	1	0.50
14	Fan-Powered Box	Manufacturer's Data	N/A	0.050	N/A	-
15	Air Outlet	Manufacturer's Data	N/A	0.050	1	0.05
	Total					**1.88**

RETURN

Item No.	Element	Condition	Equivalent Duct Length, Ft	S.P. Loss in W.G.	Quantity	Total S.P. Loss in W.G.
1	Low Pressure Duct	N/A	N/A	0.08"/100'	230	0.18
2	Sound Trap	Manufacturer's Data	N/A	0.240	1	0.24
3	Abrupt Expansion (Plenum losses)	V1/V2 = 0.20	N/A	0.050	1	0.05
4	Rectangle Radius Elbow 90°	No Vanes R/D = 1.50	6	0.006	2	0.01
5	Rectangle Square Elbow 90°	With Vanes	2	0.012	6	0.07
6	Double Elbow	W/D =1 R/D = 1.25	2	0.018	1	0.02
7	90° Tee & 180° Cross***	$\frac{Q_{branch}}{Q_{main\ upstrem}} = 0.3$	1	0.006	7	0.04
8	Air Outlet	Manufacturer's Data	N/A	0.050	1	0.05
9	Vol. Damper***	Co=0.08	N/A	0.012	1	0.01
10	Fire Damper***	Co=0.19	N/A	0.0285	1	0.03
11	F/S Damper***	Manufacturer's Data	N/A	0.040	2	0.08
	Total					**0.79**

Notes:

1. *R/D - Radius & Diameter Ratio*
2. *V - Duct Velocity*
3. *W/D - Width/Depth Ratio; R/D - Elbow Radius/Duct Depth Ratio*
4. *Q - CFM Capacity*
5. * Calculation is based on Equal friction method
6. ** Calculation is based on velocity pressure equal to 0.25 for maximum velocity of 2000 fpm.
7. *** Calculation is based on velocity pressure equal to 0.15 for maximum velocity of 1500 fpm.
8. Co - Loss coefficient

DUCT PRESSURE LOSS CALCULATIONS

AHU-3

CALCULATION IS BASED ON DUCT RUN BETWEEN AHU-3 UNIT AND LONGEST DUCT RUN LOCATED ON THE FIRST LEVEL

Project Name: **PS 320X**

Project No. : **LILKER PROJECT #P3090**

SUPPLY

Item No.	Element	Condition	Equivalent Duct Length, Ft	S.P. Loss in W.G.	Quantity	Total S.P. Loss in W.G.
1	Low Pressure Duct*	N/A	N/A	0.08"/100'	220	0.44
2	Low Pressure Duct*	N/A	N/A	0.1"/100'	N/A	-
3	Sound Trap	Manufacturer's Data	N/A	0.200	1	0.20
4	Abrupt Contraction (Plenum losses)	V1/V2 = 0	N/A	0.190	2	0.38
6	Rectangle Radius Elbow 90°	No Vanes R/D = 1.50	7	0.014	1	0.01
7	Rectangle Square Elbow 90°	With Vanes	15	0.030	3	0.09
8	Double Elbow	W/D = 1 R/D = 1.25	22	0.044	1	0.04
9	90° Tee & 180° Cross**	$\frac{Q_{branch}}{Q_{main\ upstrem}} = 0.3$	N/A	0.010	7	0.07
10	Vol. Damper**	Co=0.08	N/A	0.020	2	0.04
11	Fire Damper**	Co=0.19	N/A	0.050	1	0.05
12	F/S Damper**	Manufacturer's Data	N/A	0.100	2	0.20
13	VAV Box	Manufacturer's Data	N/A	0.500	0	0.00
14	Fan-Powered Box	Manufacturer's Data	N/A	0.050	N/A	-
15	Air Outlet	Manufacturer's Data	N/A	0.050	1	0.05
	Total					**1.58**

RETURN

Item No.	Element	Condition	Equivalent Duct Length, Ft	S.P. Loss in W.G.	Quantity	Total S.P. Loss in W.G.
1	Low Pressure Duct	N/A	N/A	0.08"/100'	210	0.17
2	Sound Trap	Manufacturer's Data	N/A	0.200	1	0.20
3	Abrupt Expansion (Plenum losses)	V1/V2 = 0.20	N/A	0.050	2	0.10
4	Rectangle Radius Elbow 90°	No Vanes R/D = 1.50	6	0.006	2	0.01
5	Rectangle Square Elbow 90°	With Vanes	2	0.012	4	0.05
6	Double Elbow	W/D =1 R/D = 1.25	2	0.018	1	0.02
7	90° Tee & 180° Cross***	$\frac{Q_{branch}}{Q_{main\ upstrem}} = 0.3$	1	0.006	6	0.04
8	Air Outlet	Manufacturer's Data	N/A	0.050	1	0.05
9	Vol. Damper***	Co=0.08	N/A	0.012	2	0.02
10	Fire Damper***	Co=0.19	N/A	0.0285	1	0.03
11	F/S Damper***	Manufacturer's Data	N/A	0.040	2	0.08
	Total					**0.76**

Notes:

1. *R/D - Radius & Diameter Ratio*
2. *V - Duct Velocity*
3. *W/D - Width/Depth Ratio; R/D - Elbow Radius/Duct Depth Ratio*
4. *Q - CFM Capacity*
5. * Calculation is based on Equal friction method
6. ** Calculation is based on velocity pressure equal to 0.25 for maximum velocity of 2000 fpm.
7. *** Calculation is based on velocity pressure equal to 0.15 for maximum velocity of 1500 fpm.
8. Co - Loss coefficient

DUCT PRESSURE LOSS CALCULATIONS

AHU-4

CALCULATION IS BASED ON DUCT RUN BETWEEN AHU-4 UNIT AND LONGEST DUCT RUN LOCATED ON THE THIRD LEVEL GYMATORIUM

Project Name: **PS 320X**
Project No. : **LILKER PROJECT #P3090**

SUPPLY

Item No.	Element	Condition	Equivalent Duct Length, Ft	S.P. Loss in W.G.	Quantity	Total S.P. Loss in W.G.
1	Low Pressure Duct*	N/A	N/A	0.08"/100'	190	0.38
2	Low Pressure Duct*	N/A	N/A	0.1"/100'	N/A	-
3	Sound Trap	Manufacturer's Data	N/A	0.200	1	0.20
4	Abrupt Contraction (Plenum losses)	V1/V2 = 0	N/A	0.190	2	0.38
6	Rectangle Radius Elbow 90°	No Vanes R/D = 1.50	7	0.014	2	0.03
7	Rectangle Square Elbow 90°	With Vanes	15	0.030	4	0.12
8	Double Elbow	W/D = 1 R/D = 1.25	22	0.044	1	0.04
9	90° Tee & 180° Cross**	$\frac{Q_{branch}}{Q_{main\ upstrem}} = 0.3$	N/A	0.010	5	0.05
10	Vol. Damper**	Co=0.08	N/A	0.020	1	0.02
11	Fire Damper**	Co=0.19	N/A	0.050	1	0.05
12	F/S Damper**	Manufacturer's Data	N/A	0.100	2	0.20
13	VAV Box	Manufacturer's Data	N/A	0.500	0	0.00
14	Fan-Powered Box	Manufacturer's Data	N/A	0.050	N/A	-
15	Air Outlet	Manufacturer's Data	N/A	0.050	1	0.05
	Total					**1.52**

RETURN

Item No.	Element	Condition	Equivalent Duct Length, Ft	S.P. Loss in W.G.	Quantity	Total S.P. Loss in W.G.
1	Low Pressure Duct	N/A	N/A	0.08"/100'	205	0.16
2	Sound Trap	Manufacturer's Data	N/A	0.200	1	0.20
3	Abrupt Expansion (Plenum losses)	V1/V2 = 0.20	N/A	0.050	2	0.10
4	Rectangle Radius Elbow 90°	No Vanes R/D = 1.50	6	0.006	2	0.01
5	Rectangle Square Elbow 90°	With Vanes	2	0.012	0	0.00
6	Double Elbow	W/D =1 R/D = 1.25	2	0.018	2	0.04
7	90° Tee & 180° Cross***	$\frac{Q_{branch}}{Q_{main\ upstrem}} = 0.3$	1	0.006	7	0.04
8	Air Outlet	Manufacturer's Data	N/A	0.050	1	0.05
9	Vol. Damper***	Co=0.08	N/A	0.012	1	0.01
10	Fire Damper***	Co=0.19	N/A	0.0285	1	0.03
11	F/S Damper***	Manufacturer's Data	N/A	0.040	2	0.08
	Total					**0.72**

Notes:

1. *R/D - Radius & Diameter Ratio*
2. *V - Duct Velocity*
3. *W/D - Width/Depth Ratio; R/D - Elbow Radius/Duct Depth Ratio*
4. *Q - CFM Capacity*
5. * Calculation is based on Equal friction method
6. ** Calculation is based on velocity pressure equal to 0.25 for maximum velocity of 2000 fpm.
7. *** Calculation is based on velocity pressure equal to 0.15 for maximum velocity of 1500 fpm.
8. Co - Loss coefficient

CHILLER (CH-1)

BY

MANUFACTURER

ARCTICHILL

PS 320X
Air Cooled
Modular Chiller Data

Chiller System	
Model Number (qty)	(8) PACVMV0300D3-MM (eight nominal 30 Ton air cooled chiller modules)
Design Flow Rate	548 gpm
Fluid	30% propylene glycol
Refrigerant/Charge	R-410A/20 lbs. per circuit
Chiller Pressure Drop	6.0 psi
Entering Fluid Temperature	55 F
Leaving Fluid Temperature	45 F
Ambient Design Temperature	95 F
Max Evap Operating Pressure	650 psi
System Capacity	2,594,000 Btu/hr (216.2 tons)
Electrical Power Supply	208/60/3
Chiller Modules (8)	
Compressors	2/module
HP	15
LRA	340 amps
RLA	46 amps (ea)
Fans (Qty 2 - ECM type)	5.7 amps (ea)
Fan hp	2.5 (approximate)
Fan RPM	930
Total FLA	123 amps/chiller module
System #1 (4 Modules)	
Total FLA	492 amps
MCA	506 amps
MOP	600 amps (minimum of two 300 kcmil wires per pole)
System #2 (4 Modules)	
Total FLA	492 amps
MCA	506 amps
MOP	600 amps (minimum of two 300 kcmil wires per pole)
Dimensions	
Chiller Module (each)	38” W x 96” L x 89” H (height to top of cabinet; fan diffusers extend 18” higher)
System	266” W x 96” L x 89” H (height to top of cabinet; fan diffusers extend 18” higher)
Connections	6” roll grooved
Weight	
Chiller Module (each)	2,500 lbs/module
System	17,500 lbs
EER (at 100% design conditions)	10.2
EER (at 100% AHRI conditions)	10.1
IPLV	13.7

Date: February 21, 2018

NOTE:
1. 48" CLEARANCE REQUIRED FOR DISCHARGE AIR FROM FANS.
2. 36" CLEARANCE REQUIRED FOR INLET AIR AND SERVICE ON ALL SIDES.
3. THIS IS AN ASSEMBLY DRAWING. CHILLER MODULES ARE SHIPPED INDIVIDUALLY AND ASSEMBLED ON SITE.
4. WATER PIPING CONNECTION MAY BE ON EITHER SIDE 'B' OR 'D'. SPECIFY WHEN ORDERING.

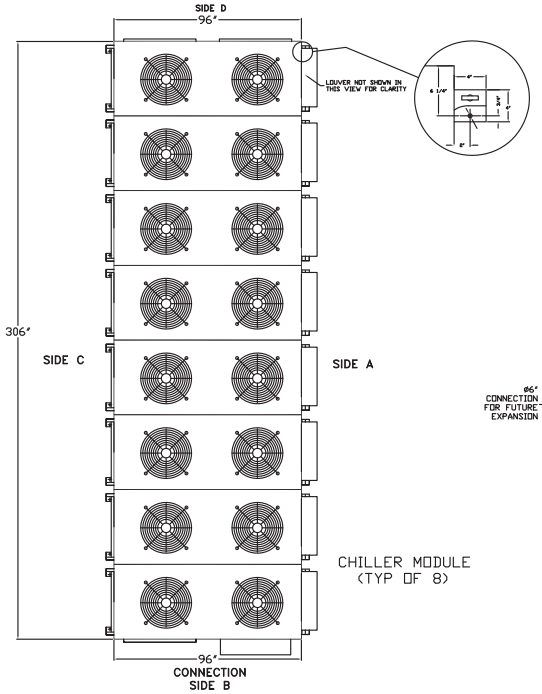

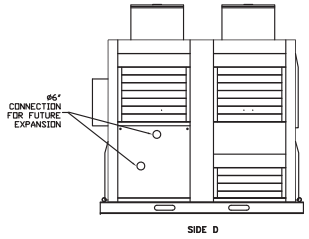

CHILLER MODULE
(TYP OF 8)

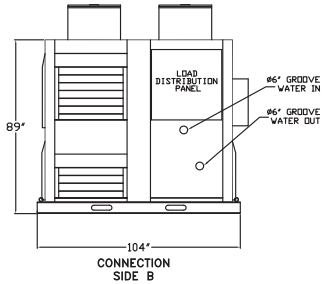

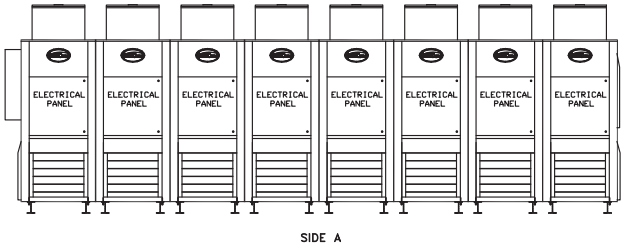

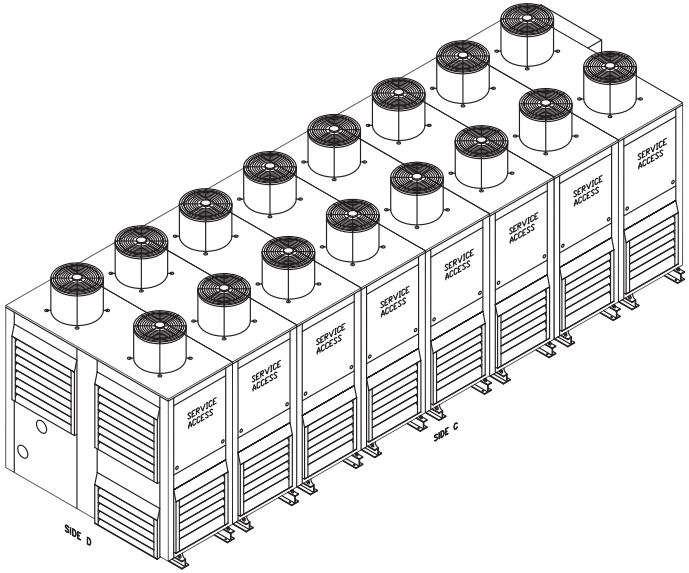

ARCTICHILL
CHILLED WATER SYSTEMS

NOTICE: THIS DRAWING HAS NOT BEEN PUBLISHED AND IS THE SOLE PROPERTY OF 200 PARK, INC. AND IS LENT TO THE BORROWER FOR HIS CONFIDENTIAL USE ONLY. IN CONSIDERATION OF THE LOAN OF THIS DRAWING, THE BORROWER PROMISES AND AGREES THAT IT SHALL NOT BE REPRODUCED, COPIED, LENT OR OTHERWISE DISPOSED OF DIRECTLY OR INDIRECTLY, NOR USED FOR ANY PURPOSE OTHER THAN FOR WHICH IT IS PROVIDED.

TITLE: *PROCESS 240 TON AIR COOLED MANHATTAN CHILLER SYSTEM*

MODEL:

ENGINEER:
CUSTOMER:
JOB:

DRAWN BY: CW	REV:	REV BY:	DATE: 05/26/15	SCALE: NTS

FILE PATH: ACADDWGS\PROCESS\PACVMV\PACVMV240\DUAL\460\CABINET\240TON_8C

DWG# C1-A

AIR HANDLING UNIT (AHU-1)

BY

MANUFACTURER

MAFNA

SUPPLY FAN

UNIT	AIR FLOW			MOTOR				SOUND POWER OUTLET									FLA	MCA	MOCP	WEIGHT	UNIT MFG	Model #
	CFM	ESP	TSP	BHP	HP	RPM	VOLTS	1	2	3	4	5	6	7	8	LWA	AMPS	AMPS	AMPS	LBS		
AHU-1	19,875	2.8	6.13	1x25.85	40	1200	208	91	94	102	101	91	89	82	74	100	201.5	251.8	352.6	33,000	MAFNA	ER-SW-13SA
AHU-2	20,320	2.8	6.0	1x26.64	40	1200	208	91	92	101	106	97	94	89	79	105	218	272.5	381.5	33,000		ER-SW-20SA
AHU-3	7,565	2.0	4.63	1x8.13	15	1800	208	86	86	98	96	91	88	84	76	97	70	87.5	122.5	8,000		ER-SW-7SA
AHU-4	10,100	2.0	5.22	1x11.79	15	1800	208	88	88	97	94	89	86	83	80	96	79.75	99.7	139.6	14,500		ER-SW-10SA

RETURN FAN

UNIT	AIR FLOW			MOTOR				SOUND POWER INLET								
	CFM	ESP	TSP	BHP	HP	RPM	VOLTS	1	2	3	4	5	6	7	8	LWA
AHU-1	19,875	1.5	4.1	1x17.69	20	1200	208	88	91	102	99	92	89	81	72	99
AHU-2	20,320	1.5	4.02	1x17.88	25	1200	208	88	90	102	99	92	89	81	72	99
AHU-3	7,565	1.5	2.45	1x4.24	7.5	1800	208	81	84	89	88	82	79	77	71	89
AHU-4	9,000	1.5	2.88	1x6.1	10	1200	208	83	86	91	90	85	82	80	75	91

COOLING COIL

UNIT	AIR					FLUID					CAPACITY (MBH)	
	CFM	EAT		LAT		APD (IN WC)	TYPE	EWT	LWT	GPM	WPD (FT)		
		FDB	FWB	FDB	FWB			F	F		Ft H2O	TOTAL	SENSIBLE
AHU-1	19,875	79.4	66.8	53.8	53.37	0.98	30%PG	45	55.14	170.1	19.37	816	565
AHU-2	20,320	79.2	66.4	54.2	53.48	0.76	30%PG	45	55	166.3	39.07	787	556
AHU-3	7,565	79.4	66.9	51.72	51.46	1.08	30%PG	45	55.05	72.95	17.1	347	229
AHU-4	10,100	78.3	66.7	51.8	51.55	1.06	30%PG	45	55	95.96	17.43	454	293

HEATING COIL

UNIT	AIR				FLUID					TOTAL MBH
	CFM	EAT	LAT	APD (IN WC)	TYPE	EWT	LWT	GPM	WPD (FT)	
		FDB	FDB			F	F		Ft H2O	
AHU-1	19,875	69.7	90.66	0.13	30%PG	155	115	22.9	2.21	451.8
AHU-2	20,320	69.7	90.09	0.11	30%PG	155	115	14.81	0.99	289
AHU-3	7,565	69.7	92.28	0.11	30%PG	155	114.5	9.58	3.52	186.5
AHU-4	10,100	69.7	93.07	0.11	30%PG	155	113.1	12.78	6.97	256

ENERGY RECOVERY WHEEL

UNIT	WINTER SUPPLY					WINTER EXHAUST					APD (IN WC)	TOTAL MBH	EFF %	SUMMER SUPPLY					SUMMER EXHAUST					APD (IN WC)	TOTAL MBH	EFF %
	CFM	EAT		LAT		CFM	EAT		LAT					CFM	EAT		LAT		CFM	EAT		LAT				
		FDB	FWB	FDB	FWB		FDB	FWB	FDB	FWB					FDB	FWB	FDB	FWB		FDB	FWB	FDB	FWB			
AHU-1	6,210	11	11	59.5	51	6,210	78.3	62.3	27.8	27.8	0.7	0.72	73	6,210	89	73	69.7	64.5	6,210	62.2	59.9	81.5	69.2	0.7	189	68
AHU-2	5,775	11	11	49.2	49.2	5775	62.1	59.8	23.9	23.9	0.65	410	71	5,775	89	73	66.2	72.9	5775	78.2	62.3	86.1	69.6	0.65	146	66
AHU-3	-	-	-	-	-	-	-	-	-	-	-	-	-	-	-	-	-	-	-	-	-	-	-	-	-	-
AHU-4	3,000	11	11	44.5	37.6	1900	70	52.9	17	16.9	0.58	135	89	3,000	89	73	81.4	67.8	1,900	75	62.6	86.9	71.4	0.58	594	83.8

SENSIBLE WHEEL

UNIT	WINTER SUPPLY					WINTER EXHAUST					APD (IN WC)	TOTAL MBH	EFF %	SUMMER SUPPLY					SUMMER EXHAUST					APD (IN WC)	TOTAL MBH	EFF %
	CFM	EAT		LAT		CFM	EAT		LAT					CFM	EAT		LAT		CFM	EAT		LAT				
		FDB	FWB	FDB	FWB		FDB	FWB	FDB	FWB					FDB	FWB	FDB	FWB		FDB	FWB	FDB	FWB			
AHU-1	19,875	90	72	76.5	68.5	19,875	69.2	59	82.7	63.8	0.92	289	65	19,875	55	54	68.6	59	19,875	75.8	64.6	62.2	59.9	0.92	290	66
AHU-2	20,320	90	72	76.5	68.6	20,320	69.2	59	82.7	63.8	0.92	289	65	20,320	55	54	68.5	59	20,320	75.8	64.6	62.3	59.9	0.92	294	65
AHU-3	-	-	-	-	-	-	-	-	-	-	-	-	-		-	-	-	-	-	-	-	-	-	-	-	-
AHU-4	-	-	-	-	-	-	-	-	-	-	-	-	-		-	-	-	-	-	-	-	-	-	-	-	-

PREFILTERS / SECONDARY

UNIT	PREFILTERS Type	Thickness	MERV	HxW	Qty	SECONDARY Type	Thickness	MERV	HxW	Qty
AHU-1	Pleated	2"	8	24x24	12	Pleated	12"	13	24x24	4
AHU-2	Pleated	2"	8	24x24	12	Pleated	12"	13	24x24	4
AHU-3	Pleated	2"	8	24x24	8	Pleated	12"	13	24x24	4
AHU-4	Pleated	2"	8	24x24	6	Pleated	12"	13	24x24	2
				12x24	2				12x24	0

NOTE: UNIT TO EQUIPED WITH ABB VFD, MARINE LIGHT AND AFMS.

Pressure Drop Calculations

Unit	inches w.g. AHU-1 Supply	AHU-1 Return	inches w.g. AHU-2 Supply	AHU-2 Return	inches w.g. AHU-3 Supply	AHU-3 Return	inches w.g. AHU-4 Supply	AHU-4 Return
Damper	0.05	0.05	0.05	0.05	0.05	0.05	0.05	0.05
Recirculation Damper	0.05	-	0.05	-	0.05	-	0.05	-
Pre-Filter	0.75	0.75	0.75	0.75	0.75	0.75	0.75	0.75
Final-Filter	1	-	1	-	1	-	1	-
Heating Coil	0.13	-	0.08	-	0.13	-	0.11	-
Cooling Coil	0.98	-	0.76	-	1.05	-	1.06	-
Enthalpy Wheel	0.7	0.75	0.65	0.7	-	-	0.6	0.43
Sensible Wheel	0.92	1.02	0.94	1.02	-	-	-	-
Internal Static Pressure	4.58	2.57	4.28	2.52	3.03	0.8	3.62	1.23
External Static Pressure Required	1.5	1.5	1.5	1.5	1.5	1.5	1.5	1.5
Total Static Pressure	6.08	4.07	5.78	4.02	4.53	2.3	5.12	2.73
Designed Static Pressure	6.13	4.1	6	4.02	4.63	2.45	5.22	2.88

OUTER CASING	18Ga SATIN COATED	BASE	C6 CHANNEL	PANEL	2" THICK 3.0 LBS/CUTT FIBERGLASS INSULATION
INNER CASING	20Ga SOLID G90	UNDERSIDE FLOOR	20Ga SOLID G90 4" TK, 3/4 LBS/CUFT FIBERGLASS INSULATION	FLOOR	14Ga STEEL CHECKERED PLATE

PRELIMINARY DRAWING
AHU-1 (19,875 CFM)

All dimension in inches

Estimated Weight - 31,500 lbs

AHU-1 19,875 CFM	
A	2" MERV-8 & 12" MERV13 FILTER
B	Energy Recovery Wheel
C	Heating Coil
D	Cooling Coil
E	Supply Plenum Fan 19,875 CFM @ 6.13" TSP
F	Sensible Wheel
G	2" MERV-8 FILTER FOR RETURN FAN
H	Exhaust Plenum Fan 19,875 CFM @ 4.07" TSP

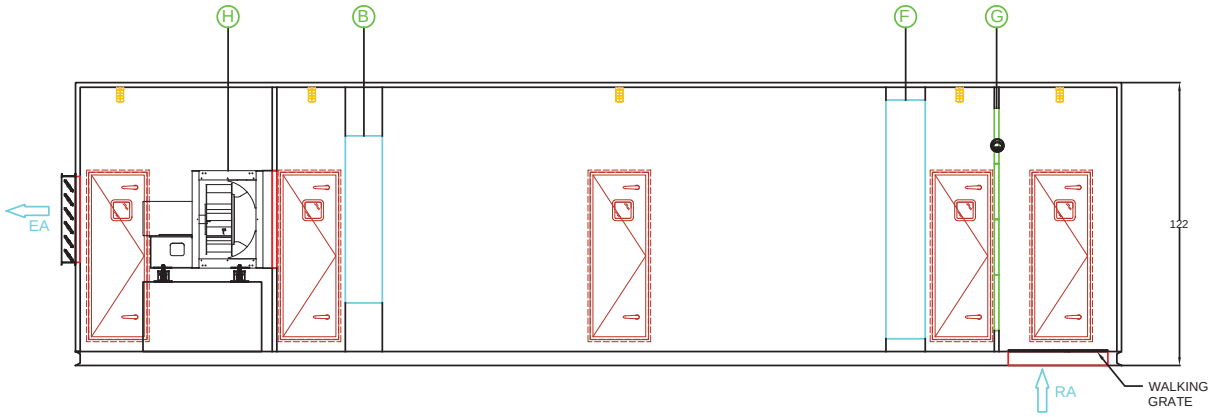

REAR ELEVATION

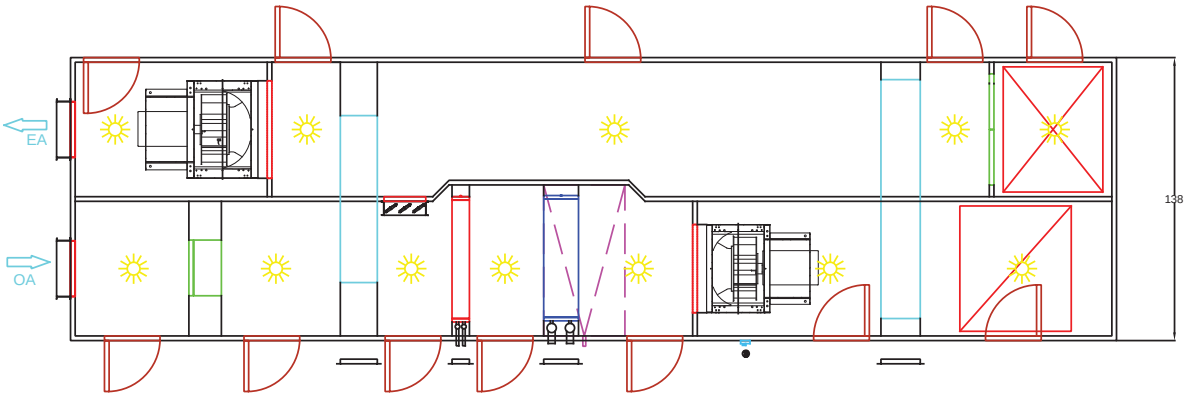

PLAN

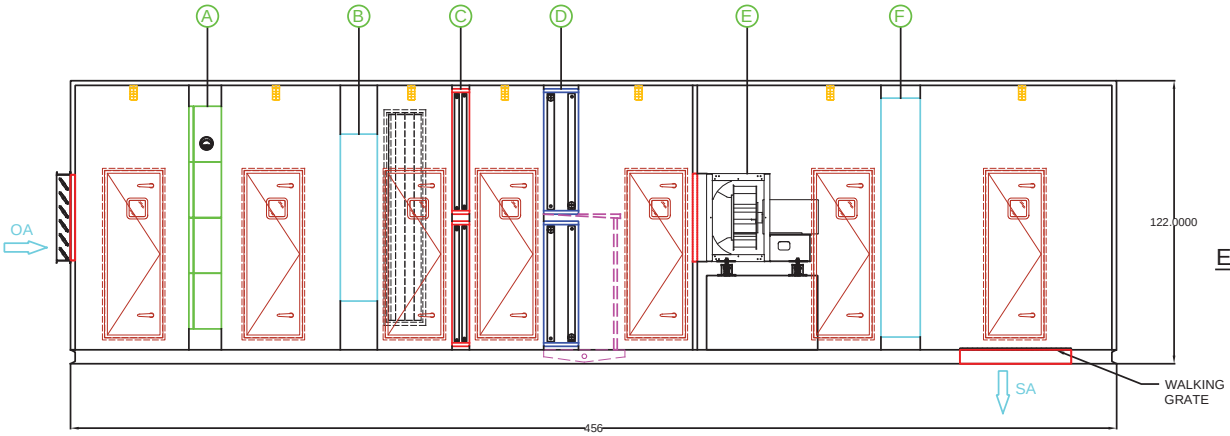

FRONT ELEVATION

This is just Preliminary drawing and subjected to change.
Drawings not to scale.

Legend:
Lighting Fixture
Lighting Switch
Magnehelic Gage
Receptacle
Removable panel

MAFNA AIR TECHNOLOGIES INC. 475 SHELDON DRIVE, ONTARIO, ON, CANADA, N1T 2B7 (T) 519-624-4622 (F) 519-462-9854		This document contains confidential information proprietary to Mafna Air Technologies Inc. No portion may be produced or disclosed to others, used in any way, except as authorized in writing by Mafna Air Technologies Inc.	Engineer		Page No.		TAG	AHU-1
Capacity	19,875 CFM @ 6.13" TSP		Project		Dwg. Date	06/15/2018	DWG TAG	

OUTER CASING	18Ga SATIN COATED	BASE	C6 CHANNEL	PANEL	2" THICK 3.0 LBS/CUTT FIBERGLASS INSULATION
INNER CASING	20Ga SOLID G90	UNDERSIDE FLOOR	20Ga SOLID G90 4" TK, 3/4 LBS/CUFT FIBERGLASS INSULATION	FLOOR	14Ga STEEL CHECKERED PLATE

PRELIMINARY DRAWING
AHU-2 (20,320 CFM)

All dimension in inches

Estimated Weight - 31,500 lbs

AHU-2 20,320 CFM	
A	2" MERV-8 & 12" MERV13 FILTER
B	Energy Recovery Wheel
C	Heating Coil
D	Cooling Coil
E	Supply Plenum Fan 20,320 CFM @ 6" TSP
F	Sensible Wheel
G	2" MERV-8 FILTER FOR RETURN FAN
H	Exhaust Plenum Fan 20,320 CFM @ 4.02" TSP

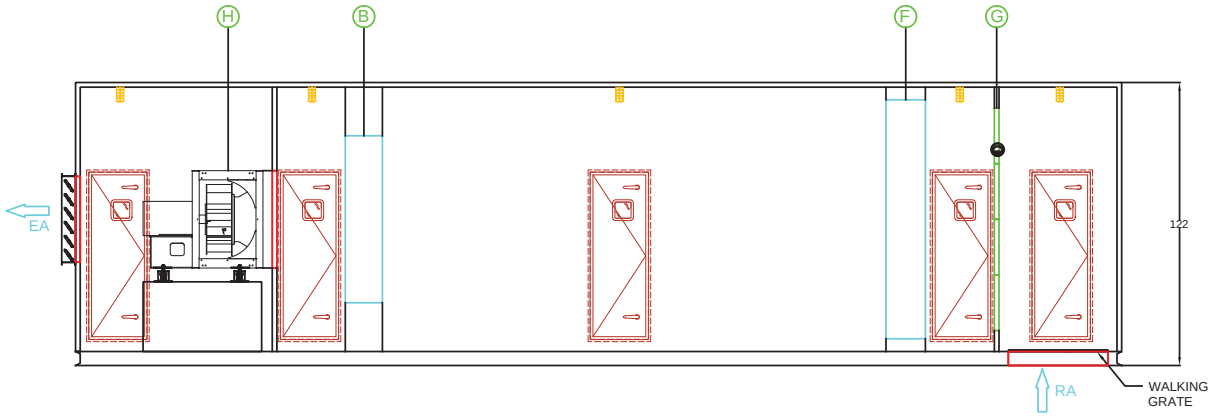

REAR ELEVATION

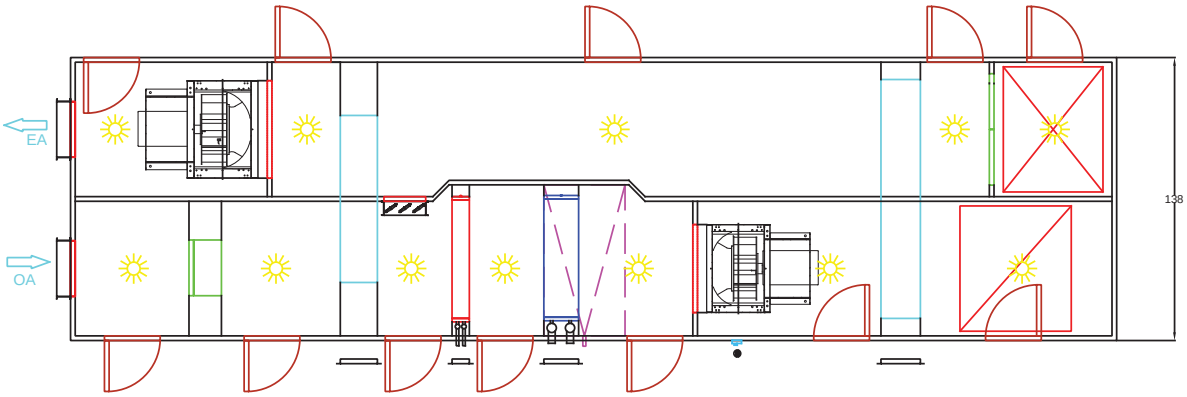

PLAN

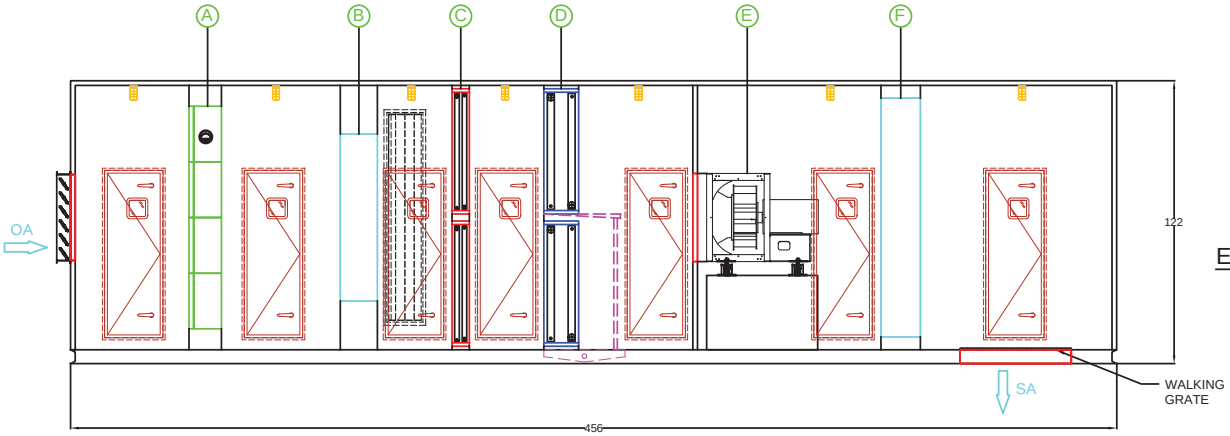

FRONT ELEVATION

This is just Preliminary drawing and subjected to change.
Drawings not to scale.

Legend:
Lighting Fixture
Lighting Switch
Magnehelic Gage
Receptacle
Removable panel

MAFNA AIR TECHNOLOGIES INC. 475 SHELDON DRIVE, ONTARIO, ON, CANADA, N1T 2B7 (T) 519-624-4622 (F) :519-462-9854		This document contains confidential information proprietary to Mafna Air Technologies Inc. No portion may be produced or disclosed to others, used in any way, except as authorized in writing by Mafna Air Technologies Inc.	Engineer		Page No.		TAG	AHU-2
Capacity	20,320 CFM @ 6" TSP		Project		Dwg. Date	06/15/2018	DWG TAG	

OUTER CASING	18Ga SATIN COATED	BASE	C6 CHANNEL	PANEL	2" THICK 3.0 LBS/CUTT FIBERGLASS INSULATION
INNER CASING	20Ga SOLID G90	UNDERSIDE FLOOR	20Ga SOLID G90 4" TK, 3/4 LBS/CUFT FIBERGLASS INSULATION	FLOOR	14Ga STEEL CHECKERED PLATE

PRELIMINARY DRAWING
AHU-3 (7,565 CFM)

All dimension in inches

Estimated Weight - 9,500 lbs

AHU-3 7,565 CFM	
A	2" MERV-8 & 12" MERV-13 FILTER
B	Hot Water Coil
C	Chilled Water Coil
D	Supply Plenum Fan 7,565CFM @ 4.63" TSP
E	2" MERV-8 for Return Air
F	Return Plenum Fan 7,565 CFM @ 2.45" TSP

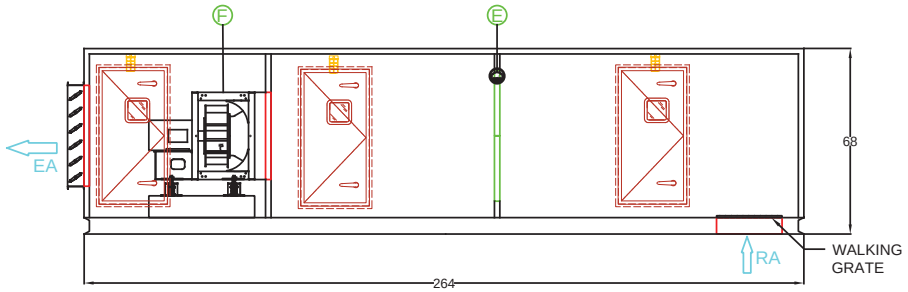

REAR ELEVATION

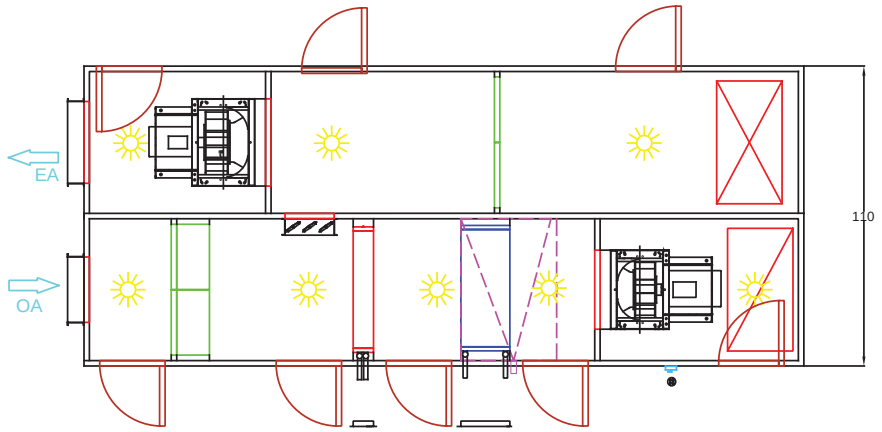

PLAN

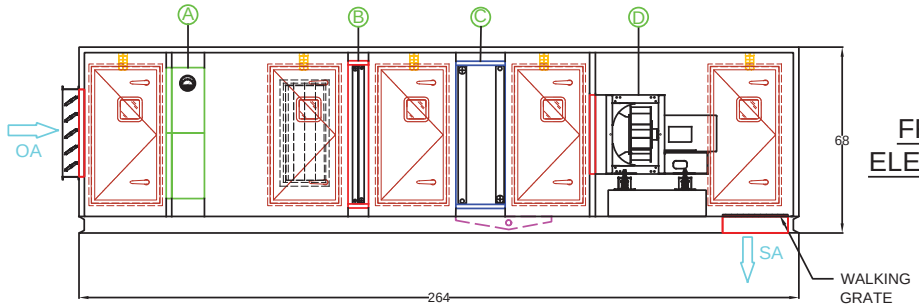

FRONT ELEVATION

This is just Preliminary drawing and subjected to change.

Legend:
Lighting Fixture
Magnahelic Gage
Removable panel
Lighting Switch
Receptacle

MAFNA AIR TECHNOLOGIES INC.
475 SHELDON DRIVE, ONTARIO, ON, CANADA, N1T 2B7
(T) 519-624-4622 (F) :519-462-9854

This document contains confiential information proprietary to Mafna Air Technologies Inc. No portion may be produced or disclosed to others, used in any way, except as authorized in writing by Mafna Air Technologies Inc.

Engineer		Page No.		TAG	AHU-3		
Project		Dwg. Date	03/21/2018	DWG TAG			
Capacity	7,565 CFM @ 4.63" TSP						

OUTER CASING	18Ga SATIN COATED	BASE	C6 CHANNEL	PANEL	2" THICK 3.0 LBS/CUTT FIBERGLASS INSULATION
INNER CASING	20Ga SOLID G90	UNDERSIDE FLOOR	20Ga SOLID G90 4" TK, 3/4 LBS/CUFT FIBERGLASS INSULATION	FLOOR	14Ga STEEL CHECKERED PLATE

PRELIMINARY DRAWING
AHU-4 (10,100 CFM)

All dimension in inches

Estimated Weight - 14,500 lbs

AHU-4 10,100 CFM	
A	2" MERV 8 & 12" MERV 13 FILTER
B	Energy Recovery Wheel
C	Heating Coil
D	Cooling Coil
E	Supply Plenum Fan 10,100 CFM @ 5.22" TSP
F	2" MERV-8 for Return Air
G	Exhaust Plenum Fan 9,000 CFM @ 2.88" TSP

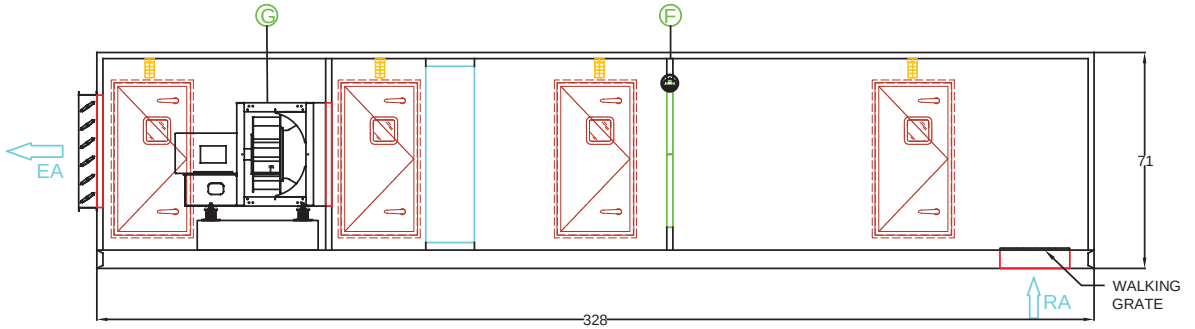

REAR ELEVATION

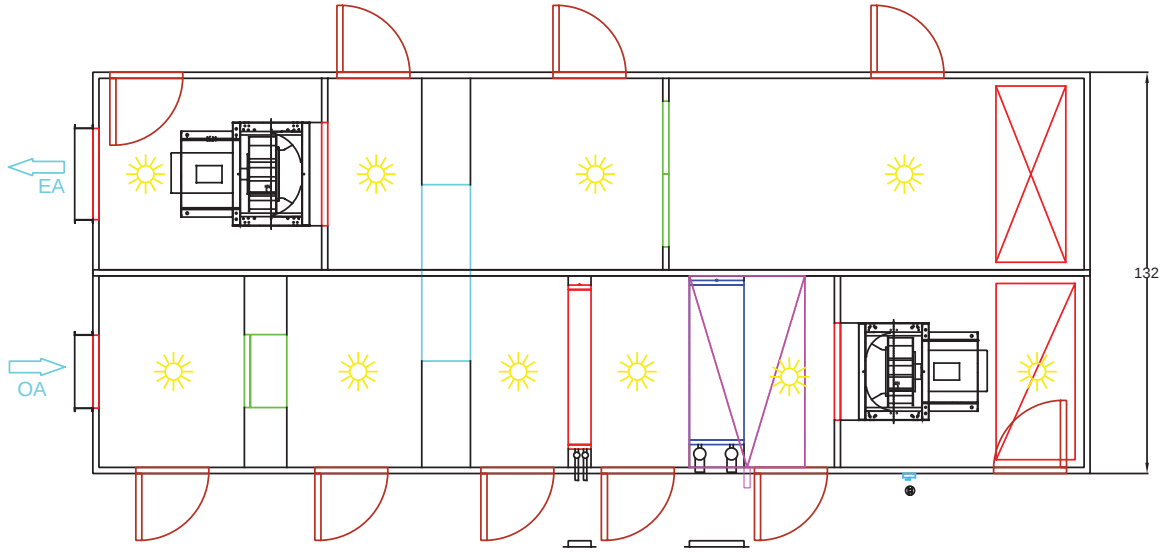

PLAN

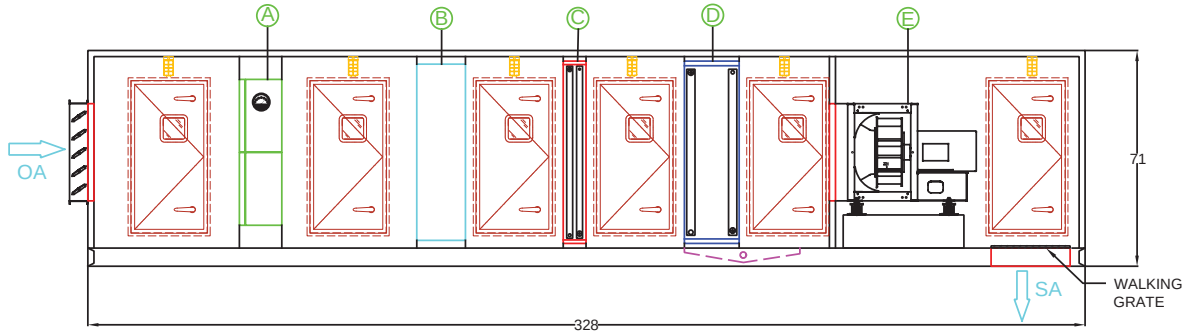

FRONT ELEVATION

This is just Preliminary drawing and subjected to change.

Legend:
Lighting Fixture
Lighting Switch
Magnehelic Gage
Receptacle
Removable panel

MAFNA AIR TECHNOLOGIES INC. 475 SHELDON DRIVE, ONTARIO, ON, CANADA, N1T 2B7 (T) 519-624-4622 (F) :519-462-9854	This document contains confiential information proprietary to Mafna Air Technologies Inc. No portion may be produced or disclosed to others, used in any way, except as authorized in writing by Mafna Air Technologies Inc.	Engineer		Page No.		TAG	AHU-4
10,100 CFM @ 4.22" TSP		Project		Dwg. Date	03/21/2018	DWG TAG	

BOILER (B-1& 2)

BY

MANUFACTURER

VIESSMANN

Technical Data Manual

Model Nos. and pricing : See Price List

VITOCROSSAL 200

Gas-fired Condensing Boiler
1445 to 2245 MBH (423 to 658 kW)

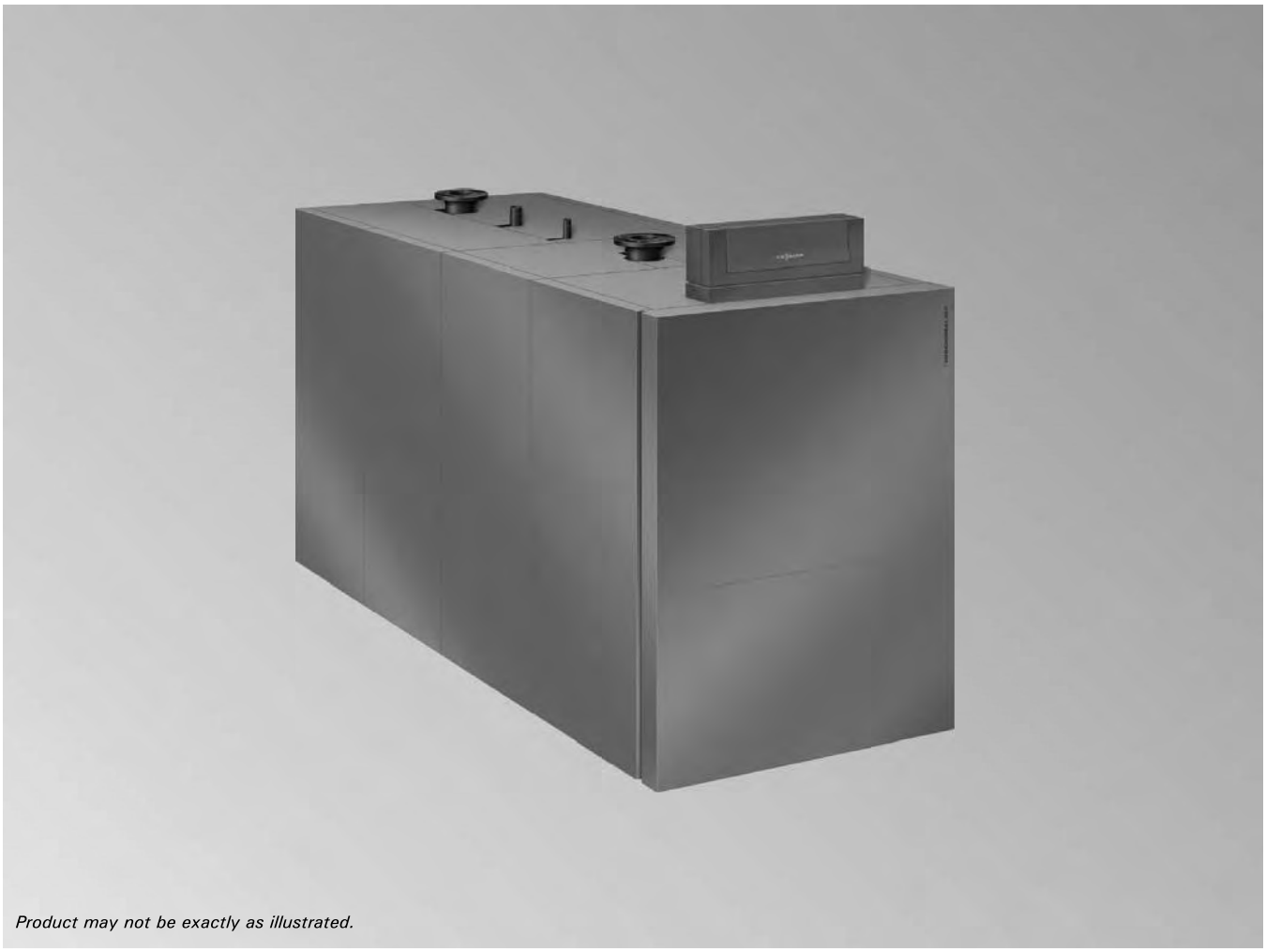

Product may not be exactly as illustrated.

Vitocrossal 200
CM2 Series 400, 500, 620 and 620 TX

High efficiency, gas-fired condensing boiler
with pre-mix modulating cylinder burner
for natural gas or liquid propane gas with Inox-Crossal heat exchanger made of high-grade SA 240-316 Ti stainless steel.
For operation without low limit on boiler return water temperature.
For closed loop hot water heating systems with maximum supply water temperatures of 210° F (99° C) for a maximum operating pressure of 75 psig.

Heating input: 1445 to 2245 MBH
(423 to 658 kW)

Vitocrossal 200

Benefits at a glance:

- Inox-Crossal heat exc anger surface made of igh-grade SA 240-316 Ti stainless steel for ig operational reliability and long service life.
  - Easy dispersal of condensate throug vertical gas flues; therefore no concentration of condensate.
  - Increased self-cleaning effect throug smoot stainless steel surfaces.
- Highly efficient heat transfer and high condensation rate t rough
  - highly turbulent flow of flue gas throug t e eat exchanger.
  - boiler water and hot gases flowing in counter flow.
- Efficiency up to 98% through intensive condensation. The flue gas temperature is only approximately 9-27° F (5 - 15° C) above boiler return temperature (see chart below).
- Clean combustion - through perfect matc of burner and boiler, low combustion chamber loading and straig t-through combustion chamber.
- Easy andling in boiler rooms through particularly low build eight and weight.
- Easy installation and elimination of wiring mistakes with Viessmann pre-wired plug-in system.
- Heating boiler, heating system control, domestic hot water storage tank and all other Viessmann system technology components are coordinated to one another.
  All components are design-matched for quick installation.
- Pre-mix cylinder burner for environmentally-friendly operation with a modulation range from 20 to 100%.
- All hydronic connections can be fitted from above.
- Economical and safe heating system operation through Vitotronic digital control system with communication capability. Tailored to every need, covering all known control strategies and applications.
  Standard LON BUS for complete integration into building management systems.
- Particularly quiet operation.
- High altitude operation up to 10,000 ft. (3000 m) with a simple electronic adjustment.

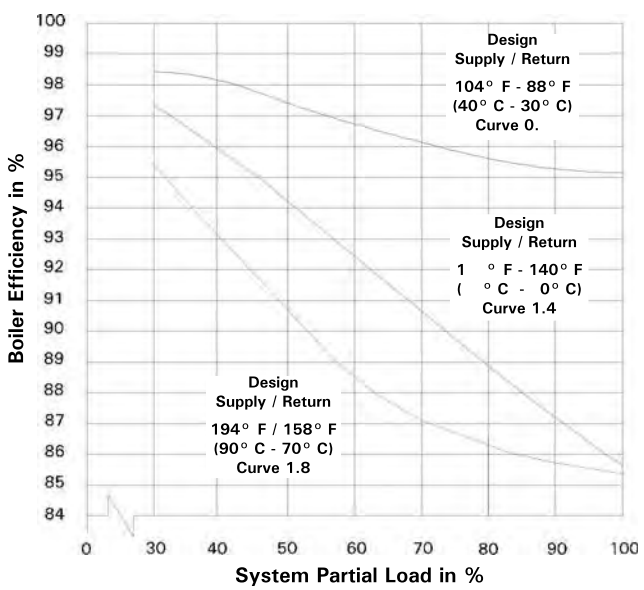

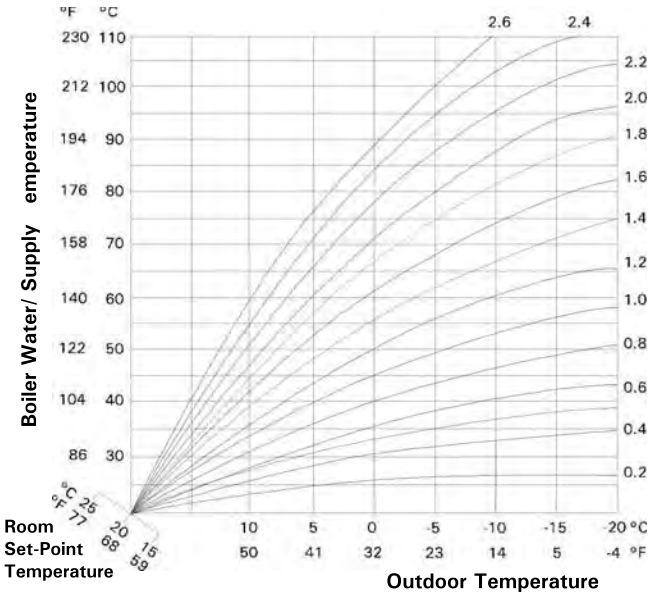

Vitocrossal 200 boiler efficiency dependent on system heating water return temperatures and load conditions

Cutaway Section

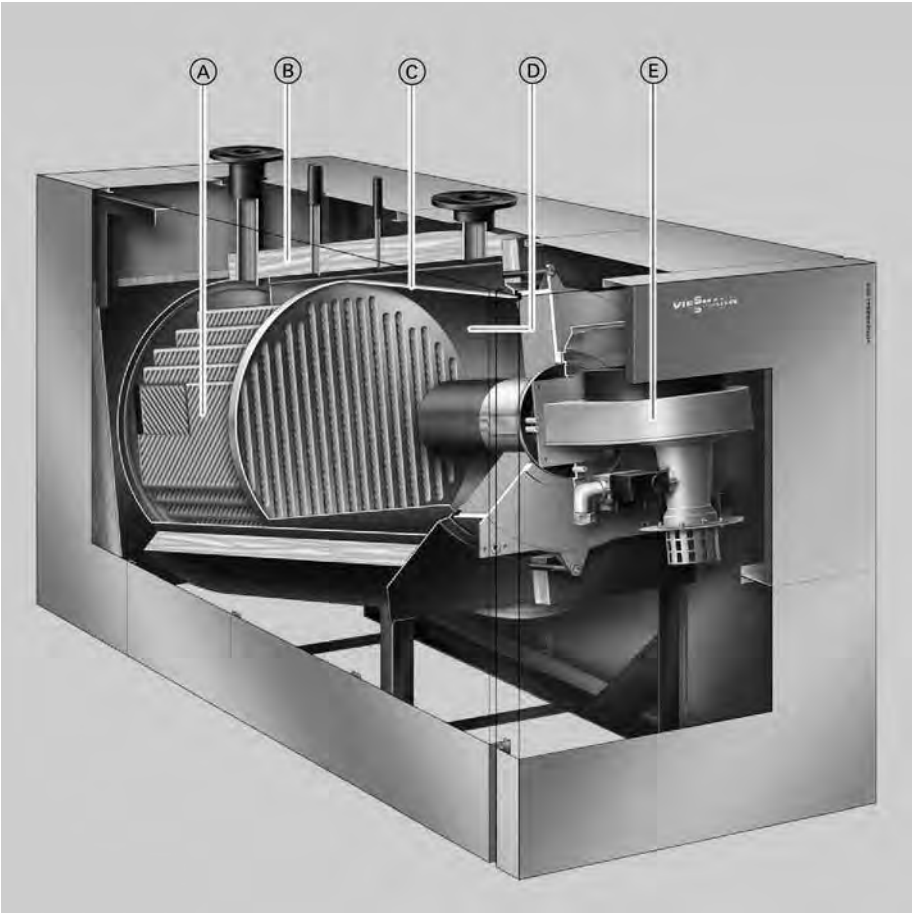

Legend

Ⓐ St inless teel Inox-Cros a he t exchanger
Ⓑ Highly effective thermal insulation
Ⓒ Water-cooled stainless steel combustion chamber
Ⓓ Wide water passageway - good natural circulation
Ⓔ Modulating MatriX cylinder burner

Technical Data

Boiler Model	CM2	400	500	620	620 TX
Input	MBH	1445	1800	2245	1999*3
	(kW)	(423)	(527)	(658)	(585)
Minimum Input NG	MBH	287	358	450	450
	(kW)	(84)	(105)	(132)	(132)
Minimum Input LPG	MBH	351	440	545	545
	(kW)	(103)	(129)	(160)	(160)
Output*1	MBH	1372	1710	2132	1899*2
	(kW)	(402)	(501)	(625)	(556)
Net AHRI rating	MBH	1193	1487	1854	1651
	(kW)	(350)	(436)	(543)	(484)
Combustion efficiency*1	%	95.1	95.1	95.1	95.1*2
Thermal efficiency*1	%	95.0	95.0	95.0	95.0*2
Overall length(e)	in.	89½	95⅝	100⅞	100⅞
	(mm)	(2273)	(2429)	(2562)	(2562)
Overall width (c)	in.	42⅜	42⅜	44⅜	44⅜
(including insulation)	(mm)	(1078)	(1078)	(1128)	(1128)
Overall height (a)	in.	65⅝	65⅝	68¾	68¾
(including control unit)*4	(mm)	(1666)	(1666)	(1748)	(1748)
Concrete boiler base					
Length	in.	46⅝	53	58	58
	(mm)	(1185)	(1345)	(1475)	(1475)
Wi th	in.	42.5	42.5	44.5	44.5
	(mm)	(1245)	(1245)	(1295)	(1295)
Thickness	in.	4	4	4	4
	(mm)	(100)	(100)	(100)	(100)
Weight					
B iler body	lb	1136	1257	1488	1488
	(Kg)	(515)	(570)	(675)	(675)
C mplete with the burner, control	lb	1495	1662	1929	1929
an thermal insulation	(Kg)	(678)	(754)	(875)	(875)

*1 Tested to U.S. Standards ANSI Z21.13/CSA 4.9 an AH I, BTS-2000 Testing Standard Meth d to determine the efficiency of Commercial Heating Boilers.
*2 Tested to U.S. Standards ANSI Z21.13/CSA 4.9.
*3 B ilers with this maximum input rating is only offere in the USA.
*4 A d 1⅝ in. (40 mm) when using seismic mounts (opti nal accessory).

Note: F r altitude operation up to 4,999 feet, erate the input capacity by 3%/1000 ft.
F r operation from 5,000 to 10,000 feet, with the electronic altitu e adjustment made, derate the input capacity by an ad iti nal 0.6%/1000 ft. for a total erate of 18%.

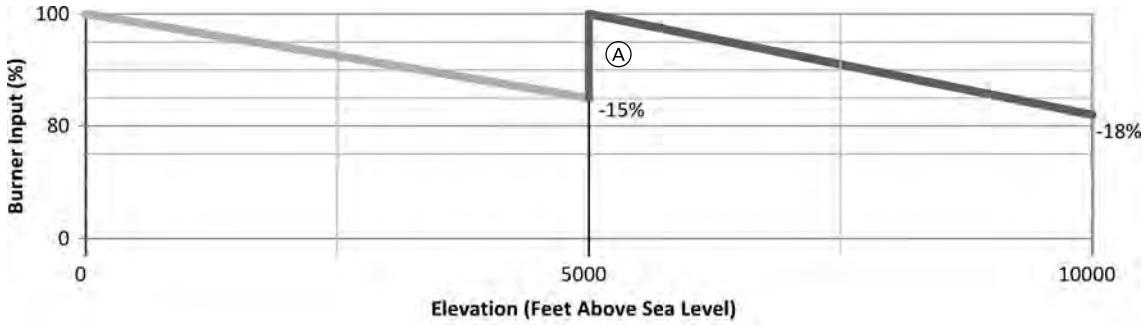

Ⓐ nput capacity after electronic altitude adjustment is ma e.

5773 596 - 03

Technical Data *(continued)*

Boiler Model	CM2	400	500	620	620 TX
Boiler Water Content	USG	104	112	131	131
	(L)	(395)	(425)	(495)	(495)
Heat exchanger surface	ft.^{2}	166.6	208.6	234	234
water cooled	(m^2)	(15.5)	(19.4)	(21.7)	(21.7)
Maximum Operating Temperature	°F (°C)	210 (99)	210 (99)	210 (99)	210 (99)
Maximum Adjustable High Limit	°F (°C)	203 (95)	203 (95)	203 (95)	203 (95)
Maximum Operating Pressure	psig	75	75	75	75
	(bar)	(5)	(5)	(5)	(5)
Boiler Connections					
Boiler supply and return (BS), (BR) (ANSI flanges)	in.	4	4	4	4
	(mm)	(100)	(100)	(100)	(100)
Safety Supply	in.	1¼	1¼	1¼	1¼
Boiler Drain	in.	1½	1½	1½	1½
Condensate Drain	in.	¾	¾	¾	¾
Vent pipe					
Internal Diameter	in.	10	10	10	10
	(mm)	(252)	(252)	(252)	(252)
Flue Gas Values					
temperature (at a return temperature of 86° F (30° C)					
at rated input	°F	113	113	113	113
	(°C)	(45)	(45)	(45)	(45)
at partial load	°F	86	86	86	86
	(°C)	(30)	(30)	(30)	(30)
Temperature (at a return temperature of 140° F (60° C)					
at rated input	°F	167	167	167	167
	(°C)	(75)	(75)	(75)	(75)
Mass flow rate (of flue gas)					
at rated input	lbs/h	1276	1587	1986	1767
	(kg/h)	(579)	(720)	(901)	(802)
at partial load	lbs/h	255	317	399	399
	(kg/h)	(116)	(144)	(181)	(181)
Pressure					
at boiler flue outlet	pa	70	70	70	70
at rated input	"w.c.	0.28	0.28	0.28	0.28
Standby loss					
at maximun input and steady state condition 180° F/80° F (82° C/27° C) supply and return water temperature	BTU/h (W)	1878 (550)	2520 (738)	3367 (986)	3367 (986)
	%	0.13	0.14	0.15	0.15
At boiler water temperature 158° F (70° C) [room temperature 68° F (20° C)]	BTU/h (W)	335 (1270)	5400 (1580)	6735 (1973)	6735 (1973)
	%	0.3	0.3	0.3	0.3

Dimensions

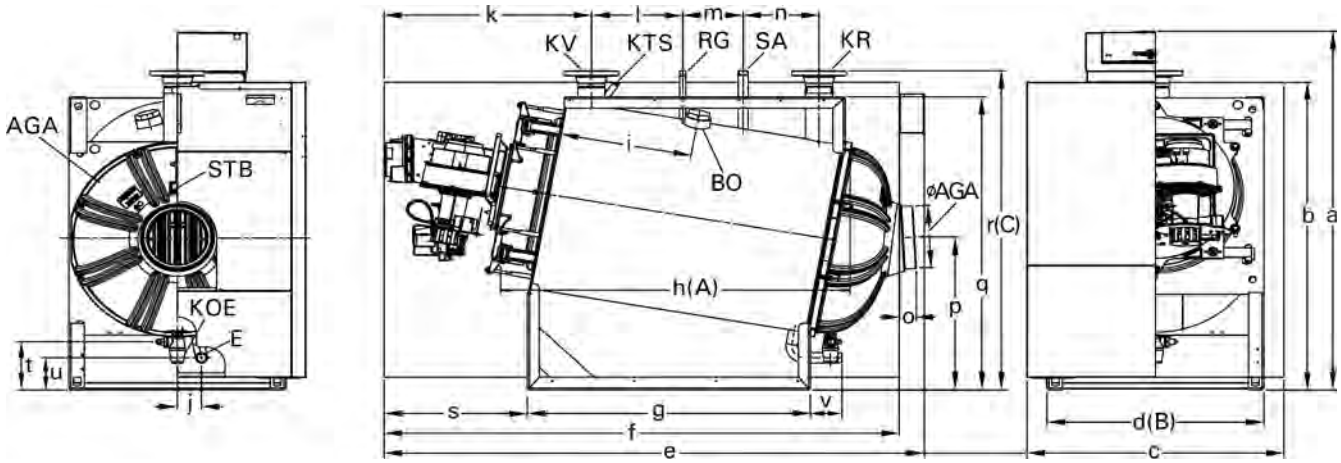

Legend

A Boi er Length
B Boi er Width
Boi er Height
AGA F ue outlet
BO Inspection Opening (Canada only)
E Dr in
KOA ondensate drain
KTS Boi er water temperature sensor
KR Boiler return
KV Boiler flow
RG Female connection R½ or dditional control equipment (e.g. fitting assembly with minimum and maximum pressure switch)
SA safety connection (safety v lve)
STB Flue outlet

Dimensions

Model CM2		400	500	620	620 TX
*	in. (mm)	65 5/8 (1666)	65 5/8 (1666)	68¾ (1748)	68¾ (1748)
b*	in. (mm)	56¼ (1428)	56¼ (14 8)	59½ (1511)	59½ (1511)
c	in. (mm)	42 3/8 (1078)	42 3/8 (1078)	44 3/8 (1128)	44 3/8 (1128)
d = B	in. (mm)	35¾ (910)	35¾ (910)	37¾ (960)	37¾ (960)
e	in. (mm)	89½ (2273)	95 5/8 (24 9)	100 7/8 (2562)	100 7/8 (2562)
	in. (mm)	85¼ (2163)	85¼ (2319)	96¾ (2455)	96¾ (2455)
g	in. (mm)	46¾ (1187)	52 7/8 (1343)	58¼ (1477)	58¼ (1477)
h = A	in. (mm)	59 (1497)	65 (1650)	70 3/8 (1787)	70 3/8 (1787)
i	in. (mm)	21 7/8 (555)	28¾ (713)	33½ (851)	33½ (851)
j = BO	in. (mm)	4 (101)	4 (101)	4 (101)	4 (101)
k	in. (mm)	34¼ (870)	34¼ (870)	34 5/8 (879)	34 5/8 (879)
	in. (mm)	15⅛ (83)	12¾ (435)	18 7/8 (480)	18 7/8 (480)
m	in. (mm)	10 (254)	12⅛ (308)	13¾ (351)	13¾ (351)
n	in. (mm)	12½ (318)	14 5/8 (370)	16 3/8(415)	16 3/8(415)
o	in. (mm)	2¾ (70)	2¾ (70)	2 5/8 (67)	2 5/8 (67)
p*	in. (mm)	27 7/8 (708)	27 7/8 (708)	29 (736)	29 (736)
q*	in. (mm)	53½ (1360)	54 5/8 (1387)	57½ (1460)	57½ (1460)
r = C*	in. (mm)	58 3/8 (148)	59 3/8 (1509)	62¼ (1582)	62¼ (1582)
s	in. (mm)	23¾ (601)	23¾ (601)	23¾ (601)	23¾ (601)
t*	in. (mm)	9 (229)	9 (229)	9 (229)	9 (229)
u*	in. (mm)	5 7/8 (149)	5 7/8 (149)	5 7/8 (149)	5 7/8 (149)
v	in. (mm)	5¼ (133)	5¼ (133)	5¼ (133)	5¼ (133)

* Add 1⅝ in. (40 mm) when using seismic mounts (optional accessory).

Recommended Minimum Service Clearances

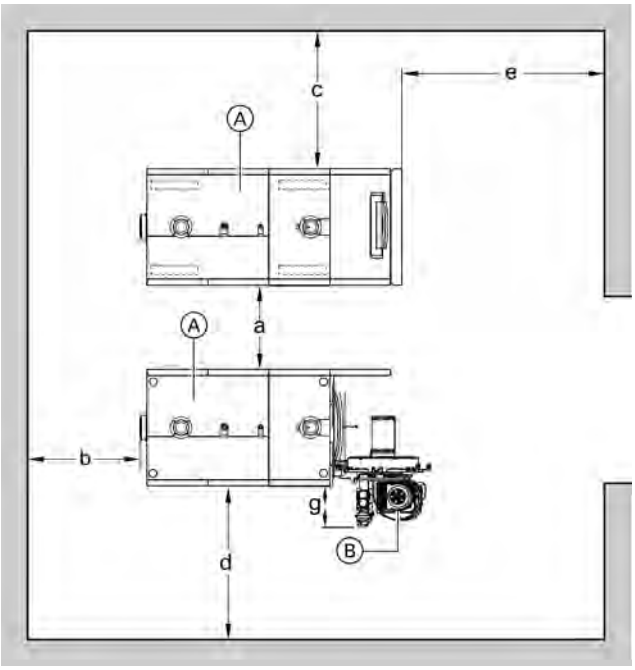

Legend

Ⓐ Boiler

Ⓑ Burner

*1 Clearance may be reduced to zero in multi-boiler installations, provided the side panel removal is not required.
Note: The burner, boiler control conden ate trap, venting and heat exchanger are still fully accessible from the front and rear of the boiler.

*2 Clearance for vent pipe instal ation.

To en b e convenient in t tion nd mainten nce ob erve the t ted c e r nce dimen ion . Maint in the minimum c e r nce where p ce i tight.

In the de ivered condition the boi er door hinge br cket i f ctory in t ed on the eft ide of the door. If required the boi er door hinge br cket c n be rein t ed on the right ide of the door.

CM2	400	500	620/620 TX
*1 in. (mm)	20 (500)	20 (500)	20 (500)
b *2 in. (mm)	30 (60)	30 (60)	30 (60)
c in. (mm)	20 (500)	20 (500)	20 (500)
d in. (mm)	20 (500)	20 (500)	20 (500)
e in. (mm)	24 (600)	24 (600)	24 (600)
f in. (mm)	11 (280)	11 (280)	11 (280)
g in. (mm)	15½ (395)	15½ (395)	15½ (395)

Mechanical room

- Avoid ir cont min tion by h ogen ted hydroc rbon (e.g. in pr y p int o vent nd c e ning gent)
- Avoid very du ty condition
- Avoid high eve of humidity
- Protect g in t fro t nd en ure good venti tion otherwi e the y tem may uffer f u t nd d mage. In rooms where ir cont min tion from h ogen ted hydroc rbon i to be expected oper te the boi er on y in b nced f ue mode.

Minimum clearances to combustibles

Boiler model CM2	400	500	620	620 TX
Top	0			
Sides	0			
Flue	As per vent manuf cturer' pecific tion			
Front	0			
Floor	combu tib e			

Standard Equipment

B iler b dy with fitted mating ANSI flanges and gaskets t all c nnect rs and fitted pr tective crate, plus flue gas c llect r c llar.

M2 Boiler model	400	500	620	620 TX
Thermal insulati n	2	2	2	2
Cylinder burner	1	1	1	1
B iler c ntr l unit (see b iler c ntr l alternatives bel w)	1	1	1	1
B iler c ding card	1	1	1	1
Technical d cumentati n	2	2	2	2
C mbusti n air intake kit	1	1	1	1
Juncti n b x	1	1	1	1

Installation fittings for standard equipment includes:

- l w water cut- ff
- safety header (c/w 75 psig pressure relief valve, air vent and pressure gage)
- drain valve
- pr duct d cumentati n
- c mbusti n air intake kit
- NG t LPG c nversi n kit

Boiler Accessories

- Mot rized flue gas damper (f r cascade venting system)

Refer to the common venting flue vent damper Installation Instructions.

Boiler ontrol Alternatives

For single-boiler or multiple-boiler installations

Cust m c ntr l panels f r residential r c mmercial applicati ns are designed and manufactured by Viessmann t suit any cust mer's specific requirements. Cust m c ntr l panels can integrate features such as p l heating, h t tub heating, sn w melting, teleph ne tie-in, integrati n with Building Management Systems, as well as several ther functi ns. Please inquire.

For single boiler systems

- **Vitotronic 300** (type GW5B)
  Outdoor reset control for stand alone peration, for modulating water temperature with mixing valve (optional expansion board for two additional circuits).

For multi-boiler system (up to 4 boilers)

- with Vitocontrol control panel
  Vitotronic 300 (type GW5B) **and LON module** for modulating boiler water temperature for each boiler of the multi-boiler system and
- without Vitocontrol control panel
  Vitotronic 300 (type GW5B) **and LON module** for modulating boiler water temperature in conjunction with an external control unit (BMS).

  Vitocontrol-S, CM2 control panel
  with Vitotronic (300-K, type MW1B) for multi-boiler system, outdoor reset mode and mixing valve control for a maximum of 2 heating circuits with mixing valve and additional Vitotronic 200-H, type K1B for 1 heating circuit with mixing valve.

30% GLYCOL HOT WATER AIR CURTAIN

BY

MANUFACTURER

MARS

atmosphere is everything
14716 S. Broadway • Gardena, CA 90248 • USA
TEL:(310) 532-1555 • (800) 421-1266 • FAX:(310) 324-3030
Web Site: www.marsair.com • E-mail:info@marsair.com

PROJECT		OPTIONS/ITEMS	
TITLE			
COMMENTS		DATE 4/03/15	PAGE
		REV. NO	
MODEL NO. PH10 Series	DRAWING NO PH10HWS–F	DRAWN BY TVN	CHECKED BY	FILE NAME

Hot Water/Steam Heated Drawing

PH10
(Phantom 10 Series)

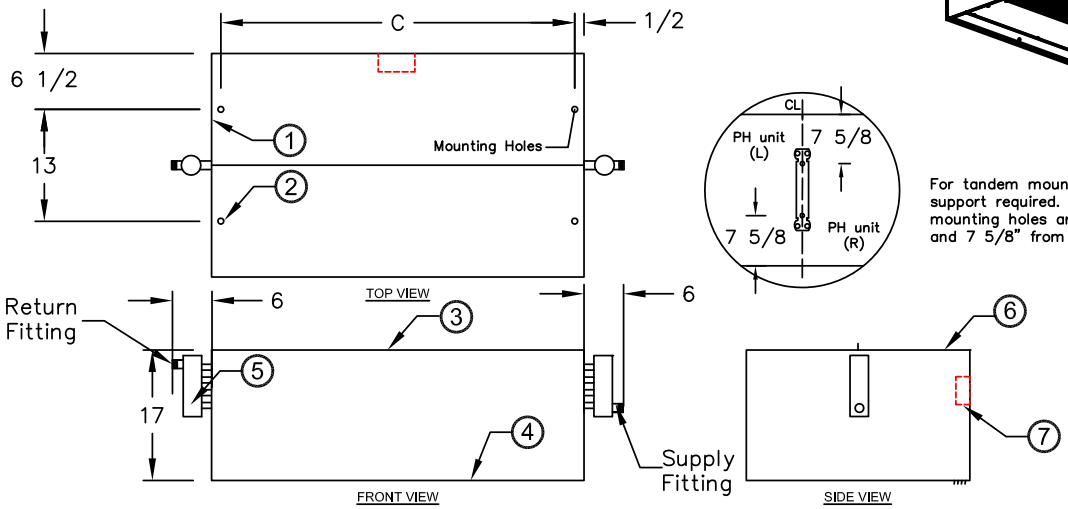

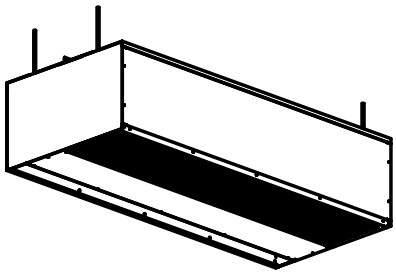

For tandem mounted units, center support required. The (2) center mounting holes are centerline of unit and 7 5/8" from front and rear of unit.

Intertek

⑩ Recommended Accessories

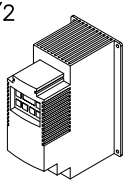

Variable Frequency Drive

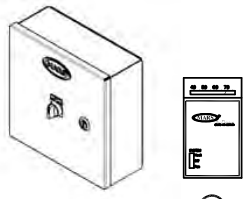

Control Panels with Remote T'stat ⑨

Door Limit Switches

*- Use corresponding letters in "Coil Data" then "Electrical Data" columns to complete the model numbers.

MODEL NUMBER	NOZZLE WIDTH A (in)	AIR CURTAIN LENGTH B (in)	MOUNTING CENTER C (in)	CONN. DIA. (in)
PH1036-1**-PW	36	36 1/8	35 1/8	1 1/2 MPT
PH1042-1**-PW	42	42 1/8	41 1/8	1 1/2 MPT
PH1048-1**-PW	48	48 1/8	47 1/8	1 1/2 MPT
PH1060-2**-PW	60	60 1/8	59 1/8	1 1/2 MPT
PH1072-2**-PW	72	72 1/8	71 1/8	1 1/2 MPT
PH1084-2**-PW	84	84 1/4	83 1/4	1 1/2 MPT
PH1096-2**-PW	96	96 1/4	95 1/4	1 1/2 MPT
PH10120-4**-PW	120	120 1/4	119 1/4	1 1/2 MPT

Notes:

1. This product is designed to meet the National Electric Code (NEC) and is ETL listed for the US and Canada (UL 1995 and CSA 22.2).
2. (4) 3/8" mounting holes for overhead mounting provided, (2) on each end. Units greater than 72" are multiple units joined with top mounting bracket that has (2) additional mounting holes.
3. All units have a self contained one piece cabinet, fire retardant with brushed aluminum housing. The exposed bottom surface is protected with baked on Pearl White color, rust preventative electrostatic polyurethane powder coating. Trim pieces included to match air curtains and ceilings.
4. Hot Water application shown. For Steam, return fitting is at bottom of manifold and supply is at center of manifold.
5. Cabinet is to be mounted from overhead and has sufficient strength for suspension from both ends without intermediate support. Units greater than 72" needs (2) additional threaded rods at center.
6. J-Box(es) for electrical wiring are provided.
7. Unit is to be installed such that air flow is unobstructed. Unit has a 4 1/2" air discharge nozzle containing adjustable air directional vanes with 40° sweep front to back.
8. Circuit protection as per NEC by others.
9. Optional motor control panel, door limit switch and mounting brackets are field installed and/or wired by others. The door limit switch is to be mounted such that the air curtain turns on as door begins to open. To prevent unit damage, the mounting brackets must be installed such that the bottom of the air curtain is not below the door header.

PH10 (Phantom 10) Series

Hot Water/Steam Heated

Model Lengths 36” – 120”

atmosphere is everything

14716 S. BROADWAY, GARDENA, CA 90248 ● Ph: (310) 532-1555 Fax: (310) 532-3030 ● www.marsair.com
© Copyright Mars Air Systems, LLC 2014

Hot Water/Steam Heated Data Sheet

Applications: Environmental Separation (up to 10’)

PH10 (Phantom 10)	Mechanical Data						Lab Data				
Model Number	Nozzle Length (in)	Length (in)	Depth (in)	Height (in)	Motor (hp)	Weight (lbs)	Max Core Velocity at Nozzle (fpm)	Avg Velocity (fpm)	Volume (cfm)	Uniformity (%)	Power Rating (watts)
[illegible]	[illegible]	[illegible]	2[illegible]	[illegible]	[illegible]2	[illegible]	[illegible]5[illegible]	[illegible]	[illegible]	[illegible]	[illegible]
[illegible]2[illegible]	[illegible]2	[illegible]2	2[illegible]	[illegible]	[illegible]2	[illegible]2	[illegible]5[illegible]	[illegible]	[illegible]5[illegible]	[illegible]	5[illegible]
[illegible]	[illegible]	[illegible]	2[illegible]	[illegible]	[illegible]2	[illegible]	[illegible]5	[illegible]2	[illegible]2	[illegible]	52[illegible]
[illegible]2[illegible]	[illegible]	[illegible]	2[illegible]	[illegible]	[illegible]2	[illegible]	[illegible]5[illegible]	22[illegible]	2[illegible]	[illegible]	[illegible]
[illegible]2[illegible]2[illegible]	[illegible]2	[illegible]2	2[illegible]	[illegible]	[illegible]2	[illegible]	[illegible]5[illegible]	[illegible]	2[illegible]2[illegible]	[illegible]	[illegible]2[illegible]
[illegible]2[illegible]	[illegible]	[illegible]	2[illegible]	[illegible]	[illegible]2	[illegible]	[illegible]5[illegible]	[illegible]	[illegible]	[illegible]	[illegible]
[illegible]2[illegible]	[illegible]	[illegible]	2[illegible]	[illegible]	[illegible]2	[illegible]	[illegible]5	[illegible]2	[illegible]2[illegible]	[illegible]	[illegible]
[illegible]2[illegible]	[illegible]2[illegible]	[illegible]2[illegible]	2[illegible]	[illegible]	[illegible]r[illegible]2	25[illegible]	[illegible]5[illegible]	22[illegible]	55[illegible]	[illegible]	[illegible]

* - Use corresponding letters in "Coil Data" then "Electrical Data" columns to complete the model numbers.

Note: Data above for 1725 RPM at 60 Hz, 50 Hz is 1425 RPM with a 17% reduction in the performance data.

Coil Data	Hot Water				Steam		
	Coil Code (W)	GPM	MBH	Temp Rise (°F)	Coil Code (Y)	MBH	Temp Rise (°F)
[illegible]	[illegible]	4	40.0	26	[illegible]	60.0	38
[illegible]2[illegible]	[illegible]	5	47.0	28	[illegible]	67.0	40
[illegible]	[illegible]	5	51.0	29	[illegible]	73.0	42
[illegible]2[illegible]	[illegible]	6	74.0	25	[illegible]	108.0	36
[illegible]2[illegible]2[illegible]	[illegible]	8	87.0	28	[illegible]	121.0	39
[illegible]2[illegible]	[illegible]	8	96.0	28	[illegible]	136.0	40
[illegible]2[illegible]	[illegible]	9	106.0	30	[illegible]	148.0	42
[illegible]2[illegible]	[illegible]	11	153.0	26	[illegible]	217.0	36

EAT: 70 F, EWT: 200 F, Steam pressure: 5 PSI

Electrical Data (FLA)	Unit Voltage (Voltage Code)				
	115v/1Ø (A)	208-230v/1Ø (D)	208-230v/3Ø (G)	460v/3Ø (H)	575v/3Ø (I)
[illegible]	5[illegible]	2[illegible]5	[illegible]	[illegible]	[illegible]
[illegible]2[illegible]	5[illegible]	2[illegible]5	[illegible]	[illegible]	[illegible]
[illegible]	5[illegible]	2[illegible]5	[illegible]	[illegible]	[illegible]
[illegible]2[illegible]	[illegible]2	5[illegible]	[illegible]2	[illegible]	[illegible]
[illegible]2[illegible]2[illegible]	[illegible]2	5[illegible]	[illegible]2	[illegible]	[illegible]
[illegible]2[illegible]	[illegible]2	5[illegible]	[illegible]2	[illegible]	[illegible]
[illegible]2[illegible]	[illegible]2	5[illegible]	[illegible]2	[illegible]	[illegible]
[illegible]2[illegible]	2[illegible]	[illegible]	[illegible]2[illegible]	[illegible]2	2[illegible]

* - Use corresponding letters in "Coil Data" then "Electrical Data" columns to complete the model numbers.

Note: For Ampacity Multiply FLA X 1.25

Features:

Air Curtain

- 1/2 HP Continuous Duty TEAO Motors
- Recessed mounted in ceiling for invisible coverage
- ETL Certified to conform to UL 1995 (US) and CSA 22.2 (Canada) Standards
- (4) 3/8” top mounting holes provided
- Utilized in premium design concepts
- Durable aluminum construction
- Cabinet has sufficient strength for fastening to wall on both ends without intermediate support. (Tandem mounted units longer than 72” require center support)
- Cleanable polyester filters included as standard
- Adjustable air directional vanes with 40° sweep front to back
- Standard color is Pearl White
- Rust preventative electrostatic polyurethane powder coating
- 18 month parts warranty
- Freight Included (FOB Continental USA)
- Proudly Made in the USA

Hot Water and Steam Coils

- Coil casings shall not be less than 16 gauge galvanized steel with tube holes formed with extruded collars.
- Fins are die formed .006” aluminum (1 row – 10 FPI, 2 row – 8 FPI)
- Coils tubes constructed of heavy wall, 5/8" OD seamless copper (Steam - .035” & Hot Water - .025”)
- Coil tubes arranged in a staggered pattern and mechanically expanded into fins to ensure a uniform pressure bond
- Manifolds shall be of heavy seamless copper construction
- All joints shall be brazed with high temperature silver brazing alloy (Steam – 7% & Hot Water – 3%), max steam operating pressure: 30 PSI
- Fittings shall be of wrought copper or similar construction such that the entire fluid circuit shall be of compatible nonferrous materials.
- Manifold shall be fitted with 1/4" vent or drain fittings
- Supply fitting is on the right side of coil. Return fitting is on the left side

EXAMPLE

PH10 72 -2 W A -PW

- Series: Phantom 10
- LENGTH OF UNIT
- # OF MOTORS
- COIL CODE
- VOLTAGE CODE
- COLOR

Options and Accessories: (see Accessories Brochure)

- Motor Control Panels with remote mounted t’stat
- Steam distribution, Cupro Nickel and CRN coils
- Rust resistant epoxy coated or SS coils
- Custom housing colors and finishes (304SS, 316SS)

Sound Levels: (measured at 10’ in an open field)

1 Motor Unit = 66 dBA, 2 Motor Unit = 68 dBA, 3 Motor Unit = 71 dBA, 4 Motor Unit = 73 dBA

NOTE: MARS AIR SYSTEMS, LLC reserves the right to change specifications and product design without notice. Such revisions do not entitle the buyer to corresponding changes, improvements, additions or replacements for previously purchased equipment.

PUMPS

BY

MANUFACTURER

GRUNDFOS

Construction Datasheet

Project name	: PS 320X	Tag Number	: P-1,2,3 - 85 GPM @ 60' TDH
Consulting engineer	: Lilker Associates	Service	:
Customer	:	Model	: 15959 LCS
Customer ref. / PO	:	Quantity	: 1
Quote Number / ID	: 768254	Quoted By (Sales Office)	: DOLPHIN EQUIPMENT CORP
Date last saved	: 03/01/2018 9:09 AM	Quoted By (Sales Engineer)	: Robert Hansen

Construction

Nozzle	Size (in.)	Nozzle Configuration	Pos'n
Suction	2	NPS	-
Discharge	1.5	NPS	-

Orientation / Configuration	: Horizontal
Rotation	: Clockwise
Wear Ring Configuration	: Single - Case
Discharge Elbow Size	: -
Subplate	: -
Sump Depth (feet)	: -
Bearing Frame	: -
Bearing Frame Foot	: -
Bearing Type (Radial/Thrust)	: -
Bearing Lubrication	: -
Thrust Bearing	: -
Intermediate Bearing	: -
Lower Bearing	: -
Bearing Housing Accessories	: -
PACO Construction code	: 14-15959-130368-1622P

Baseplate, Coupling and Guard

Baseplate	: Welded Steel Fabrication
Drip Pan	: No drip pan
Coupling	: Rigid, Axial Split Coupling (aluminum) RASC1
Guard	: OSHA Approved

Seal & Packing Construction

Sealing Method	: Single Seal, Type 21
Seal Material	: Buna Carbon Ceramic SS-Spring and Hardware
Packing Gland	: -
Lantern Ring	: -
Recirculation Lines	: Copper Tubing with Brass Fittings

Weights (Approx.)

Pump	: 70.00 lb
Baseplate	: 60.00 lb
Driver	: 97.00 lb
Estimated Shipping gross weight	: 227.0 lb

Motor Information

Manufacturer	: Baldor
Frame Size	: 182TC
Power	: 3.00 hp
RPM	: 1800 rpm
Enclosure	: ODP
Operating Power Supply	: 230/460/3/60
Efficiency	: Premium
Service factor	: 1.15
Motor Application	: General Purpose
Motor Options/Accessories	: -
Cord Length (feet)	: -

Materials

Case	: Cast Iron, ASTM A48 - Class 30
Motor Bracket	: Cast Iron, ASTM-A48, CL 30
Impeller	: Stainless Steel, AISI-304 (H304)
Impeller Cap Screw and Washer	: Stainless Steel, AISI-303
Impeller Key	: Stainless Steel, AISI 316
Case wear ring	: Tin Bronze, ASTM B584-90500 (B18)
Impeller wear ring	: -
Pump Shaft	: Stainless Steel, AISI-303
Sleeve	: -
Line Shaft	: -
Column	: -
Discharge Pipe	: -
Discharge Elbow	: -
Suction Elbow	: -
Subplate	: -
Hardware	: Steel, Grade 5
O Rings	: Buna N
Pump Coatings	: Standard Manufacturer's Paint

Pump Performance Datasheet

Customer	:	Quote Number / ID	: 768254
Customer ref. / PO	:	Model	: 15959 LCS
Tag Number	: P-1,2,3 - 85 GPM @ 60' TDH	Stages	: 1
Service	:	Based on curve number	: RC9846-SS Rev 0
Quantity	: 1	Date last saved	: 03/01/2018 9:09 AM

Operating Conditions

Flow, rated	: 85.00 USgpm
Differential head / pressure, rated (requested)	: 60.00 ft
Differential head / pressure, rated (actual)	: 60.10 ft
Suction pressure, rated / max	: 0.00 / 0.00 psi.g
NPSH available, rated	: Ample
Frequency	: 60 Hz

Performance

Speed, rated	: 1775 rpm
Impeller diameter, rated	: 7.61 in
Impeller diameter, maximum	: 9.60 in
Impeller diameter, minimum	: 7.00 in
Efficiency	: 68.03 %
NPSH required / margin required	: 4.68 / 0.00 ft
nq (imp. eye flow) / S (imp. eye flow)	: 14 / 68 Metric units
MCSF	: 49.83 USgpm
Head, maximum, rated diameter	: 62.95 ft
Head rise to shutoff	: 2.16 %
Flow, best eff. point	: 123.8 USgpm
Flow ratio, rated / BEP	: 68.68 %
Diameter ratio (rated / max)	: 79.27 %
Head ratio (rated dia / max dia)	: 57.33 %
Cq/Ch/Ce/Cn [ANSI/HI 9.6.7-2010]	: 1.00 / 1.00 / 1.00 / 1.00
Selection status	: Acceptable

Liquid

Liquid type	: Glycol, Propylene, 30%
Additional liquid description	:
Solids diameter, max	: 0.00 in
Solids concentration, by volume	: 0.00 %
Temperature, max	: 180.0 deg F
Fluid density, rated / max	: 0.988 / 0.988 SG
Viscosity, rated	: 0.66 cP
Vapor pressure, rated	: 7.54 psi.a

Material

Material selected	: Cast iron

Pressure Data

Maximum working pressure	: 26.93 psi.g
Maximum allowable working pressure	: 165.0 psi.g
Maximum allowable suction pressure	: 175.0 psi.g
Hydrostatic test pressure	: 263.0 psi.g

Driver & Power Data (@Max density)

Motor sizing specification	: Max power (non-overloading)
Margin over specification	: 0.00 %
Service factor	: 1.00
Power, hydraulic	: 1.27 hp
Rated power (based on duty point)	: 1.87 hp
Max power (non-overloading)	: 2.85 hp
Nameplate motor rating	: 3.00 hp / 2.24 kW

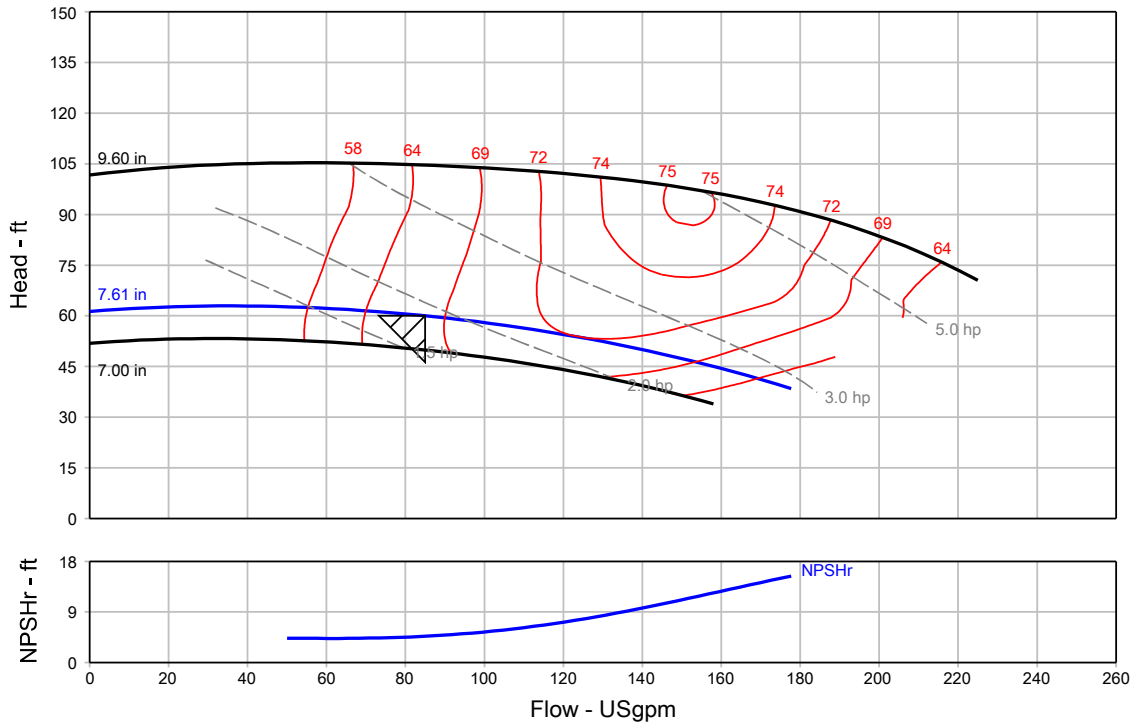

Grundfos Series LCS - Split Coupled End Suction Pump

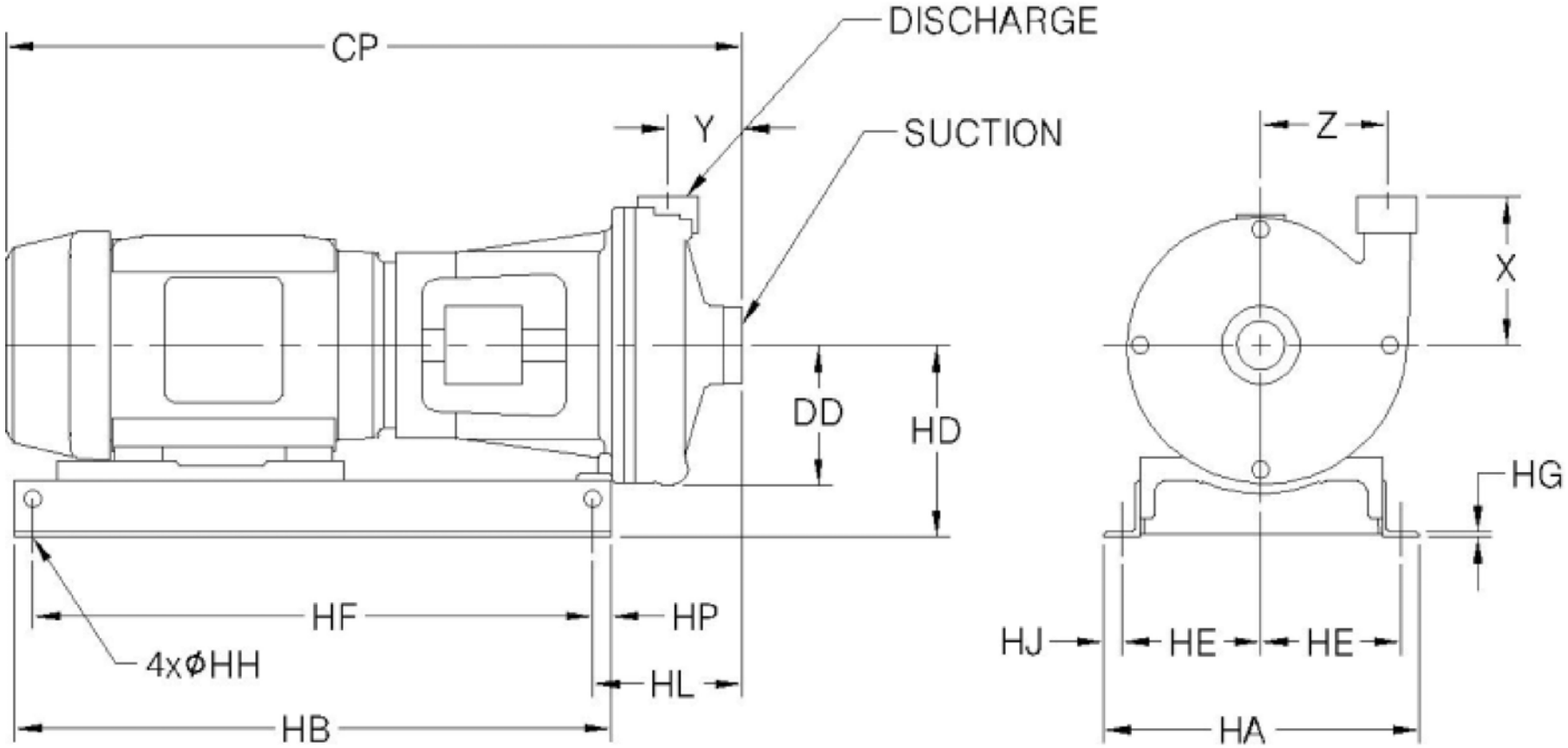

NOT FOR CONSTRUCTION, unless certified and referenced on order

Units	Frame	Suct	Disch	CP	DD	HA	HB	HD	HE	HF	HG	HH	HJ	HL	HP	X	Y	Z
inches	182TC	2	1.5	30.00	6.00	17.00	25.75	8.50	7.00	23.75	0.25	0.63	1.50	6.68	1.00	6.00	3.63	5.38

Construction Datasheet

Project name	: PS 320X	Tag Number	: P-4,5 - 210 GPM @ 80' TDH
Consulting engineer	: Lilker Associates	Service	:
Customer	:	Model	: 25957 LCS
Customer ref. / PO	:	Quantity	: 1
Quote Number / ID	: 768254	Quoted By (Sales Office)	: DOLPHIN EQUIPMENT CORP
Date last saved	: 06/26/2018 7:20 PM	Quoted By (Sales Engineer)	: Robert Hansen

Construction

Nozzle	Size (in.)	Nozzle Configuration	Pos'n
Suction	3	125# ANSI	-
Discharge	2.5	125# ANSI	-

Orientation / Configuration	: Horizontal
Rotation	: Clockwise
Wear Ring Configuration	: Single - Case
Discharge Elbow Size	: -
Subplate	: -
Sump Depth (feet)	: -
Bearing Frame	: -
Bearing Frame Foot	: -
Bearing Type (Radial/Thrust)	: -
Bearing Lubrication	: -
Thrust Bearing	: -
Intermediate Bearing	: -
Lower Bearing	: -
Bearing Housing Accessories	: -
PACO Construction code	: 14-25957-130368-1742P

Baseplate, Coupling and Guard

Baseplate	: Welded Steel Fabrication
Drip Pan	: No drip pan
Coupling	: Rigid, Axial Split Coupling (aluminum) RASC2
Guard	: OSHA Approved

Seal & Packing Construction

Sealing Method	: Single Seal, Type 21
Seal Material	: Buna Carbon Ceramic SS-Spring and Hardware
Packing Gland	: -
Lantern Ring	: -
Recirculation Lines	: Copper Tubing with Brass Fittings

Weights (Approx.)

Pump	: 95.00 lb
Baseplate	: 60.00 lb
Driver	: 117.0 lb
Estimated Shipping gross weight	: 272.0 lb

Motor Information

Manufacturer	: Baldor
Frame Size	: 213TC
Power	: 7.50 hp
RPM	: 1800 rpm
Enclosure	: ODP
Operating Power Supply	: 230/460/3/60
Efficiency	: Premium
Service factor	: 1.15
Motor Application	: General Purpose
Motor Options/Accessories	: -
Cord Length (feet)	: -

Materials

Case	: Cast Iron, ASTM A48 - Class 30
Motor Bracket	: Cast Iron, ASTM-A48, CL 30
Impeller	: Stainless Steel, AISI-304 (H304)
Impeller Cap Screw and Washer	: Stainless Steel, AISI-303
Impeller Key	: Stainless Steel, AISI 316
Case wear ring	: Tin Bronze, ASTM B584-90500 (B18)
Impeller wear ring	: -
Pump Shaft	: Stainless Steel, AISI-303
Sleeve	: -
Line Shaft	: -
Column	: -
Discharge Pipe	: -
Discharge Elbow	: -
Suction Elbow	: -
Subplate	: -
Hardware	: Steel, Grade 5
O Rings	: Buna N
Pump Coatings	: Standard Manufacturer's Paint

Pump Performance Datasheet

Customer	:	Quote Number / ID	: 768254
Customer ref. / PO	:	Model	: 25957 LCS
Tag Number	: P-4,5 - 210 GPM @ 80' TDH	Stages	: 1
Service	:	Based on curve number	: RC9867-1-SS Rev 0
Quantity	: 1	Date last saved	: 06/26/2018 7:20 PM

Operating Conditions

Flow, rated	: 210.0 USgpm
Differential head / pressure, rated (requested)	: 80.00 ft
Differential head / pressure, rated (actual)	: 80.03 ft
Suction pressure, rated / max	: 0.00 / 0.00 psi.g
NPSH available, rated	: Ample
Frequency	: 60 Hz

Performance

Speed, rated	: 1775 rpm
Impeller diameter, rated	: 9.00 in
Impeller diameter, maximum	: 9.60 in
Impeller diameter, minimum	: 6.50 in
Efficiency	: 77.93 %
NPSH required / margin required	: 6.83 / 0.00 ft
nq (imp. eye flow) / S (imp. eye flow)	: 21 / 115 Metric units
MCSF	: 70.15 USgpm
Head, maximum, rated diameter	: 88.43 ft
Head rise to shutoff	: 9.10 %
Flow, best eff. point	: 260.5 USgpm
Flow ratio, rated / BEP	: 80.61 %
Diameter ratio (rated / max)	: 93.75 %
Head ratio (rated dia / max dia)	: 84.32 %
Cq/Ch/Ce/Cn [ANSI/HI 9.6.7-2010]	: 1.00 / 1.00 / 1.00 / 1.00
Selection status	: Acceptable

Liquid

Liquid type	: Hot Water
Additional liquid description	:
Solids diameter, max	: 0.00 in
Solids concentration, by volume	: 0.00 %
Temperature, max	: 180.0 deg F
Fluid density, rated / max	: 0.972 / 0.972 SG
Viscosity, rated	: 0.35 cP
Vapor pressure, rated	: 7.51 psi.a

Material

Material selected	: Cast iron

Pressure Data

Maximum working pressure	: 37.20 psi.g
Maximum allowable working pressure	: 165.0 psi.g
Maximum allowable suction pressure	: 175.0 psi.g
Hydrostatic test pressure	: 263.0 psi.g

Driver & Power Data (@Max density)

Motor sizing specification	: Max power (non-overloading)
Margin over specification	: 0.00 %
Service factor	: 1.00
Power, hydraulic	: 4.12 hp
Rated power (based on duty point)	: 5.29 hp
Max power (non-overloading)	: 7.06 hp
Nameplate motor rating	: 7.50 hp / 5.59 kW

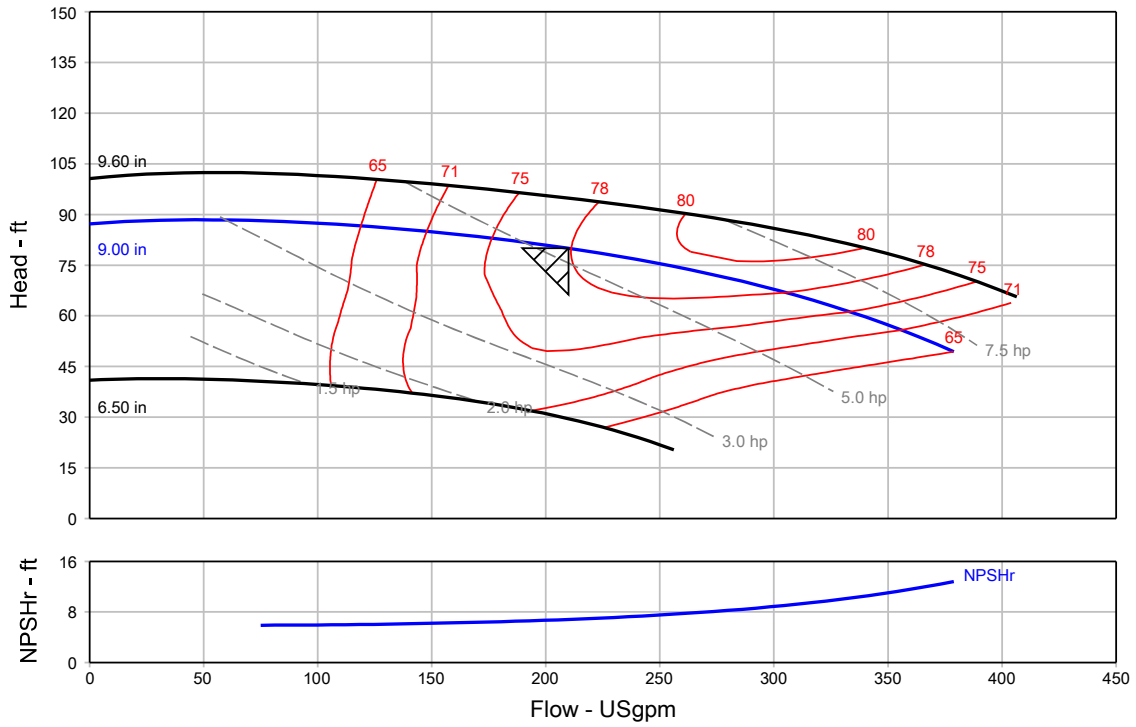

General Arrangement

Project name	: PS 320X	Tag Number	: P-4,5 - 210 GPM @ 80' TDH
Consulting engineer	: Lilker Associates	Service	:
Customer	:	Model	: 25957 LCS
Customer ref. / PO	:	Quantity of pumps	: 1
Quote Number / ID	: 768254	Quoted By (Sales Office)	: DOLPHIN EQUIPMENT CORP
Date last saved	: 06/26/2018 7:20 PM	Quoted By (Sales Engineer)	: Robert Hansen

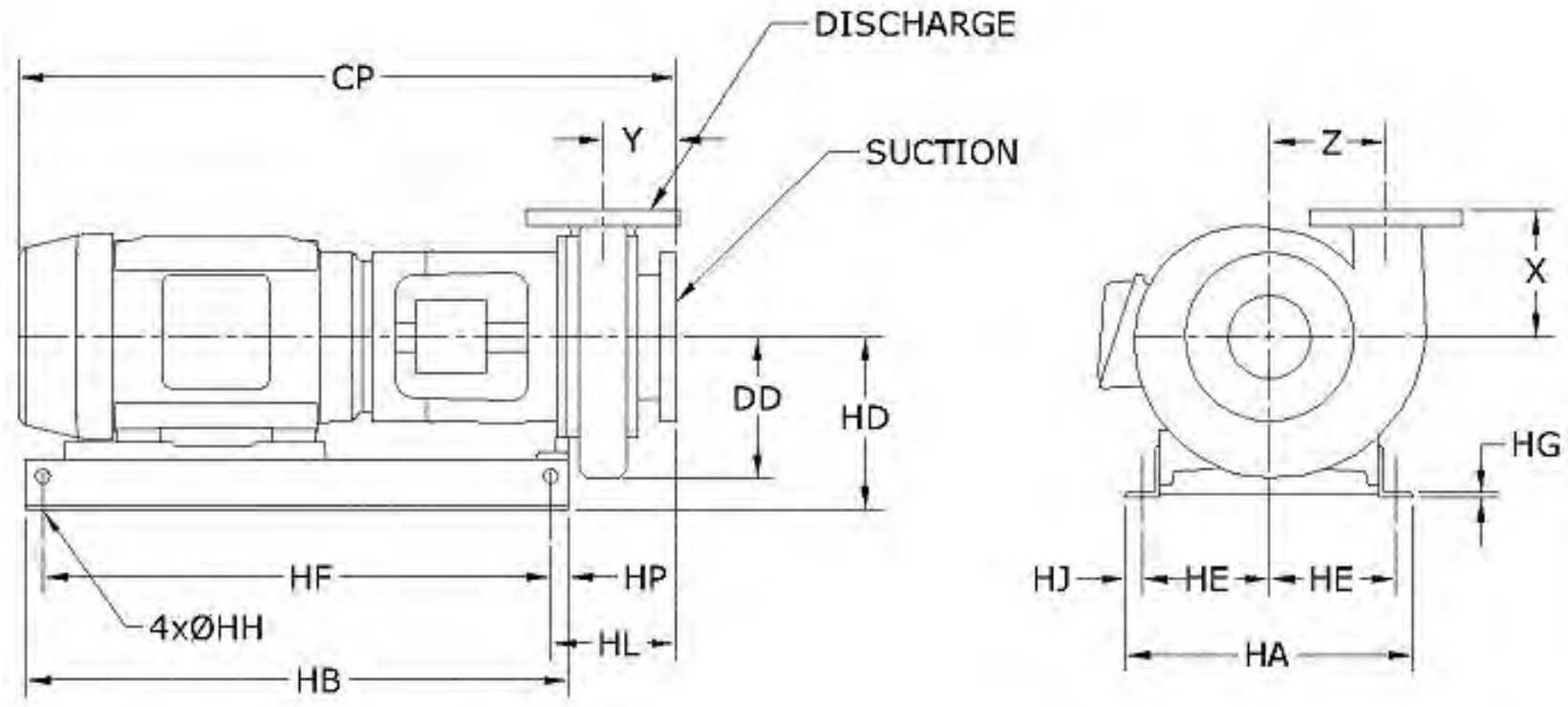

NOT FOR CONSTRUCTION, Unless certified and referenced on order

Units	Frame	Suct(in)	Disch(in)	CP	DD	HA	HB	HD	HE	HF	HG	HH	HJ	HL	HP	X	Y	Z	Weight ea
inches	**213TC**	**3**	**2.5**	**34.00**	**6.80**	**17.00**	**25.75**	**9.25**	**7.00**	**23.75**	**0.25**	**0.63**	**1.50**	**7.93**	**1.00**	**6.75**	**4.13**	**6.00**	**272.0**

Conditions of Service		Motor Data			
Flow: 210.0 USgpm	Fluid: Hot Water	HP: 7.5	Encl: ODP	Phase: 3	Efficiency: Premium
TDH: 80.00 ft	Temp.: 180.0 deg F	RPM: 1775 rpm	Hz: 60	Voltage: 230/460	S.F.: 1.15

Construction Datasheet

Project name	: PS 320X	Tag Number	: P-6,7 - 505 GPM @ 80' TDH
Consulting engineer	: Lilker Associates	Service	:
Customer	:	Model	: 4012A LCS
Customer ref. / PO	:	Quantity	: 1
Quote Number / ID	: 768254	Quoted By (Sales Office)	: DOLPHIN EQUIPMENT CORP
Date last saved	: 06/26/2018 7:24 PM	Quoted By (Sales Engineer)	: Robert Hansen

Construction

Nozzle	Size (in.)	Nozzle Configuration	Pos'n
Suction	5	125# ANSI	-
Discharge	4	125# ANSI	-

Orientation / Configuration	: Horizontal
Rotation	: Clockwise
Wear Ring Configuration	: Single - Case
Discharge Elbow Size	: -
Subplate	: -
Sump Depth (feet)	: -
Bearing Frame	: -
Bearing Frame Foot	: -
Bearing Type (Radial/Thrust)	: -
Bearing Lubrication	: -
Thrust Bearing	: -
Intermediate Bearing	: -
Lower Bearing	: -
Bearing Housing Accessories	: -
PACO Construction code	: 14-4012A-1A0368-1852P

Baseplate, Coupling and Guard

Baseplate	: Welded Steel Fabrication
Drip Pan	: No drip pan
Coupling	: Rigid, Axial Split Coupling (aluminum) RASC3
Guard	: OSHA Approved

Seal & Packing Construction

Sealing Method	: Single Seal, Type 21
Seal Material	: Buna Carbon Ceramic SS-Spring and Hardware
Packing Gland	: -
Lantern Ring	: -
Recirculation Lines	: Copper Tubing with Brass Fittings

Weights (Approx.)

Pump	: 248.0 lb
Baseplate	: 61.00 lb
Driver	: 259.0 lb
Estimated Shipping gross weight	: 568.0 lb

Motor Information

Manufacturer	: Baldor
Frame Size	: 256TC
Power	: 20.00 hp
RPM	: 1800 rpm
Enclosure	: ODP
Operating Power Supply	: 230/460/3/60
Efficiency	: Premium
Service factor	: 1.15
Motor Application	: General Purpose
Motor Options/Accessories	: -
Cord Length (feet)	: -

Materials

Case	: Cast Iron, ASTM A48 - Class 30
Motor Bracket	: Cast Iron, ASTM-A48, CL 30
Impeller	: Stainless Steel, AISI-304 (H304)
Impeller Cap Screw and Washer	: Stainless Steel, AISI-303
Impeller Key	: Stainless Steel, AISI 316
Case wear ring	: Tin Bronze, ASTM B584-90500 (B18)
Impeller wear ring	: -
Pump Shaft	: Stainless Steel, AISI-303
Sleeve	: -
Line Shaft	: -
Column	: -
Discharge Pipe	: -
Discharge Elbow	: -
Suction Elbow	: -
Subplate	: -
Hardware	: Steel, Grade 5
O Rings	: Buna N
Pump Coatings	: Standard Manufacturer's Paint

Pump Performance Datasheet

Customer	:	Quote Number / ID	: 768254
Customer ref. / PO	:	Model	: 4012A LCS
Tag Number	: P-6,7 - 505 GPM @ 80' TDH	Stages	: 1
Service	:	Based on curve number	: RC9919-SS Rev 0
Quantity	: 1	Date last saved	: 06/26/2018 7:24 PM

Operating Conditions		Liquid	
Flow, rated	: 505.0 USgpm	Liquid type	: Glycol, Propylene, 30%
Differential head / pressure, rated (requested)	: 80.00 ft	Additional liquid description	:
Differential head / pressure, rated (actual)	: 79.97 ft	Solids diameter, max	: 0.00 in
Suction pressure, rated / max	: 0.00 / 0.00 psi.g	Solids concentration, by volume	: 0.00 %
NPSH available, rated	: Ample	Temperature, max	: 55.00 deg F
Frequency	: 60 Hz	Fluid density, rated / max	: 1.032 / 1.032 SG
Performance		Viscosity, rated	: 5.57 cP
Speed, rated	: 1780 rpm	Vapor pressure, rated	: 0.14 psi.a
Impeller diameter, rated	: 9.50 in	**Material**	
Impeller diameter, maximum	: 12.10 in	Material selected	: Cast iron
Impeller diameter, minimum	: 9.00 in	**Pressure Data**	
Efficiency	: 77.62 %	Maximum working pressure	: 40.18 psi.g
NPSH required / margin required	: 16.04 / 0.00 ft	Maximum allowable working pressure	: 175.0 psi.g
nq (imp. eye flow) / S (imp. eye flow)	: 30 / 100 Metric units	Maximum allowable suction pressure	: 175.0 psi.g
MCSF	: 232.9 USgpm	Hydrostatic test pressure	: 263.0 psi.g
Head, maximum, rated diameter	: 89.97 ft	**Driver & Power Data (@Max density)**	
Head rise to shutoff	: 12.33 %	Motor sizing specification	: Max power (non-overloading)
Flow, best eff. point	: 654.3 USgpm	Margin over specification	: 0.00 %
Flow ratio, rated / BEP	: 77.18 %	Service factor	: 1.00
Diameter ratio (rated / max)	: 78.51 %	Power, hydraulic	: 10.52 hp
Head ratio (rated dia / max dia)	: 56.96 %	Rated power (based on duty point)	: 13.56 hp
Cq/Ch/Ce/Cn [ANSI/HI 9.6.7-2010]	: 1.00 / 1.00 / 0.99 / 1.00	Max power (non-overloading)	: 15.59 hp
Selection status	: Acceptable	Nameplate motor rating	: 20.00 hp / 14.91 kW

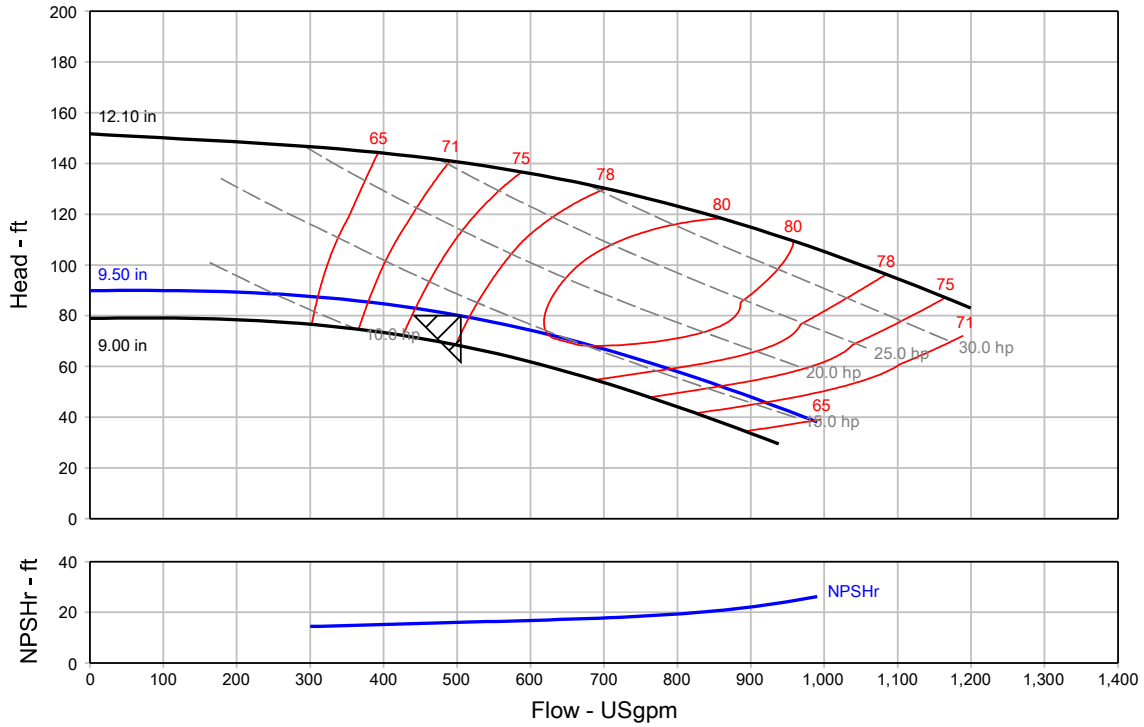

General Arrangement

Project name	: PS 320X	Tag Number	: P-6,7 - 505 GPM @ 80' TDH
Consulting engineer	: Lilker Associates	Service	:
Customer	:	Model	: 4012A LCS
Customer ref. / PO	:	Quantity of pumps	: 1
Quote Number / ID	: 768254	Quoted By (Sales Office)	: DOLPHIN EQUIPMENT CORP
Date last saved	: 06/26/2018 7:24 PM	Quoted By (Sales Engineer)	: Robert Hansen

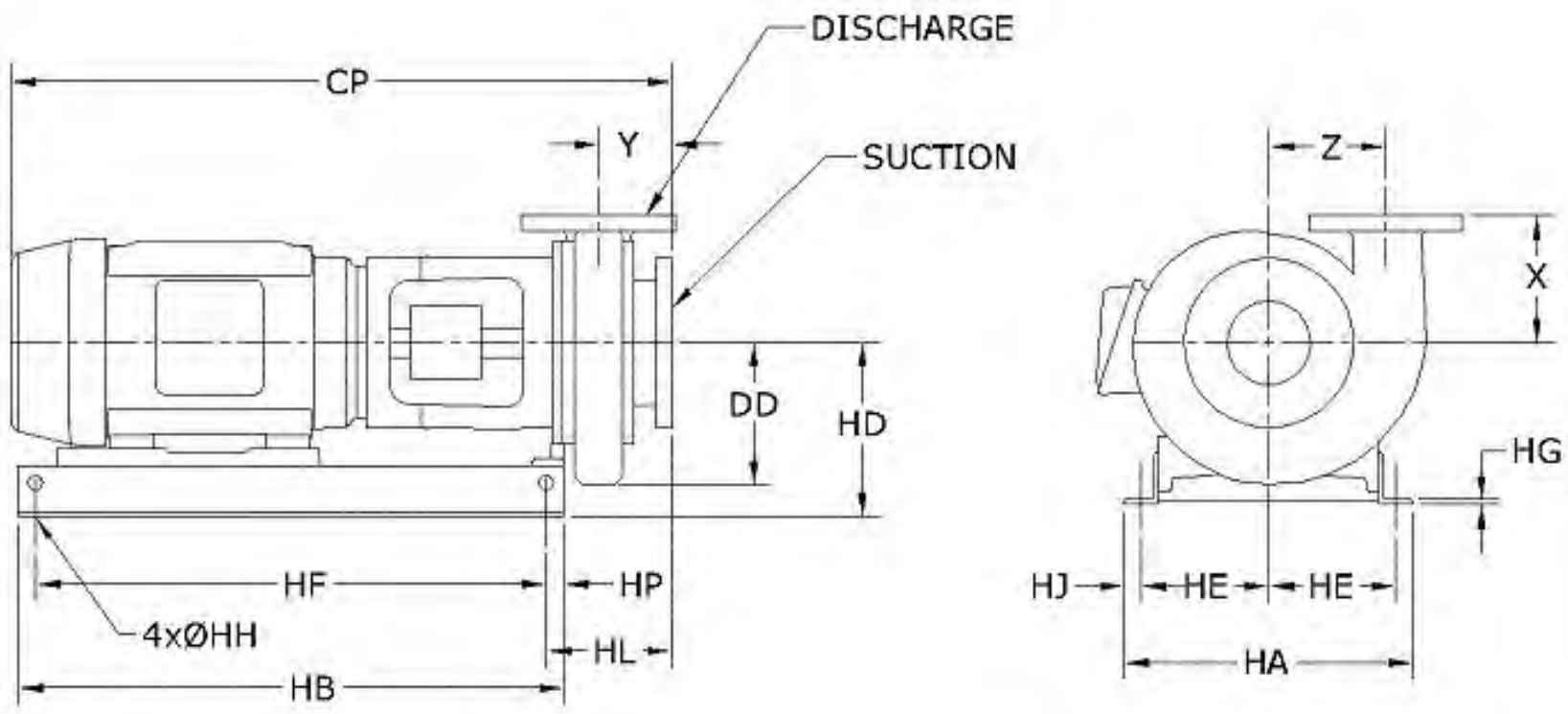

NOT FOR CONSTRUCTION, Unless certified and referenced on order

Units	Frame	Suct(in)	Disch(in)	CP	DD	HA	HB	HD	HE	HF	HG	HH	HJ	HL	HP	X	Y	Z	Weight ea
inches	**256TC**	**5**	**4**	**41.00**	**10.70**	**17.00**	**32.00**	**11.00**	**7.50**	**30.00**	**0.25**	**0.63**	**1.00**	**8.75**	**1.00**	**10.00**	**5.18**	**8.38**	**568.0**

Conditions of Service		Motor Data			
Flow: 505.0 USgpm	Fluid: Glycol, Propylene, 30%	HP: 20	Encl: ODP	Phase: 3	Efficiency: Premium
TDH: 80.00 ft	Temp.: 45.00 deg F	RPM: 1780 rpm	Hz: 60	Voltage: 230/460	S.F.: 1.15

EXHAUST FANS

BY

MANUFACTURER

COOK

MARK: TEF-1
PROJECT: PS 320X FAN SELECTIONS
DATE: 9/26/2018

ACE-B

Downblast Centrifugal Exhaust Ventilator Roof Mounted/Belt Drive

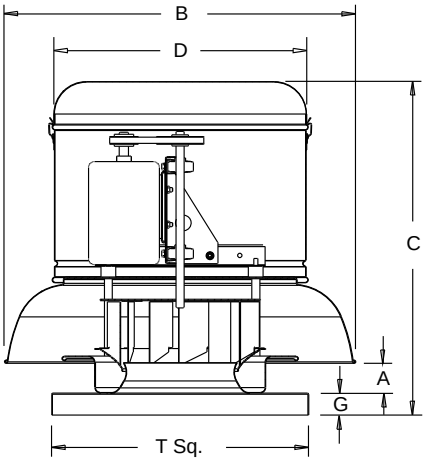

STANDARD CONSTRUCTION FEATURES:

All aluminum housing - Backward inclined all aluminum wheel - Two piece top cap with stainless steel quick release latches - Welded curb cap corners - Birdscreen - Vibration isolators - Lifting Lugs - Permanently lubricated ball bearing motors - Oil and heat resistant, static conducting belts - Adjustable pitch drives through 5 hp motor - Corrosion resistant fasteners - Regreasable bearings in a cast iron pillow block housing, rated at 200,000 hours average life - All fans factory adjusted to specified fan RPM -Transit tested packaging - Standard motors ship factory installed.

Performance (*Bhp includes 9% drive loss)

Qty	Catalog Number	Flow (CFM)	SP (inwc)	Fan RPM	Power* (HP)	FEG
1	180C8B	2680	1.20	1143	.985	n/a(<1HP)

Altitude (ft): 0 Temperature (F): 70

Motor Information

HP	RPM	Volts/Ph/Hz	Enclosure	FLA	Mounted
1-1/2	1725	208/3/60	ODP -PE	6.6	Yes

FLA based on NEC (2014) Table 430.250

Sound Data Inlet Sound Power by Octave Band

1	2	3	4	5	6	7	8	LwA	dBA	Sones
78	77	79	73	68	65	59	56	75	64	12.8

Accessories:

Premium Efficiency Motor (Min. 86.5%)
DRIVES (1.5 SF) @ 1143 RPM
BDM-24 MTR DPR 230V
ROOF CURB RCA 28-24H

Dimensions (inches)

A	3-15/16
B	37-11/16
C	34-1/2
D	26-1/16
G	3
T Sq.	30
Roof Open.Sq.*	25-1/2

NOTE: Accessories may affect dimensions shown.

Weight(lbs)***	Shipping	209	Unit	177

*Roof opening size for curbs supplied by Cook only.
***Includes fan, motor & accessories.

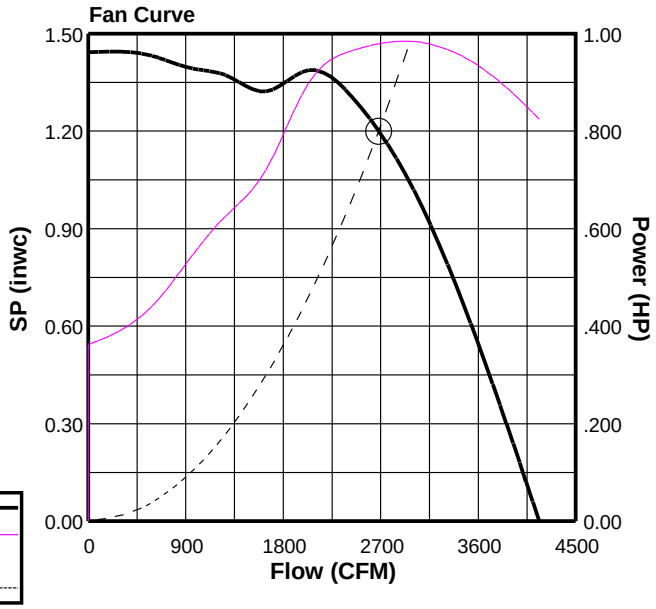

Fan Curve Legend

CFM vs SP	———
CFM vs HP	———
Point of Operation	○
System Curve	- - - - -

v9.9.145.0

MARK: TEF-2
PROJECT: PS 320X FAN SELECTIONS
DATE: 6/26/2018

ACE-B

Downblast Centrifugal Exhaust Ventilator Roof Mounted/Belt Drive

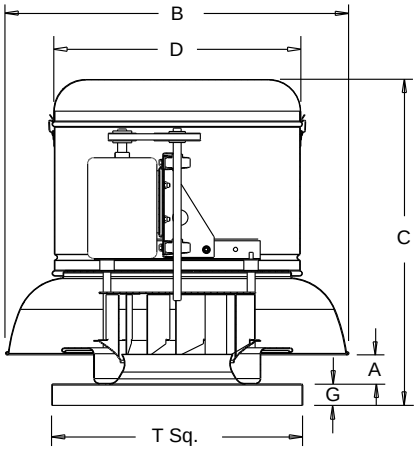

STANDARD CONSTRUCTION FEATURES:

All aluminum housing - Backward inclined all aluminum wheel - Two piece top cap with stainless steel quick release latches - Welded curb cap corners - Birdscreen - Vibration isolators - Lifting Lugs - Permanently lubricated ball bearing motors - Oil and heat resistant, static conducting belts - Adjustable pitch drives through 5 hp motor - Corrosion resistant fasteners - Regreasable bearings in a cast iron pillow block housing, rated at 200,000 hours average life - All fans factory adjusted to specified fan RPM -Transit tested packaging - Standard motors ship factory installed.

Performance (*Bhp includes 16% drive loss)

Qty	Catalog Number	Flow (CFM)	SP (inwc)	Fan RPM	Power* (HP)	FEG
1	100C3B	800	.750	1906	.237	n/a(<1HP)

Altitude (ft): 0 Temperature (F): 70

Motor Information

HP	RPM	Volts/Ph/Hz	Enclosure	FLA	Mounted
1/4	1725	115/1/60	ODP -SE	5.8	Yes

FLA based on NEC (2014) Table 430.248

Sound Data Inlet Sound Power by Octave Band

1	2	3	4	5	6	7	8	LwA	dBA	Sones
73	75	78	76	68	64	59	55	76	64	12.4

Accessories:

DRIVES (1.5 SF) @ 1906 RPM
BDM-12 MTR DPR 230V
ROOF CURB RCA 16-24H

Dimensions (inches)

A	2-7/8
B	23-9/16
C	21-1/8
D	16-11/16
G	2
T Sq.	18
Roof Open.Sq.*	13-1/2

NOTE: Accessories may affect dimensions shown.

Weight(lbs)***	Shipping	89	Unit	31

*Roof opening size for curbs supplied by Cook only.
***Includes fan, motor & accessories.

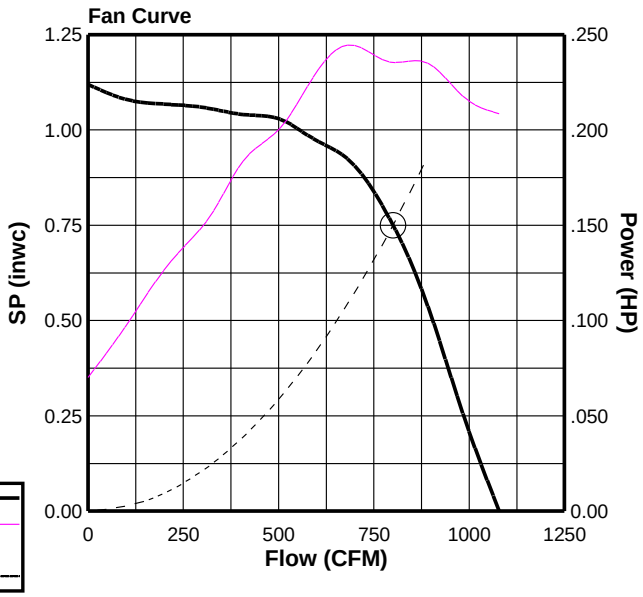

Fan Curve Legend

CFM vs SP	———
CFM vs HP	———
Point of Operation	○
System Curve	- - - -

v9.9.145.0

PROJECT: PS 320X FAN SELECTIONS
DATE: 6/26/2018

BDM

Motorized Backdraft Damper

STANDARD CONSTRUCTION FEATURES:

.020 aluminum blades - .060 aluminum frame - Aluminum hinge pins - Brass bushings - Non-overloading motor.

Notes:

Max operating temperature 130 Deg F (50 Deg C)

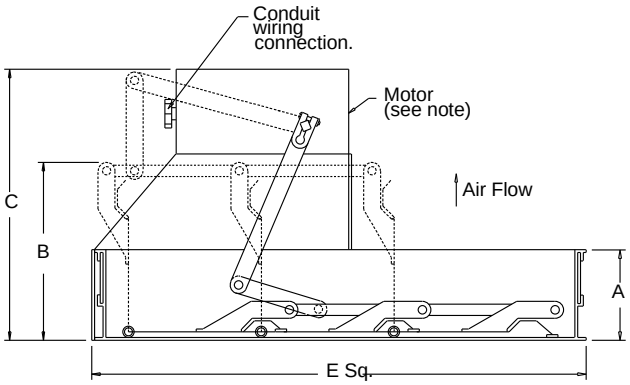

Dimensions (inches)

Mark	Qty	Description	A	B Max	C	E Sq.	# Motors
TEF-2	1	BDM-12 MTR DPR 230V	1-7/8	5-3/16	8	11-3/4	1

PROJECT: PS 320X FAN SELECTIONS
DATE: 6/26/2018

RCA

Aluminum Roof Curb

STANDARD CONSTRUCTION FEATURES:

0.080 aluminum - 1-1/2", 3 lbs. density thermal and acoustical insulation - Continuously welded corners - Wood nailer.

Options:(As noted below*)

1) **No wood nailer (deduct 1-1/2" for actual height).**
2) **Damper tray.**

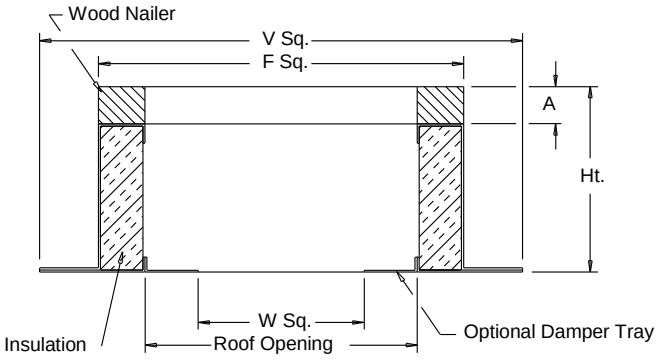

Dimensions (inches)

Mark	Qty	Description	Ht	Options*	A	F Sq.	V Sq.	W Sq.	Roof Opening
TEF-2	1	RCA 16	24	-	1-1/2	16-1/2	20-1/2	9-3/4	13-1/2

MARK: TEF-3
PROJECT: PS 320X FAN SELECTIONS
DATE: 6/26/2018

ACE-B

Downblast Centrifugal Exhaust Ventilator Roof Mounted/Belt Drive

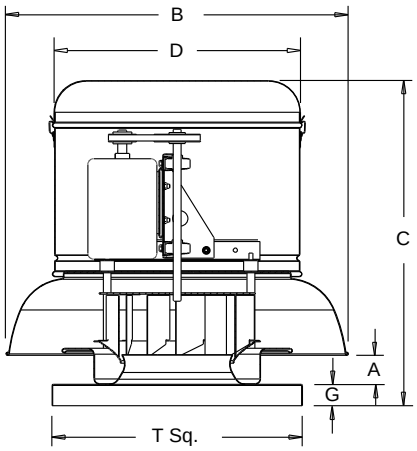

STANDARD CONSTRUCTION FEATURES:

All aluminum housing - Backward inclined all aluminum wheel - Two piece top cap with stainless steel quick release latches - Welded curb cap corners - Birdscreen - Vibration isolators - Lifting Lugs - Permanently lubricated ball bearing motors - Oil and heat resistant, static conducting belts - Adjustable pitch drives through 5 hp motor - Corrosion resistant fasteners - Regreasable bearings in a cast iron pillow block housing, rated at 200,000 hours average life - All fans factory adjusted to specified fan RPM -Transit tested packaging - Standard motors ship factory installed.

Performance (*Bhp includes 17% drive loss)

Qty	Catalog Number	Flow (CFM)	SP (inwc)	Fan RPM	Power* (HP)	FEG
1	80C2B	380	.650	1507	.165	n/a(<1HP)

Altitude (ft): 0 Temperature (F): 70

Motor Information

HP	RPM	Volts/Ph/Hz	Enclosure	FLA	Mounted
1/6	1725	115/1/60	ODP -SE	4.4	Yes

FLA based on NEC (2014) Table 430.248

Sound Data Inlet Sound Power by Octave Band

1	2	3	4	5	6	7	8	LwA	dBA	Sones
68	70	74	62	58	54	51	48	67	56	8.1

Accessories:

DRIVES (1.5 SF) @ 1507 RPM

Dimensions (inches)

A	2-7/8
B	23-9/16
C	21-1/8
D	16-11/16
G	2
T Sq.	18
Roof Open.Sq.*	13-1/2

NOTE: Accessories may affect dimensions shown.

Weight(lbs)***	Shipping	46	Unit	38

*Roof opening size for curbs supplied by Cook only.
***Includes fan, motor & accessories.

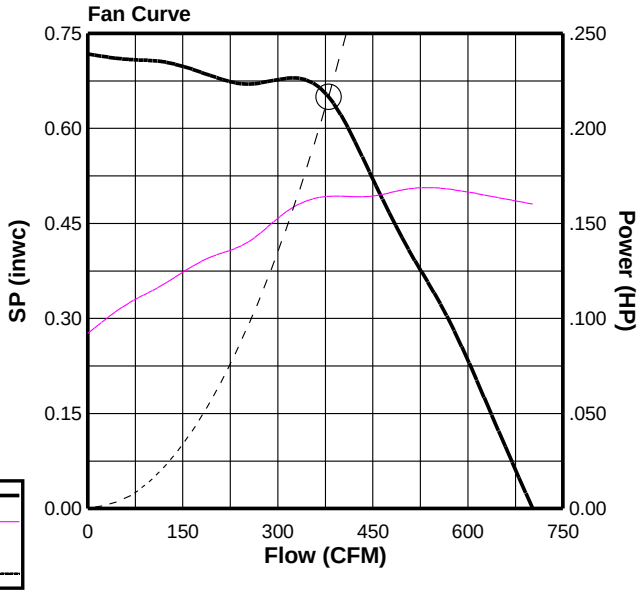

Fan Curve Legend

CFM vs SP	———
CFM vs HP	———
Point of Operation	◯
System Curve	- - - - -

v9.9.145.0

MARK: EF-5
PROJECT: PS 320X FAN SELECTIONS
DATE: 6/26/2018

SQN-D

Centrifugal Square Inline
Direct Drive

STANDARD CONSTRUCTION FEATURES:
All aluminum wheel - Galvanized steel housing - Three removable access doors - Closed cell neoprene gasketing - Inlet and discharge duct collars - Universal mounting feet - Permanently lubricated motor - Transit tested packaging.

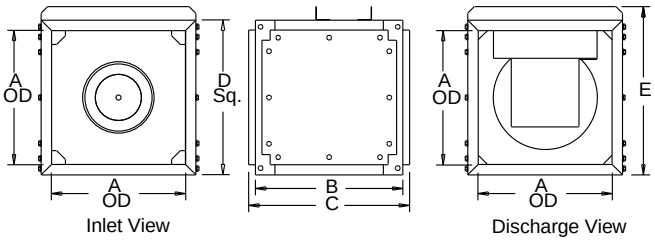

Performance

Qty	Catalog Number	Flow (CFM)	SP (inwc)	Fan RPM	Input Watts	FEG	Speed Control
1	90SQN15D	300	.600	1677	143	n/a(<1HP)	FSC

Altitude (ft): 0 Temperature (F): 70

Motor Information

HP	RPM	Volts/Ph/Hz	Enclosure	TOL
1/6	1550	115/1/60	TENV -SE	Yes

Sound Data Sound Power by Octave Band

	1	2	3	4	5	6	7	8	LwA	dBA	Sones
Inlet	67	69	69	65	58	53	49	43	66	54	6.9
Outlet	83	68	71	63	60	56	50	43	67	55	8.3

Accessories:
BDM-12 MTR DPR 115V
FAN SPEED CONTROLLER 5 AMP 120 VOLT
RC-75 SET(4) - ISOLATORS

Dimensions (inches)

A	12
B	15
C	17
D Sq.	14
E	15-9/16

NOTE: Accessories may affect dimensions shown.

Weight(lbs)***	Shipping	55	Unit	52

***Includes fan, motor & accessories.

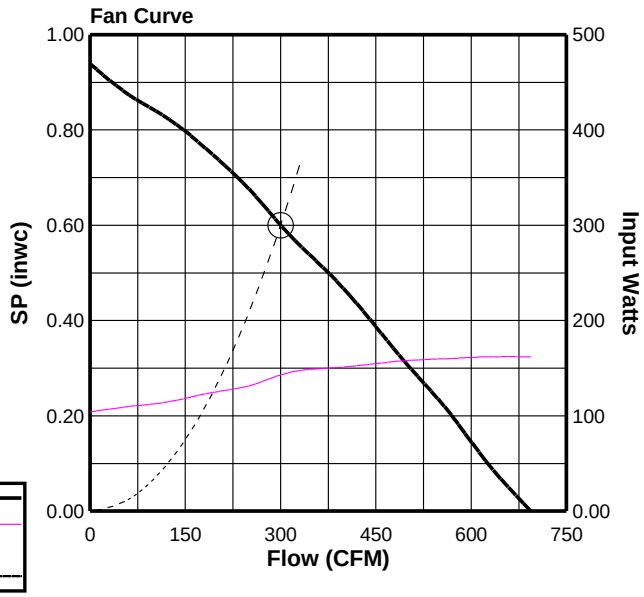

Fan Curve Legend

CFM vs SP	———
CFM vs Watts	———
Point of Operation	○
System Curve	- - - -

v9.9.145.0

PROJECT: PS 320X FAN SELECTIONS
DATE: 6/26/2018

BDM

Motorized Backdraft Damper

STANDARD CONSTRUCTION FEATURES:

.020 aluminum blades - .060 aluminum frame - Aluminum hinge pins - Brass bushings - Non-overloading motor.

Notes:

Max operating temperature 130 Deg F (50 Deg C)

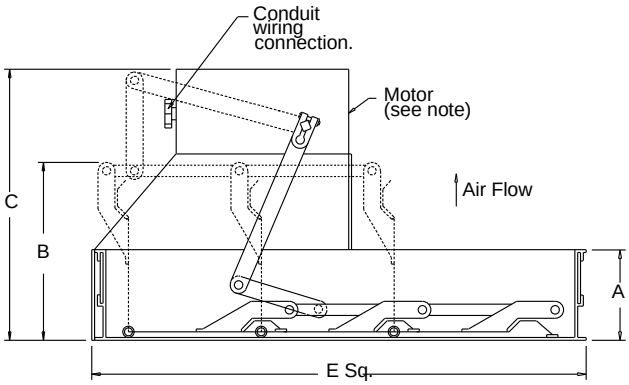

Dimensions (inches)

Mark	Qty	Description	A	B Max	C	E Sq.	# Motors
EF-5	1	BDM-12 MTR DPR 115V	1-7/8	5-3/16	8	11-3/4	1

PROJECT: PS 320X FAN SELECTIONS
DATE: 6/26/2018

FSC

Fan Speed Controls

STANDARD CONSTRUCTION FEATURES:

PRODUCT DESCRIPTION - Through the "Quadrac" integrated semi-conductor device it is now possible to offer this system with many advantages. Fewer semi-conductor parts mean greater reliability and the passivation process used in the manufacture of the semi-conductor insures long life. Printed circuit construction eliminates wiring difficulties and guarantees workmanship. All of these factors serve to offer the most important of all features - quality. SPEED CONTROL - Positive Off/On action in the control dial. Speed range set to the customer's requirements. CONTROL RATING - 120 volts, 60 cycles, 1 phase. Maximum ambient temperature - 120 degree F (5 AMP, 10 AMP, 15 AMP). 220/240 volt, 50/60 cycles, 1 phase. Maximum ambient temperature - 120 degree F (5 AMP, 10 AMP). 220/240 volt model not UL listed. Fan cannot have UL listing if furnished with prewired 220/240 volt FSC. 277 volt, 60 cycles, 1 phase. Maximum ambient temperature - 120 degree F (5 AMP). WARNING - Power must be turned off before installing this unit. STANDARD INSTALLATION - Fits any standard single gang box. Turn off power and connect the two wires on the control to the two switch wires in the usual manner. The connection box is not supplied. SPECIAL FEATURES - Complete range control, solid state "Quadrac" integrated circuitry, solid state construction for long reliable operating life, saves on electric bills.

Dimensions (inches)

Mark	Qty	Description
EF-5	1	FSC 5 AMP 120 VOLT

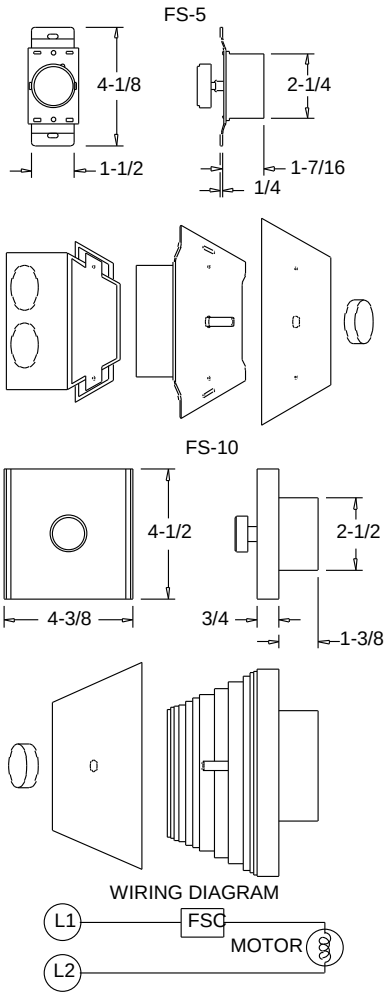

PROJECT: PS 320X FAN SELECTIONS
DATE: 6/26/2018

RIS CEILING

Rubber-In-Shear Isolator Ceiling Mounted

NOTE:
Dimensions are for informational purposes only - Not for construction.

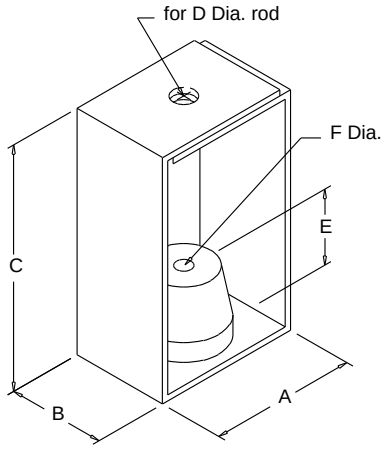

Dimensions (inches)

Mark	Qty	Description	A	B	C	D	E	F
EF-5	1	RC-75 SET(4)	2-5/32	1-1/2	2-23/32	11/16	15/32	3/8

MARK: EF-1
PROJECT: PS 320X FAN SELECTIONS
DATE: 6/26/2018

ACE-D

Downblast Centrifugal
Exhaust Ventilator
Roof Mounted/Direct Drive

STANDARD CONSTRUCTION FEATURES:
All aluminum housing - Backward inclined all aluminum wheel - Two piece top cap with stainless steel quick release latches (sizes 120 - 300) - Welded curb cap corners - Birdscreen - Permanently lubricated ball bearing motors - Corrosion resistant fasteners - Transit tested packaging.

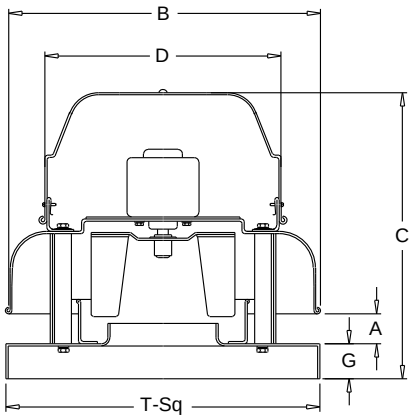

Performance

Qty	Catalog Number	Flow (CFM)	SP (inwc)	Fan RPM	Input Watts	FEG
1	90C15DM	237	.750	1670	87	n/a(<1HP)

Altitude (ft): 0 Temperature (F): 70

Motor Information

HP	RPM	Volts/Ph/Hz	Enclosure	TOL
1/8	1550	115/1/60	ODP -SE	Yes

Sound Data Inlet Sound Power by Octave Band

1	2	3	4	5	6	7	8	LwA	dBA	Sones
70	66	68	62	55	54	51	52	65	53	7.0

Accessories:

Dimensions (inches)

A	2-1/2
B O.D.	18-3/4
C	16-13/16
D O.D.	16-3/4
G	2
T Sq.	18
Roof Open. Sq.*	13-1/2

NOTE: Accessories may affect dimensions shown.

Weight(lbs)***	Shipping	21	Unit	13

* Roof opening size for curbs supplied by Cook only.
***Includes fan, motor & accessories.

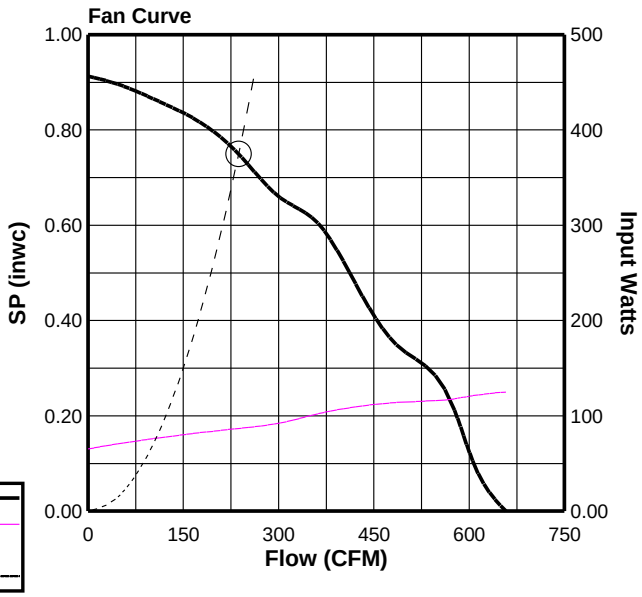

Fan Curve Legend

CFM vs SP	———
CFM vs Watts	———
Point of Operation	◯
System Curve	- - - -

v9.9.145.0

MARK: EF-2
PROJECT: PS 320X FAN SELECTIONS
DATE: 6/26/2018

ACE-D

Downblast Centrifugal
Exhaust Ventilator
Roof Mounted/Direct Drive

STANDARD CONSTRUCTION FEATURES:
All aluminum housing - Backward inclined all aluminum wheel - Two piece top cap with stainless steel quick release latches (sizes 120 - 300) - Welded curb cap corners - Birdscreen - Permanently lubricated ball bearing motors - Corrosion resistant fasteners - Transit tested packaging.

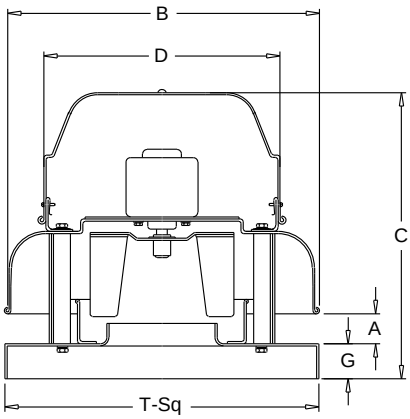

Performance

Qty	Catalog Number	Flow (CFM)	SP (inwc)	Fan RPM	Input Watts	FEG
1	90C15DM	237	.750	1670	87	n/a(<1HP)

Altitude (ft): 0 Temperature (F): 70

Motor Information

HP	RPM	Volts/Ph/Hz	Enclosure	TOL
1/8	1550	115/1/60	ODP -SE	Yes

Sound Data Inlet Sound Power by Octave Band

1	2	3	4	5	6	7	8	LwA	dBA	Sones
70	66	68	62	55	54	51	52	65	53	7.0

Accessories:

Dimensions (inches)

A	2-1/2
B O.D.	18-3/4
C	16-13/16
D O.D.	16-3/4
G	2
T Sq.	18
Roof Open. Sq.*	13-1/2

NOTE: Accessories may affect dimensions shown.

Weight(lbs)***	Shipping	21	Unit	13

* Roof opening size for curbs supplied by Cook only.
***Includes fan, motor & accessories.

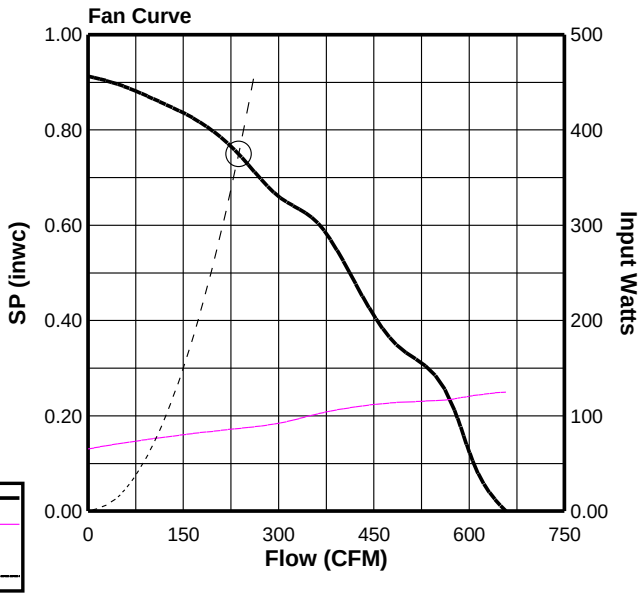

Fan Curve Legend

CFM vs SP	———
CFM vs Watts	———
Point of Operation	◯
System Curve	- - - -

v9.9.145.0

MARK: EF-3
PROJECT: PS 320X FAN SELECTIONS
DATE: 6/26/2018

ACE-D

Downblast Centrifugal
Exhaust Ventilator
Roof Mounted/Direct Drive

STANDARD CONSTRUCTION FEATURES:
All aluminum housing - Backward inclined all aluminum wheel - Two piece top cap with stainless steel quick release latches (sizes 120 - 300) - Welded curb cap corners - Birdscreen - Permanently lubricated ball bearing motors - Corrosion resistant fasteners - Transit tested packaging.

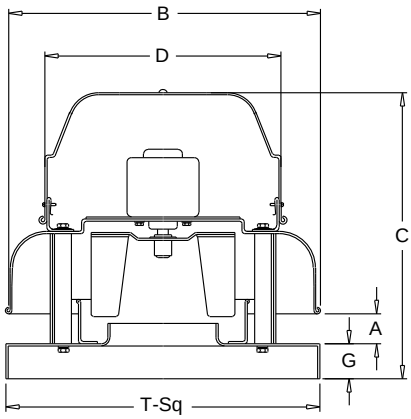

Performance

Qty	Catalog Number	Flow (CFM)	SP (inwc)	Fan RPM	Input Watts	FEG
1	100C15DH	384	.750	1550	121	n/a(<1HP)

Altitude (ft): 0 Temperature (F): 70

Motor Information

HP	RPM	Volts/Ph/Hz	Enclosure	TOL
1/8	1550	115/1/60	ODP -SE	Yes

Sound Data Inlet Sound Power by Octave Band

1	2	3	4	5	6	7	8	LwA	dBA	Sones
72	74	79	66	58	55	52	50	72	60	10.2

Accessories:

Dimensions (inches)

A	2-1/2
B O.D.	18-3/4
C	16-13/16
D O.D.	16-3/4
G	2
T Sq.	18
Roof Open. Sq.*	13-1/2

NOTE: Accessories may affect dimensions shown.

Weight(lbs)***	Shipping	22	Unit	14

* Roof opening size for curbs supplied by Cook only.
***Includes fan, motor & accessories.

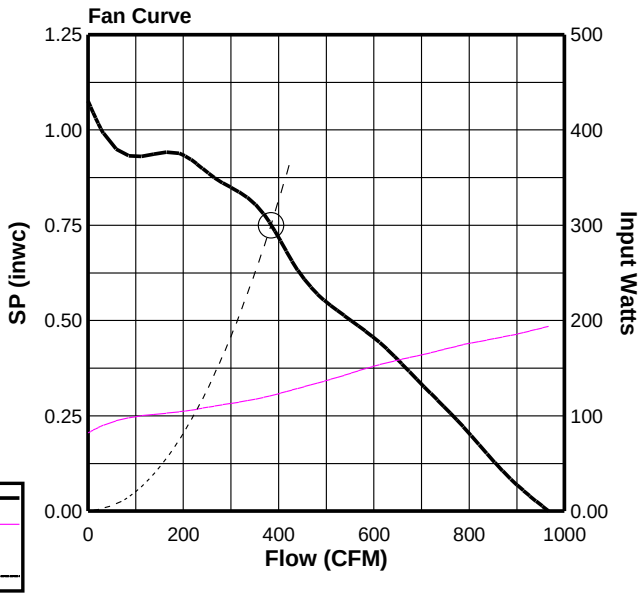

Fan Curve Legend

CFM vs SP	———
CFM vs Watts	———
Point of Operation	◯
System Curve	- - - -

v9.9.145.0

MARK: EF-6
PROJECT: PS 320X FAN SELECTIONS
DATE: 6/26/2018

ACE-D

Downblast Centrifugal
Exhaust Ventilator
Roof Mounted/Direct Drive

STANDARD CONSTRUCTION FEATURES:
All aluminum housing - Backward inclined all aluminum wheel - Two piece top cap with stainless steel quick release latches (sizes 120 - 300) - Welded curb cap corners - Birdscreen - Permanently lubricated ball bearing motors - Corrosion resistant fasteners - Transit tested packaging.

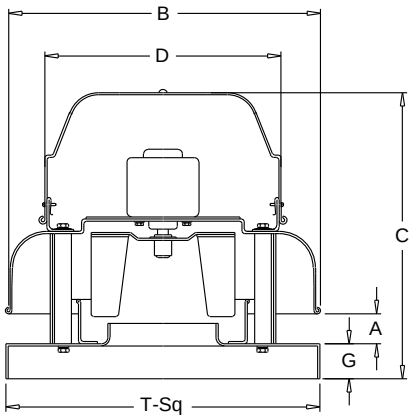

Performance

Qty	Catalog Number	Flow (CFM)	SP (inwc)	Fan RPM	Input Watts	FEG	Speed Control
1	90C15DH	150	.650	1461	83	n/a(<1HP)	FSC

Altitude (ft): 0 Temperature (F): 70

Motor Information

HP	RPM	Volts/Ph/Hz	Enclosure	TOL
1/8	1550	115/1/60	ODP -SE	Yes

Sound Data Inlet Sound Power by Octave Band

1	2	3	4	5	6	7	8	LwA	dBA	Sones
68	69	69	60	55	54	48	45	64	52	6.6

Accessories:
FAN SPEED CONTROLLER 5 AMP 120 VOLT

Dimensions (inches)

A	2-1/2
B O.D.	18-3/4
C	16-13/16
D O.D.	16-3/4
G	2
T Sq.	18
Roof Open. Sq.*	13-1/2

NOTE: Accessories may affect dimensions shown.

Weight(lbs)***	Shipping	22	Unit	14

* Roof opening size for curbs supplied by Cook only.
***Includes fan, motor & accessories.

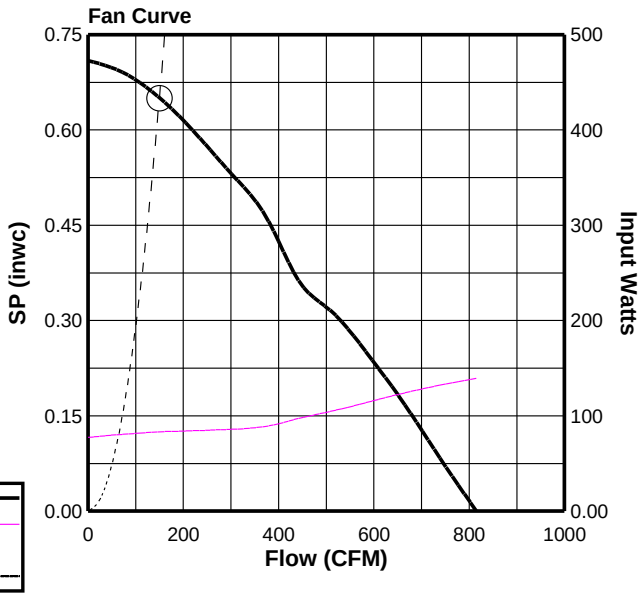

Fan Curve Legend

CFM vs SP	———
CFM vs Watts	———
Point of Operation	◯
System Curve	- - - -

v9.9.145.0

PROJECT: PS 320X FAN SELECTIONS
DATE: 6/26/2018

FSC

Fan Speed Controls

STANDARD CONSTRUCTION FEATURES:

PRODUCT DESCRIPTION - Through the "Quadrac" integrated semi-conductor device it is now possible to offer this system with many advantages. Fewer semi-conductor parts mean greater reliability and the passivation process used in the manufacture of the semi-conductor insures long life. Printed circuit construction eliminates wiring difficulties and guarantees workmanship. All of these factors serve to offer the most important of all features - quality. SPEED CONTROL - Positive Off/On action in the control dial. Speed range set to the customer's requirements. CONTROL RATING - 120 volts, 60 cycles, 1 phase. Maximum ambient temperature - 120 degree F (5 AMP, 10 AMP, 15 AMP). 220/240 volt, 50/60 cycles, 1 phase. Maximum ambient temperature - 120 degree F (5 AMP, 10 AMP). 220/240 volt model not UL listed. Fan cannot have UL listing if furnished with prewired 220/240 volt FSC. 277 volt, 60 cycles, 1 phase. Maximum ambient temperature - 120 degree F (5 AMP). WARNING - Power must be turned off before installing this unit. STANDARD INSTALLATION - Fits any standard single gang box. Turn off power and connect the two wires on the control to the two switch wires in the usual manner. The connection box is not supplied. SPECIAL FEATURES - Complete range control, solid state "Quadrac" integrated circuitry, solid state construction for long reliable operating life, saves on electric bills.

Dimensions (inches)

Mark	Qty	Description
EF-6	1	FSC 5 AMP 120 VOLT

FS-5

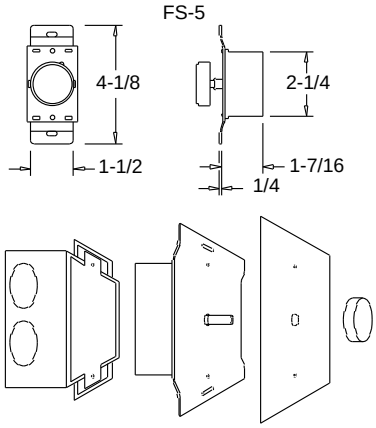

FS-10

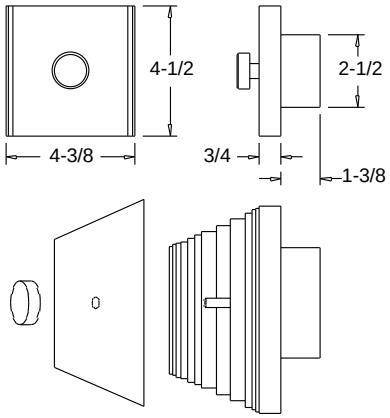

WIRING DIAGRAM

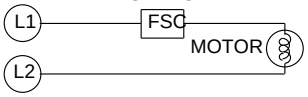

MARK: GEF-1
PROJECT: PS 320X FAN SELECTIONS
DATE: 6/26/2018

ACE-B

Downblast Centrifugal Exhaust Ventilator Roof Mounted/Belt Drive

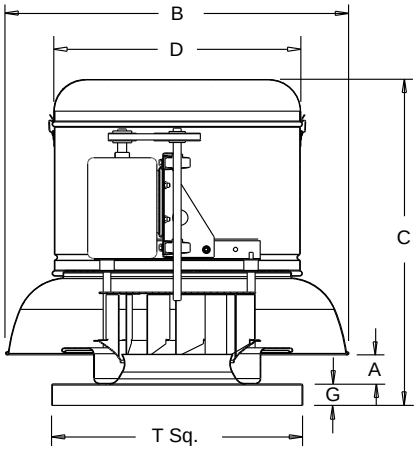

STANDARD CONSTRUCTION FEATURES:

All aluminum housing - Backward inclined all aluminum wheel - Two piece top cap with stainless steel quick release latches - Welded curb cap corners - Birdscreen - Vibration isolators - Lifting Lugs - Permanently lubricated ball bearing motors - Oil and heat resistant, static conducting belts - Adjustable pitch drives through 5 hp motor - Corrosion resistant fasteners - Regreasable bearings in a cast iron pillow block housing, rated at 200,000 hours average life - All fans factory adjusted to specified fan RPM -Transit tested packaging - Standard motors ship factory installed.

Performance (*Bhp includes 9% drive loss)

Qty	Catalog Number	Flow (CFM)	SP (inwc)	Fan RPM	Power* (HP)	FEG
1	180C7B	2000	1.50	1278	.920	n/a(<1HP)

Altitude (ft): 0 Temperature (F): 70

Motor Information

HP	RPM	Volts/Ph/Hz	Enclosure	FLA	Mounted
1	1725	208/1/60	ODP -SE	8.8	Yes

FLA based on NEC (2014) Table 430.248

Sound Data Inlet Sound Power by Octave Band

1	2	3	4	5	6	7	8	LwA	dBA	Sones
78	79	79	75	70	66	60	57	77	65	13.6

Accessories:

DRIVES (1.5 SF) @ 1278 RPM
WHEEL REDUCED 33% - BANDED

Dimensions (inches)

A	3-15/16
B	37-11/16
C	34-1/2
D	26-1/16
G	3
T Sq.	30
Roof Open.Sq.*	25-1/2

NOTE: Accessories may affect dimensions shown.

Weight(lbs)***	Shipping	141	Unit	109

*Roof opening size for curbs supplied by Cook only.
***Includes fan, motor & accessories.

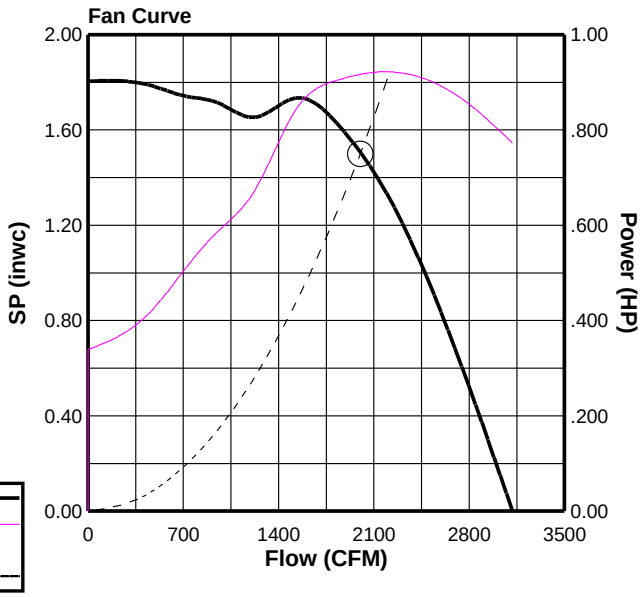

Fan Curve Legend

CFM vs SP	———
CFM vs HP	———
Point of Operation	○
System Curve	- - - -

v9.9.145.0

MARK: KEF-1
PROJECT: PS 320X FAN SELECTIONS
DATE: 6/26/2018

VCR-XP

Upblast Centrifugal
Exhaust Ventilator
Roof Mounted/Belt Drive

STANDARD CONSTRUCTION FEATURES:

All aluminum housing - Backward inclined all aluminum wheel - Two piece top cap with stainless steel quick release latches - One piece bottom spinning - Welded curb cap corners - Lifting Lugs - Permanently lubricated ball bearing motors - Oil and heat resistant, static conducting belts - Adjustable pitch drives through 5 hp motor - Corrosion resistant fasteners - Regreasable bearings in cast iron pillow block housing, rated at 200,000 hours average life - All fans factory adjusted to specified fan RPM - Transit tested packaging.

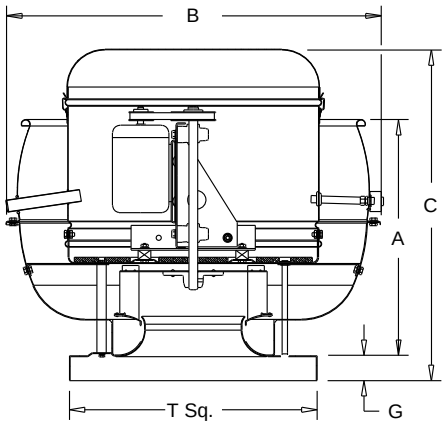

Performance (*Bhp includes 7% drive loss)

Qty	Catalog Number	Flow (CFM)	SP (inwc)	Fan RPM	Power* (HP)	FEG
1	225VX10B	3000	3.00	1777	2.74	63

Altitude (ft): 0 Temperature (F): 70

Motor Information

HP	RPM	Volts/Ph/Hz	Enclosure	FLA	Mounted
3	1725	208/3/60	ODP -PE	10.6	Yes

FLA based on NEC (2014) Table 430.250

Sound Data Inlet Sound Power by Octave Band

1	2	3	4	5	6	7	8	LwA	dBA	Sones
81	87	90	89	80	76	75	72	89	77	27

Accessories:

Premium Efficiency Motor (Min. 89.5%)
DRIVES (1.5 SF) @ 1777 RPM
UL762 (327Y-300DEG)

Dimensions (inches)

A	25-15/16
B	45-1/4
C	33-5/16
G	3
T Sq.	30
Roof Open. Sq.*	25-1/2

NOTE: Accessories may affect dimensions shown.

Weight(lbs)***	Shipping	332	Unit	205

* Roof opening size for curbs supplied by Cook only.
***Includes fan, motor & accessories.

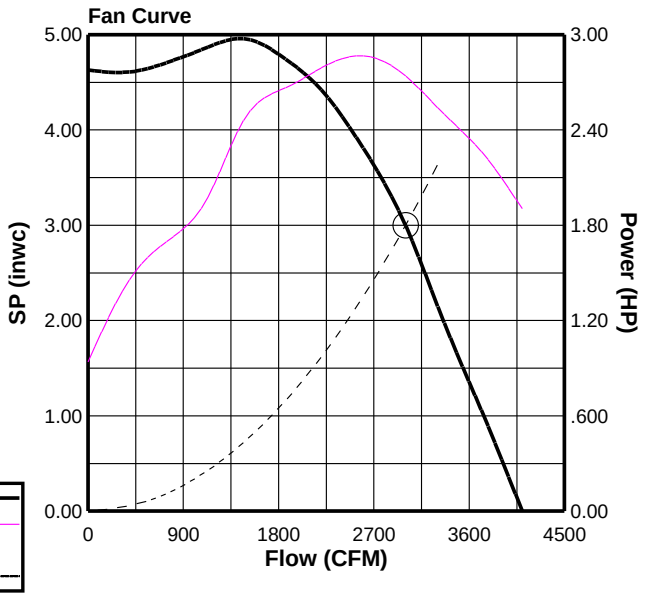

Fan Curve Legend

CFM vs SP	———
CFM vs HP	———
Point of Operation	○
System Curve	- - - -

v9.9.145.0

MARK: EF-4
PROJECT: PS 320X FAN SELECTIONS
DATE: 6/26/2018

SQN-B

Centrifugal Square Inline
Belt Drive

STANDARD CONSTRUCTION FEATURES:
All aluminum wheel - Galvanized steel housing - Three removable access doors - Closed cell neoprene gasketing - Inlet and discharge duct collars - Universal mounting feet - Regreasable bearings in a cast housing rated at 200,000 hours average life - Permanently lubricated ball bearing motor - Adjustable pitch drives through 5 HP - All fans factory adjusted to specified fan RPM - Transit tested packaging.

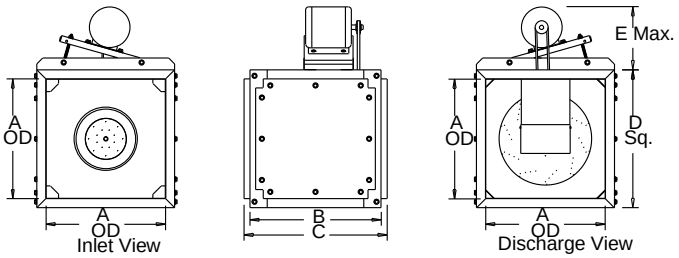

Performance (*Bhp includes 17% drive loss)

Qty	Catalog Number	Flow (CFM)	SP (inwc)	Fan RPM	Power* (HP)	FEG
1	70SQN-B	200	.750	1940	.146	n/a(<1HP)

Altitude (ft): 0 Temperature (F): 70

Motor Information

HP	RPM	Volts/Ph/Hz	Enclosure	FLA	Mounted
1/6	1725	115/1/60	ODP -SE	4.4	Yes

FLA based on NEC (2014) Table 430.248

Sound Data **Sound Power by Octave Band**

	1	2	3	4	5	6	7	8	LwA	dBA	Sones
Inlet	75	77	74	69	63	57	52	46	71	59	9.5
Outlet	89	83	74	71	68	64	58	50	74	63	13.4

Accessories:
DRIVES (1.5 SF) @ 1940 RPM

Dimensions (inches)

A	12
B	20
C	22
D	14
E	12-1/2

NOTE: Accessories may affect dimensions shown.

Weight(lbs)***	Shipping	94	Unit	29

***Includes fan, motor & accessories.

Fan Curve

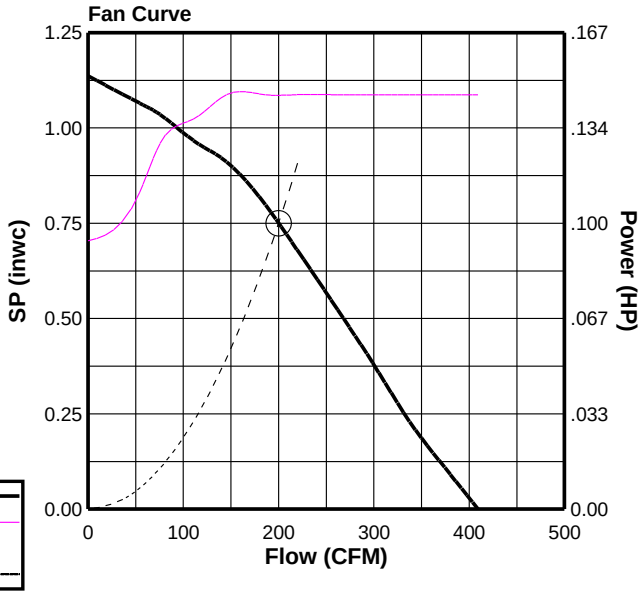

Fan Curve Legend

CFM vs SP	———
CFM vs HP	———
Point of Operation	○
System Curve	- - - -

v9.9.145.0

MARK: SPF-1
PROJECT: PS 320X FAN SELECTIONS
DATE: 9/25/2018

AFB-H

Tube Axial Fan
Horizontal Ceiling Mount
High Temperature Construction
Belt Drive

STANDARD CONSTRUCTION FEATURES:
High temperature steel construction 500 degrees F maximum airstream temperature - Fabricated steel prop - Minimum 12 ga. steel housing - Extended lube lines - Regreasable bearings in cast pillow block housing with high temperature grease - Bearing heat sinks - Heat slinger - Motor heat deflection plate.

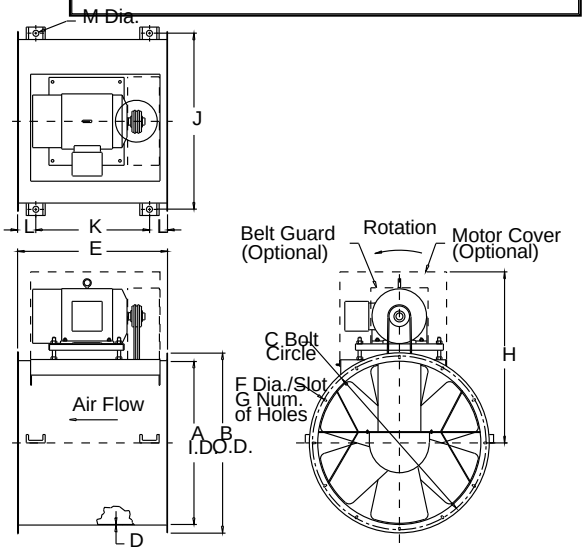

Performance (*Bhp includes drive loss)

Qty	Catalog Number	Flow (CFM)	SP (inwc)	Fan RPM	Power* (HP)	FEG
1	12AFBH	2500	1.50	3708	1.38	56

Altitude (ft): 0 Temperature (F): 70

Motor Information

HP	RPM	Volts/Ph/Hz	Enclosure	FLA	Mounted
1-1/2	3450	208/1/60	ODP -SE	11	Yes

FLA based on NEC (2014) Table 430.248

Fan Information

Level	OVel(mph)	Fan Mount
1	31.4	Horz. Ceiling

Sound Data Outlet Sound Power by Octave Band

1	2	3	4	5	6	7	8	LwA	dBA
97	100	99	96	92	88	86	80	98	87

Accessories:
DRIVES (1.5 SF) @ 3708 RPM
CEILING SUSPENSION

Notes:
Drive Loss Included

Dimensions (inches)

A I.D.	12-7/8	L	3-1/2
B O.D.	15-5/8	M	3/8
C	14-5/8		
D	12 Ga.		
E	22		
F	5/16		
G	6		
H	24-5/8		
J	15		
K	15		

NOTE: Accessories may affect dimensions shown.

Weight(lbs)***	Shipping	123	Unit	123

***Includes fan, motor & accessories.

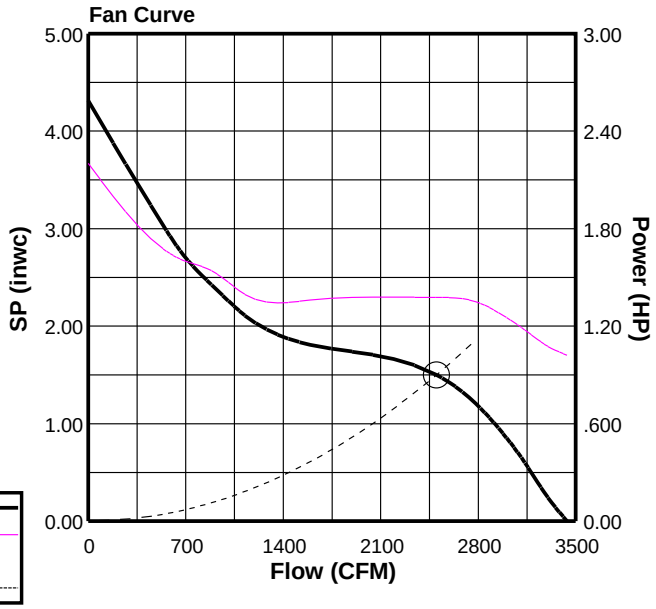

Fan Curve Legend

CFM vs SP	———
CFM vs HP	———
Point of Operation	○
System Curve	- - - - -

v9.9.145.0

HOT WATER FIN TUBE RADIATOR, CONVECTORS AND CABINET UNIT HEATERS

BY

MANUFACTURER

VULCAN

DURA ANE II

Submittal

JD 4 14 20 & 24
Dura ane II Architectural Copper/Aluminum and Steel Elements

☐ **JDV4 Slip Jointed Enclosure**

Specification

ENCLOSURE:

STYLE: Dura ane II
OUTLET: Extruded Aluminum Pencil Proof

LENGTHS: 2' thru 8' in 6" Increments
MAT'L: ☐ 16 Ga. CRS STD.
☐ 14 Ga. CRS (Opt'l)
FINISH ☐ Baked Enamel Std.
☐ 16 Ga. Stainless Steel (Opt'l)
☐ 14 Ga. Stainless Steel (Opt'l)
☐ 14 Ga. Aluminum (Opt'l)
☐ 12 Ga. Aluminum (Opt'l)

ACCESSORIES:

☐ JD 4 Overlapping Type
All accessories have finger tabs at the bottom for easy installation.

ELEMENT:

TYPE: ☐ Cu/Al (Mechanically Expanded)
LENGTHS: 2'0" thru 12'6" in 1" Increments for 1" & 1-1/4" Cu.
2' thru 8' in 1" Increments for 3/4" Cu.

One End Flared, Std.

TYPE: ☐ IPS Steel (Mechanically Expanded)
LENGTHS: 2'0" thru 12'6" in 1" Increments
☐ NPT Thread both Ends Std.
☐ Beveled Ends for Field Weld
See Catalog for Working Pressures

BACKPLATE:

TYPE: ☐ Partial B/P
LENGTHS: 8' Only
MAT'L: ☐ 20 Ga. Prepainted Std.
☐ 18 Ga. Galvannealed (Opt'l)

☐ Full Ht. B/P (Opt'l)
2' thru 8' in 6" increments
☐ 20 Ga. Galvannealed (Opt'l)
☐ 18 Ga. Painted (Opt'l)

AIRSEAL:

☐ 1/8" x 3/8" Closed Cell (Opt'l)

BRACKETS:

☐ Water Brakt w/B.B.
☐ Steam Brkt w/Brkt Mtd B.B. Hngr

ELEMENT TUBE SIZE	CRADLE NO.	A MIN.
3/4 COPPER	2	3
1" COPPER	2	3 3/16
1 1/4 COPPER	2	3 5/16
1 1/4 STEEL	2	3 1/2
2" STEEL	1	3 1/4

☐ **JD 24**

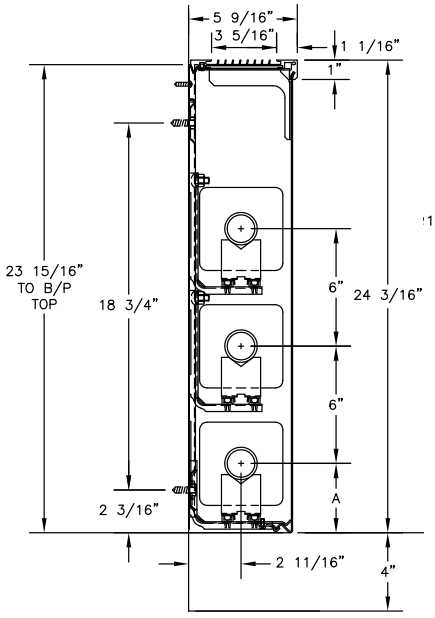

☐ **JD 20**

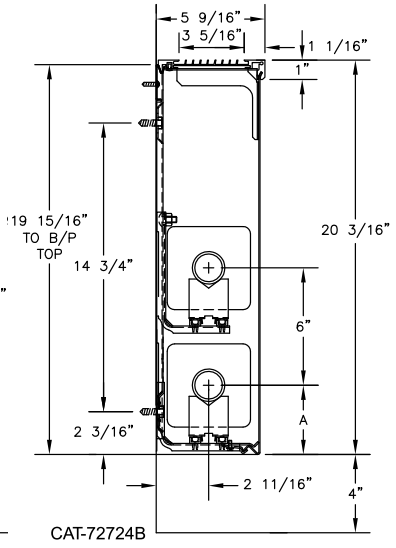

CAT-72724B

☐ **JD 1**

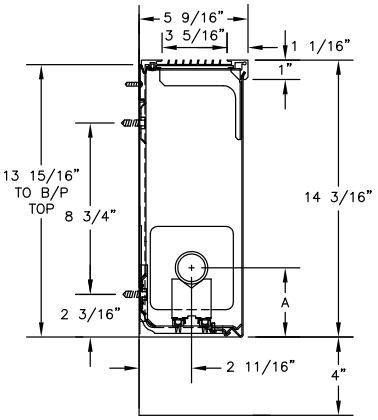

Vulcan RADIATOR
MADE IN THE USA
260 North Elm St., Westfield, MA 01085
(413) 568-9571 Fax: (413) 564-5661
www.vulcanrad.com

2/11

PROJECT: _____ **DATE:** _____
LOCATION: _____
ARCHITECT: _____
ENGINEER: _____
CONTRACTOR: _____
PO NUMBER: _____

ST LES JDV4 14 20 & 24 DU V E II

COP ER/ALUMINUM ELEMEN					ENCLOSURE DE H	ENCLOSURE HEIGHT	IERS AND CENTERS	MTG. HEIGHT	S EAM 215°	Hot Water (AVG.)					
										200°	190°	180°	170°	160°	150°
UBE SIZE	CA ALOG DESIGNA ION	FIN SIZE IN INCHES	FIN/F	FIN HICKNESS	IN INCHES	IN INCHES	IN INCHES	IN INCHES	FACTOR 1.00	Factor 0.86	0.78	0.69	0.61	0.53	0.45
3/4"	VC3/4-434	4-1/4 x 3-5/8	40	0.020"	5-9/16	14-3/16	1	18-3/16	1620	1390	1260	1120	990	860	730
						20-3/16	1	24-3/16	1710	1470	1330	1180	1040	910	770
						"	2-6 CL	"	2390	2060	1860	1650	1460	1270	1080
						24-3/16	1	28-3/16	1800	1550	1400	1240	1100	950	810
						"	2-6 CL	"	2490	2140	1940	1720	1520	1320	1120
						"	2-10 CL	"	2550	2190	1990	1760	1560	1350	1150
3/4"	VC3/4-435	4-1/4 x 3-5/8	50	0.020"	5-9/16	14-3/16	1	18-3/16	1780	1530	1390	1230	1090	940	800
						20-3/16	1	24-3/16	1940	1670	1510	1340	1180	1030	870
						"	2-6 CL	"	2400	2060	1870	1660	1460	1270	1080
						24-3/16	1	28-3/16	2080	1790	1620	1440	1270	1100	940
						"	2-6 CL	"	2530	2180	1970	1750	1540	1340	1140
						"	2-10 CL	"	2660	2290	2070	1840	1620	1410	1200
1"	VC433	4-1/4 x 3-5/8	32	0.020"	5-9/16	14-3/16	1	18-3/16	1410	1210	1100	970	860	750	630
						20-3/16	1	24-3/16	1450	1250	1130	1000	880	770	650
						"	2-6 CL	"	2320	2000	1810	1600	1420	1230	1040
						24-3/16	1	28-3/16	1480	1270	1150	1020	900	780	670
						"	2-6 CL	"	2410	2070	1880	1660	1470	1280	1080
						"	2-10 CL	"	2460	2120	1920	1700	1500	1300	1110
1"	VC434	4-1/4 x 3-5/8	40	0.020"	5-9/16	14-3/16	1	18-3/16	1690	1450	1320	1170	1030	900	760
						20-3/16	1	24-3/16	1800	1550	1400	1240	1100	950	810
						"	2-6 CL	"	2510	2160	1960	1730	1530	1330	1130
						24-3/16	1	28-3/16	1890	1630	1470	1300	1150	1000	850
						"	2-6 CL	"	2660	2290	2070	1840	1620	1410	1200
						"	2-10 CL	"	2770	2380	2160	1910	1690	1470	1250
1"	VC435	4-1/4 x 3-5/8	50	0.020"	5-9/16	14-3/16	1	18-3/16	1850	1590	1440	1280	1130	980	830
						20-3/16	1	24-3/16	2030	1750	1580	1400	1240	1080	910
						"	2-6 CL	"	2510	2160	1960	1730	1530	1330	1130
						24-3/16	1	28-3/16	2170	1870	1690	1500	1320	1150	980
						"	2-6 CL	"	2660	2290	2070	1840	1620	1410	1200
						"	2-10 CL	"	2770	2380	2160	1910	1690	1470	1250
1-1/4"	VC1433	4-1/4 x 3-5/8	32	0.020"	5-9/16	14-3/16	1	18-3/16	1380	1190	1080	950	840	730	620
						20-3/16	1	24-3/16	1420	1220	1110	980	870	750	640
						"	2-6 CL	"	2280	1960	1780	1570	1390	1210	1030
						24-3/16	1	28-3/16	1450	1250	1130	1000	880	770	650
						"	2-6 CL	"	2370	2040	1850	1640	1450	1260	1070
						"	2-10 CL	"	2410	2070	1880	1660	1470	1280	1080
1-1/4"	VC1434	4-1/4 x 3-5/8	40	0.020"	5-9/16	14-3/16	1	18-3/16	1660	1430	1290	1150	1010	880	750
						20-3/16	1	24-3/16	1760	1510	1370	1210	1070	930	790
						"	2-6 CL	"	2460	2120	1920	1700	1500	1300	1110
						24-3/16	1	28-3/16	1850	1590	1440	1280	1130	980	830
						"	2-6 CL	"	2600	2240	2030	1790	1590	1380	1170
						"	2-10 CL	"	2730	2350	2130	1880	1670	1450	1230
1-1/4"	VC1435	4-1/4 x 3-5/8	50	0.020"	5-9/16	14-3/16	1	18-3/16	1760	1510	1370	1210	1070	930	790
						20-3/16	1	24-3/16	1920	1650	1500	1300	1170	1020	860
						"	2-6 CL	"	2370	2040	1850	1640	1450	1260	1070
						24-3/16	1	28-3/16	2050	1760	1600	1420	1250	1090	920
						"	2-6 CL	"	2500	2150	1950	1730	1530	1330	1130
						"	2-10 CL	"	2630	2260	2050	1820	1600	1390	1180

ST LES JDV4 14 20 & 24 DU V E II

COP ER/ALUMINUM ELEMEN					ENCLOSURE DE H IN INCHES	ENCLOSURE HEIGH IN INCHES	IERS AND CEN ERS IN INCHES	MTG. HEIGH IN INCHES	S EAM 215° FAC OR 1.00	Hot Water (AVG.)					
										200°	190°	180°	170°	160°	150°
UBE SIZE	CA ALOG DESIGNA ION	FIN SIZE IN INCHES	FIN/F	FIN HICKNESS						Factor					
										0.86	0.78	0.69	0.61	0.53	0.45
1"	VC43	4-1/4" SQ.	32	0.020"	5-9/16	14-3/16	1	18-3/16	1470	1260	1150	1010	900	780	660
						20-3/16	1	24-3/16	1540	1320	1200	1060	940	820	690
						"	2-6 CL	"	2340	2010	1830	1610	1430	1240	1050
						24-3/16	1	28-3/16	1580	1360	1230	1090	960	840	710
						"	2-6 CL	"	2440	2100	1900	1680	1490	1290	1100
						"	2-10 CL	"	2490	2140	1940	1720	1520	1320	1120
1"	VC44	4-1/4" SQ.	40	0.020"	5-9/16	14-3/16	1	18-3/16	1720	1480	1340	1190	1050	910	770
						20-3/16	1	24-3/16	1810	1560	1410	1250	1100	960	810
						"	2-6 CL	"	2510	2160	1960	1730	1530	1330	1130
						24-3/16	1	28-3/16	1920	1650	1500	1320	1170	1020	860
						"	2-6 CL	"	2600	2240	2030	1790	1590	1380	1170
						"	2-10 CL	"	2660	2290	2070	1840	1620	1410	1200
1"	VC45	4-1/4" SQ.	50	0.020"	5-9/16	14-3/16	1	18-3/16	1900	1630	1480	1310	1160	1010	860
						20-3/16	1	24-3/16	2090	1800	1630	1440	1270	1110	940
						"	2-6 CL	"	2510	2160	1960	1730	1530	1330	1130
						24-3/16	1	28-3/16	2250	1940	1760	1550	1370	1190	1010
						"	2-6 CL	"	2710	2330	2110	1870	1650	1440	1220
						"	2-10 CL	"	2830	2430	2210	1950	1730	1500	1270
1-1/4"	VC143	4-1/4" SQ.	32	0.020"	5-9/16	14-3/16	1	18-3/16	1440	1240	1120	990	880	760	650
						20-3/16	1	24-3/16	1510	1300	1180	1040	920	800	680
						"	2-6 CL	"	2300	1980	1790	1590	1400	1220	1040
						24-3/16	1	28-3/16	1550	1330	1210	1070	950	820	700
						"	2-6 CL	"	2390	2060	1860	1650	1460	1270	1080
						"	2-10 CL	"	2440	2100	1900	1680	1490	1290	1100
1-1/4"	VC144	4-1/4" SQ.	40	0.020"	5-9/16	14-3/16	1	18-3/16	1690	1450	1320	1170	1030	900	760
						20-3/16	1	24-3/16	1780	1530	1390	1230	1090	940	800
						"	2-6 CL	"	2460	2120	1920	1700	1500	1300	1110
						24-3/16	1	28-3/16	1890	1630	1470	1300	1150	1000	850
						"	2-6 CL	"	2550	2190	1990	1760	1560	1350	1150
						"	2-10 CL	"	2620	2250	2040	1810	1600	1390	1180
1-1/4"	VC145	4-1/4" SQ.	50	0.020"	5-9/16	14-3/16	1	18-3/16	1870	1610	1460	1290	1140	990	840
						20-3/16	1	24-3/16	2050	1760	1600	1410	1250	1090	920
						"	2-6 CL	"	2460	2120	1920	1700	1500	1300	1110
						24-3/16	*1	28-3/16	2210	1900	1720	1520	1350	1170	990
						"	2-6 CL	"	2650	2280	2070	1830	1620	1400	1190
						"	2-10 CL	"	2780	2390	2170	1920	1700	1470	1250

STYLES JDV4 14 20 & 24 DUR VANE II

STEEL ELEMENT					ENCLOSURE	ENCLOSURE	TIERS AND	MTG.	STEAM 215°	Hot Water (AVG.)					
										200°	190°	180°	170°	160°	150°
I.P.S. SIZE	CATALOG DESIGNATION	FIN SIZE IN INCHES	FIN/FT	FIN THICKNESS	DEPTH IN INCHES	HEIGHT IN INCHES	CENTERS IN INCHES	HEIGHT IN INCHES	FACTOR 1.00	Factor					
										0.86	0.78	0.69	0.61	0.53	0.45
1-1/4"	†VS143	4-1/4" SQ.	32	0.032"	5-9/16	14-3/16	1	18-3/16	1200	1030	940	830	730	640	540
						20-3/16	1	24-3/16	1260	1080	980	870	770	670	570
						"	2-6 CL	"	2060	1770	1610	1420	1260	1090	930
						24-3/16	1	28-3/16	1300	1120	1010	900	790	690	580
						"	2-6 CL	"	2100	1810	1640	1450	1280	1110	950
						"	2-10 CL	"	2180	1880	1700	1500	1330	1160	980
1-1/4"	†VS144	4-1/4" SQ.	40	0.032"	5-9/16	14-3/16	1	18-3/16	1430	1230	1120	990	870	760	640
						20-3/16	1	24-3/16	1520	1310	1190	1050	930	810	680
						"	2-6 CL	"	2240	1930	1750	1550	1370	1190	1010
						24-3/16	1	28-3/16	1590	1370	1240	1100	970	840	720
						"	2-6 CL	"	2300	1980	1790	1590	1400	1210	1040
						"	2-10 CL	"	2460	2120	1920	1700	1500	1300	1110
2"	†VS242	4-1/4" SQ.	25	0.032"	5-9/16	14-3/16	1	18-3/16	1090	940	850	750	670	580	490
						20-3/16	1	24-3/16	1130	970	880	780	690	600	510
						"	2-6 CL	"	1830	1570	1430	1260	1120	970	820
						24-3/16	1	28-3/16	1150	990	900	790	700	610	520
						"	2-6 CL	"	1850	1590	1440	1280	1130	980	830
						"	2-10 CL	"	1960	1690	1530	1350	1200	1040	880
2"	†VS243	4-1/4" SQ.	32	0.032"	5-9/16	14-3/16	1	18-3/16	1290	1110	1010	890	790	680	580
						20-3/16	1	24-3/16	1330	1140	1040	920	810	710	600
						"	2-6 CL	"	2030	1750	1580	1400	1240	1080	910
						24-3/16	1	28-3/16	1380	1190	1080	950	840	730	620
						"	2-6 CL	"	2060	1770	1610	1420	1260	1090	930
						"	2-10 CL	"	2210	1900	1720	1530	1350	1170	1000

†NPT threads furnished on steel elements. Please use domestic fitings for proper installation.

"4" OFFSET

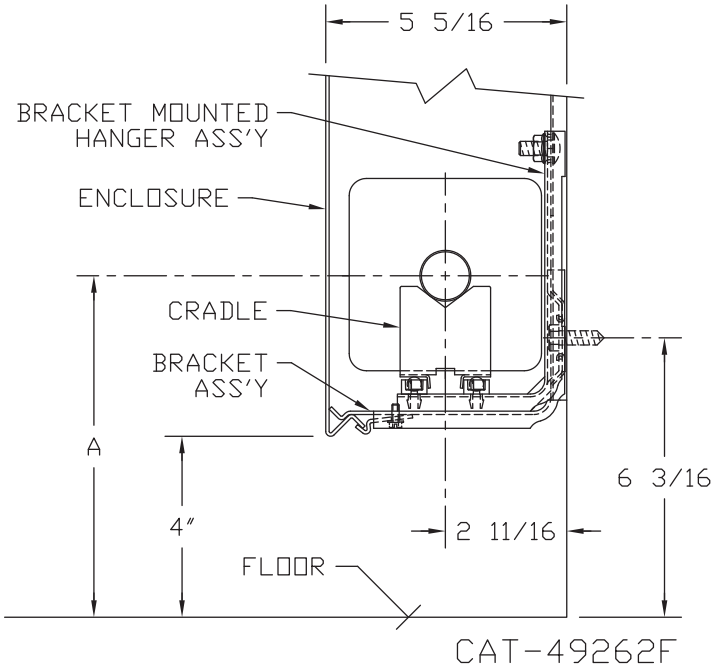

ELEMENT TUBE SIZE	CRADLE NO.	A MIN	A MAX
3/4 COPPER	2	7 3/8	8 3/4
1" COPPER	2	7 1/2	8 7/8
1 1/4 COPPER	2	7 5/8	9"
1 1/4 STEEL	2	7 7/8	9 1/4
2" STEEL	1	7 5/8	9"

CA INET UNIT HEATER SU MITTAL DATA

CBS-RC-15

R c s ed Ceiling Unit - Models RC

PIPING AND MOUNTING CONNECTIONS SHOWN ARE TYPICAL FOR ALL AIR FLOW ARRANGEMENTS S OTH R SID .

FILTER IDENTIFICATION AND DATA		
SIZE	PART NO.	FILTER SIZE
02	PC1297-2	15/32" x 8 11/16" x 19 3/4"
03	PC1297-3	15/32" x 8 11/16" x 27 3/4"
04	PC1297-4	15/32" x 8 11/16" x 31 3/4"
06	PC1297-6	15/32" x 8 11/16" x 43 3/4"
08	PC1297-8	15/32" x 8 11/16" x 45 3/4"
10	PC1297-10	15/32" x 8 11/16" x 50 3/4"
12	PC1297-12	15/32" x 8 11/16" x 57 3/4"
14	PC1297-14	15/32" x 8 11/16" x 69 3/4"

Recessed Ceiling Mounted Units
Models RC

SIZE	DIM "L"	DIM "W"
02	35"	18 1/8"
03	43"	26 1/8"
04	47"	30 1/8"
06	59"	42 1/8"
08	61"	44 1/8"
10	66"	49 1/8"
12	73"	56 1/8"
14	85"	68 1/8"

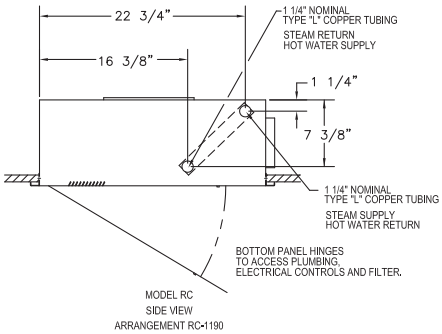

STANDARD ONE ROW COIL
PIPING DIMENSIONS.
(SHOWN ABOVE)

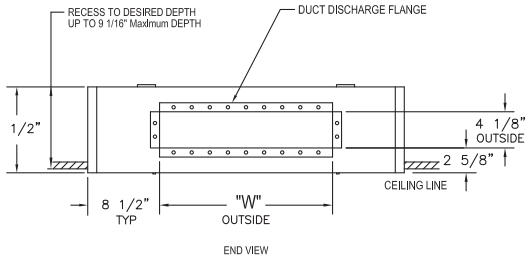

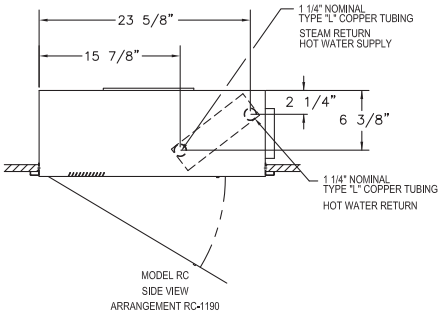

TWO ROW COIL PIPING DIMENSIONS
(SHOWN ABOVE)

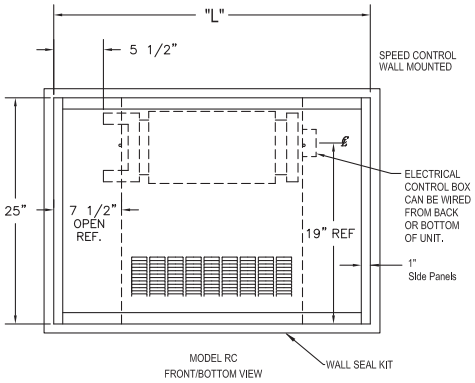

THIS DATA SHEET SHOWS RECESSED CEILING MOUNTED UNITS MODELS "RC".

PIPING AND MOUNTING CONNECTIONS SHOWN ARE TYPICAL FOR ALL AIR FLOW ARRANGEMENTS.

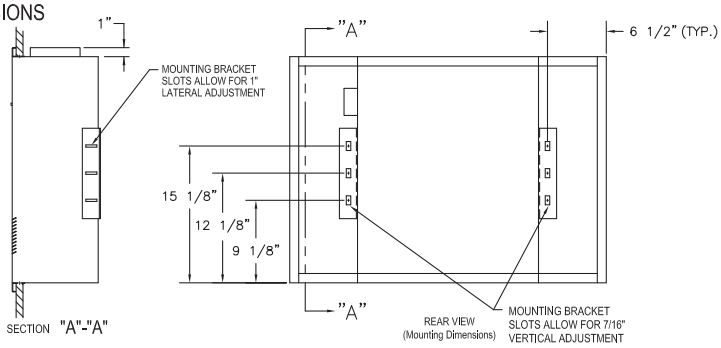

CAT00204C

PROJECT:_____
LOCATION:_____
ARCHITECT:_____
ENGINEER:_____
CONTRACTOR:_____
PO NUMBER:_____
DATE:_____

MADE IN THE USA

Vulcan RADIATOR
260 North Elm St. • Westfield, MA 01085
Tel: (413) 568-9571 • Fax (413) 564-5661
www.vulcanrad.com
A MESTEK COMPANY

CABINET UNIT HEATERS
RATINGS AND SPECIFICATIONS

TABLE 1

ENTERING WATER - 200°F
ENTERING AIR - 60°F

UNIT SIZE		02	03	04	06	08	10	12	14
Heating Cap. - Hot Water 20 WTD	MBH	16.4	22.8	29.8	48.0	54.5	62.0	75.6	78.5
	GPM	1.64	2.28	2.98	4.80	5.46	6.20	7.56	7.85
High Cap. - Coil 2 Row Heating Cap. Hot Water 20 WTD	MBH	25.8	35.4	46.3	69.8	87.6	101.8	119.8	128.6
	GPM	2.58	3.54	4.63	6.98	8.76	10.18	11.98	12.86
Heating Cap. - Steam 2 PSIG	MBH	22.6	31.4	41.0	66.1	75.1	85.4	104.1	108.2
Standard	EDR	94	131	171	276	313	356	434	451
Coil	Cond. LB/HR	23.4	32.5	42.4	68.4	77.7	88.4	107.7	112
Coil:	Number Fins Per Inch	12	12	12	12	12	12	12	12
	Face Area-Ft.^{2}	.97	1.5	1.8	2.6	2.8	3.1	3.6	4.4
	Coil Connections	1-1/4CU	1-1/4CU	1-1/4CU	1-1/4CU	1-1/4CU	1-1/4CU	1-1/4CU	1-1/4CU
Blowers:	Number	1	1	2	2	3	3	4	4
	Diameter/Width (In)	5-3/4 x 7	5-3/4 x 7	5-3/4 x 7	5-3/4 x 7	5-3/4 x 7	5-3/4 x 7	5-3/4 x 7	5-3/4 x 7
Standard PSC Motor:	HP	1/15	1/15	1/10	1/10	1 @ 1/10 1 @ 1/15	1 @ 1/10 1 @ 1/15	1/10	1/10
	RPM: High	1050	1050	1050	1050	1050	1050	1050	1050
	Low	875	875	875	875	875	875	875	875
	Number	1	1	1	1	2	2	2	2
	Volts/Phase/Hertz	115/1/60	115/1/60	115/1/60	115/1/60	115/1/60	115/1/60	115/1/60	115/1/60
	Amperes	0.8	0.8	1.4	1.4	2.2	2.2	2.8	2.8
Fan Speed Control	Standard Mtr	VAR.	VAR.	VAR.	VAR.	VAR.	VAR.	VAR.	VAR.
	CFM: High	230	335	430	630	860	1060	1230	1410
	Low	185	270	345	505	685	845	985	1130
Optional ECM Motor:	HP	1/15	1/15	1/15	1/15	1/10	1/10	1/4	1/4
	Number	1	1	1	1	2	2	2	2
	Volts/Phase/Hertz	120/1/60	120/1/60	120/1/60	120/1/60	120/1/60	120/1/60	120/1/60	120/1/60
	Amperes	0.45	0.45	0.65	0.85	1.5	1.95	2.8	2.8
Fan Speed Control	ECM Mtr	3 - SPEED	3 - SPEED	3 - SPEED	3 - SPEED	3 - SPEED	3 - SPEED	3 - SPEED	3 - SPEED
	CFM: High	230	335	430	630	860	1060	1230	1410
	Med	160	240	375	440	590	740	850	980
	Low	120	150	280	320	450	560	640	730
Filter:	No.	1	1	1	1	1	1	1	1
	Type	PERM.	PERM.	PERM.	PERM.	PERM.	PERM.	PERM.	PERM.
	Length (In)	19-3/4	27-3/4	31-3/4	43-3/4	45-3/4	50-3/4	57-3/4	69-3/4
	Width (In)	8-11/16	8-11/16	8-11/16	8-11/16	8-11/16	8-11/16	8-11/16	8-11/16
	Thickness (In)	1/2	1/2	1/2	1/2	1/2	1/2	1/2	1/2
dB. Level 18" From Unit		50	52	53	54	55	55	56	56
	Length (In)	35	43	47	59	61	66	73	85
	Height (In)	25	25	25	25	25	25	25	25
	Depth (In)	9-1/2	9-1/2	9-1/2	9-1/2	9-1/2	9-1/2	9-1/2	9-1/2

FILTER IDENTIFICATION AND DATA		
SIZE	PART NO.	ILTER SIZE
02	PC1297–2	15/32" x 8 11/16" x 19 3/4"
03	PC1297–3	15/32" x 8 11/16" x 27 3/4"
04	PC1297–4	15/32" x 8 11/16" x 31 3/4"
06	PC1297–6	15/32" x 8 11/16" x 43 3/4"
08	PC1297–8	15/32" x 8 11/16" x 45 3/4"
10	PC1297–10	15/32" x 8 11/16" x 50 3/4"
12	PC1297–12	15/32" x 8 11/16" x 57 3/4"
14	PC1297–14	15/32" x 8 11/16" x 69 3/4"

SIZE	DIM "L"	DIM "W"
02	35"	18 1/8"
03	43"	26 1/8"
04	47"	30 1/8"
06	59"	42 1/8"
08	61"	44 1/8"
10	66"	49 1/8"
12	73"	56 1/8"
14	85"	68 1/8"

CABINET UNIT HEATERS

SHIPPING WEIGHT
(LBS)

	SIZE							
STYLE	**02**	**03**	**04**	**06**	**08**	**10**	**12**	**14**
RC	102	121	135	164	183	194	215	243

RECESSED CEILING	**RC**	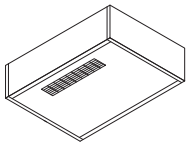	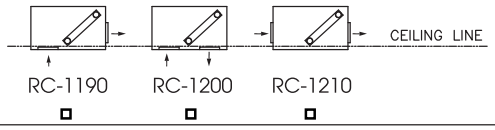

CABINET UNIT HEATERS
HEATING CAPACITIES

☐ **TABLE II — STANDARD COIL**

ENTERING WATER - 200°F
ENTERING AIR - 60°F

UNIT SIZE	GPM	WATER PD/FT	HIGH FAN SPEED				LOW FAN SPEED			
			CFM	MBH	WTD	FAT	CFM	MBH	WTD	FAT
02	.84	.06	230	14.3	34.0	117	185	12.9	30.6	124
	1.0	.06		15.1	30.2	120		13.8	27.6	129
	1.5	.15		16.2	21.6	125		15.0	20.0	135
	2.0	.24		17.4	17.4	130		16.1	16.1	140
	2.5	.36		18.8	15.0	135		17.3	13.8	146
03	1.0	.07	335	21.3	42.6	118	270	19.1	38.2	125
	1.5	.16		22.0	26.6	120		19.8	26.4	128
	2.0	.26		22.7	22.7	122		20.1	20.1	129
	2.5	.39		23.5	18.8	125		20.7	16.6	131
	3.0	.55		23.8	15.8	126		21.1	14.1	132
04	1.0	.07	430	21.8	43.6	106	345	19.0	38.0	111
	2.0	.27		26.6	26.6	117		23.9	23.9	124
	2.5	.41		29.0	23.2	122		25.8	20.5	129
	4.0	1.00		30.9	15.4	126		27.4	13.7	133
	5.0	1.45		32.3	12.9	129		28.3	11.3	136
06	2.0	.30	630	40.4	40.4	119	505	35.7	35.7	125
	3.0	.63		44.8	29.8	125		39.8	26.5	133
	4.0	1.10		47.2	23.6	129		41.9	21.0	136
	5.0	1.60		49.4	19.8	132		43.6	17.5	140
	6.0	2.25		50.7	16.9	134		44.6	15.0	142
08	2.0	.31	860	47.1	47.1	110	685	42.0	42.0	117
	3.0	.64		52.2	34.8	115		46.5	31.0	123
	4.0	1.10		53.9	26.9	117		48.3	24.2	125
	6.0	2.25		56.0	18.6	120		49.1	16.4	126
	8.0	3.85		57.8	14.4	122		51.2	12.8	129
10	3.0	.65	1060	55.8	32.7	109	845	50.2	33.5	115
	4.0	1.15		60.4	30.2	112		53.5	26.8	118
	6.0	2.35		62.2	20.7	114		54.7	18.2	120
	8.0	4.00		64.1	16.0	116		56.3	14.1	121
	10.0	6.0		66.0	13.2	117		58.9	11.8	124
12	4.0	1.20	1230	71.5	35.7	113	985	65.1	32.6	131
	6.0	2.50		74.5	24.8	116		66.6	22.2	133
	8.0	4.20		76.7	19.1	117		68.0	17.0	134
	10.0	6.30		77.7	15.5	118		69.0	13.8	135
	12.0	8.85		78.6	13.1	119		69.7	11.6	136
14	3.5	1.00	1410	71.0	40.6	106	1130	66.3	37.9	114
	4.0	1.30		74.1	37.0	108		68.4	34.2	116
	6.0	2.70		77.6	25.9	111		69.9	23.3	117
	10.0	6.80		80.9	16.2	113		72.5	14.5	119
	12.0	9.55		81.7	13.6	113		73.0	12.2	120

CABINET UNIT HEATERS
HEATING CAPACITIES

☐ **TABLE III — HIGH CAPACITY – 2 ROW COIL**

ENTERING WATER - 200°F
ENTERING AIR - 60°F

UNIT SIZE	GPM	WATER PD/FT	HIGH FAN SPEED				LOW FAN SPEED			
			CFM	MBH	WTD	FAT	CFM	MBH	WTD	FAT
02	1.68	.26	225	23.6	27.9	157	180	21.2	25.3	169
	2.0	.34		24.8	24.8	162		22.5	22.5	175
	2.5	.50		25.7	20.6	165		23.5	18.8	180
	3.0	.73		26.6	18.1	169		23.9	16.0	183
	3.5	.96		27.5	15.9	173		24.8	14.1	187
03	1.68	.27	330	30.3	36.0	149	265	27.3	32.5	155
	2.0	.38		33.1	33.1	152		29.7	29.7	163
	2.5	.56		34.3	27.4	156		30.3	24.2	165
	3.0	.77		34.9	23.3	157		30.8	20.5	167
	3.5	.96		35.3	20.2	159		31.8	18.2	170
04	1.68	.30	420	37.2	43.6	142	335	33.5	39.9	152
	2.0	.44		39.5	39.5	147		35.8	35.8	158
	2.5	.59		42.4	33.9	153		37.8	30.2	164
	4.0	1.41		45.4	22.7	160		39.7	19.9	169
	5.0	2.04		46.8	18.7	163		40.8	16.3	172
06	2.0	.45	620	57.6	57.6	146	495	52.7	52.7	158
	3.0	.93		63.1	42.1	154		57.0	38.0	166
	4.0	1.60		66.0	33.0	158		59.7	29.9	171
	5.0	2.30		69.1	27.6	163		61.2	24.5	174
	6.0	3.30		69.5	23.2	164		62.0	20.7	175
08	2.0	.46	845	67.1	67.1	133	675	58.1	58.1	139
	3.0	.95		75.8	50.5	143		68.2	45.5	153
	4.0	1.65		79.3	39.7	146		71.6	35.8	158
	6.0	3.35		82.6	27.5	150		73.4	24.5	160
	8.0	5.60		86.5	21.6	154		75.8	19.0	163
10	3.0	1.00	1040	84.6	56.4	135	830	75.9	50.6	144
	4.0	1.75		90.6	45.3	140		81.2	40.6	150
	6.0	3.50		94.6	31.5	144		84.0	28.0	153
	8.0	5.90		98.6	24.7	147		86.3	21.6	156
	10.0	8.85		101.6	20.3	150		88.9	17.8	159
12	4.0	1.85	1210	105.3	52.7	140	970	93.3	46.7	149
	6.0	3.75		111.6	37.2	145		100.4	33.5	155
	8.0	6.30		115.3	28.8	148		102.8	25.7	158
	10.0	9.45		118.1	23.6	150		105.0	21.0	160
	12.0	13.20		119.8	20.0	151		106.7	17.8	161
14	4.0	2.05	1385	109.8	54.9	133	1110	100.2	50.1	143
	5.0	3.00		114.8	45.9	136		103.5	41.4	146
	6.0	4.15		118.3	39.4	139		106.6	35.5	149
	10.0	10.45		125.8	25.2	144		111.4	22.3	152
	12.0	14.55		127.9	21.3	145		112.2	18.7	153

SPECIFICATIONS WARRANTY*

*STANDARD CABINET UNIT ONLY

The contractor shall furnish and install Vulcan Cabinet Unit Heaters as selected to meet or exceed job requirements. The Cabinet Unit Heaters will conform to the items listed below and be certified under CSA uidelines.

CABINETS

All cabinets will be constructed with - au e cold rolled steel side panels and top. The front panel shall be furnished in 6- au e cold rolled steel. It will have /2" - /2 pound insulation with one side neoprene coated in front of coil. The internal cabinet shall be furnished in - au e alvanized steel. Adequate work area for installation of control valves or electrical equipment shall be provided on both sides of the internal cabinet.

The cabinet shall be provided with a neutral e shell baked enamel prime coat as standard. (Available if specified) Powder coated baked enamel color selected from standard.

All cabinets shall be supplied with adjustable rear mountin brackets which will provide adjustment to correct ali nment of the unit at installation to non square or out of true walls joists studs or surfaces. Adjustable levelin le s (two each base le) are available when specified.

RECESSED UNITS

All recessed units shall be supplied with a "Wall Seal" assembly. This assembly shall provide protection to the wall or ceilin construction material. The "Wall Seal" shall be supplied in an e shell baked enamel prime coat as standard. (When specified) Baked enamel colors may be selected from standard.

CEILING MOUNT OR RECESSED UNITS

All "C" and " C" units shall be supplied with a hin ed front panel. The multiple hin es shall provide full swin throu h 90°. A safety chain shall be provided as standard to prevent the face panel from swin in fully open accidentally. This chain must be easily detached to allow full access for servicin . Speed control switch will be shipped with wirin dia ram for installation where desired.

FILTERS

All filters supplied as standard shall be reusable aluminum media with a 69% arrestance level. Filters shall be slide in type which are locked into position with a cotter pin.

FANS

Fan wheels shall be centrifu al forward curved double width of electro alvanneal steel. Fan housin s shall be of formed alvanized sheet metal.

COILS

STANDARD ONE ROW - The durable mechanically bonded copper/aluminum coil presents the best of today's hydronic heating technology. All element assemblies are submersion tested at factory at 250 PSI and are rated at a working pressure of 300 PSI. All units are designed so that field modifications can be made to reverse the coil position if required.

HIGH CAPACITY COIL - This is a hot water coil designed to provide increased capacity when the required load exceeds that of the standard coil for a iven size. Its construction is similar to the standard coil however, there are two rows of tubes. Element assemblies are submersion tested at 250 PSI and are rated at a working pressure of 300 PSI.

MOTORS

Standard PSC motors shall have integral thermal protection and start at 78% of rated voltage. Optional PSC High Static motors will be capable of operating in high static conditions up to.4 inches of water column. All motors shall be factory run-tested and assembled in unit prior to shipping. Optional ECM and high static motors will have a solid state control board and a 3 speed switch. All motors shall be factory run-tested and assembled in unit prior to shipping.

ELECTRICAL

All primary internal wiring shall be done at the factory and every unit shall be factory tested for reliability.

FRESH AIR DAMPERS ON DESIGANTED UNITS ONLY

When desired specify either of the following:

. Where noted 25% Manual Outside Air Dampers shall be provided. A manually operated damper quadrant shall provide from 0% to 25% outside air through the use of a single blade damper.

2. Where noted 25% Motorized Outside Air Dampers shall be provided. A synchronous motor (115/60/1) interlocked with the blower shall automatically open the outside air damper when blower starts. The single blade damper shall be adjustable from 0% to 25% outside air. When the blower stops or there is a loss of power, the damper shall return to the closed position. A damper override switch shall be provided to prevent damper operation when desired.

WARRANTY

The products in this catalog are warranted by Vulcan, to be free from defects in material and workmanship for a period of one (1) year from the date of shipment from Vulcan's plant. Vulcan's liability under this warranty is limited to replacing or repairing at our option, F.O.B. our plant any defective component or assembly returned to our factory prepaid and with proper return authorization document. All repairs or replacements are made subject to factory inspection. In the interest of product improvement, Vulcan reserves the right to make changes without notification.

CONVECTOR

Submittal

FWG-A
Front Outlet Cabinet
Recessed
4 Sided Overlap

☐ **FWG-A Louvered Inlet**

Specification

FRONT and LINER:

STYLE: Front Outlet
OUTLET: Stamped Louvers
Pencil Proof

LENGTHS: 20" thru 64" in 4" Increments
MAT'L: Cabinet Front and Liner*
☐ 18 Ga. 20 Ga. CRS STD.
☐ 18 Ga. 18 Ga. CRS (Opt'l)
☐ 16 Ga. 20 Ga. CRS (Opt'l)
☐ 16 Ga. 18 Ga. CRS (Opt'l)
☐ 16 Ga. 16 Ga. CRS (Opt'l)
☐ 14 Ga. 20 Ga. CRS (Opt'l)
☐ 14 Ga. 18 Ga. CRS (Opt'l)
☐ 14 Ga. 16 Ga. CRS (Opt'l)
☐ 14 Ga. 14 Ga. CRS (Opt'l)
*Liner is Galvannealed Steel
FINISH: ☐ Prime Finish Std.
☐ Baked Enamel (Opt'l).
☐ 18 Ga. 20 Ga. SS STD.
☐ 18 Ga. 18 Ga. SS (Opt'l)
☐ 16 Ga. 20 Ga. SS (Opt'l)
☐ 16 Ga. 18 Ga. SS (Opt'l)
☐ 16 Ga. 16 Ga. SS (Opt'l)

ELEMENT:

COIL: Bronze Header 3/4" NPT
w Copper Tube/Alum Fins
(Mechanically Expanded).

HEADER CONNECTIONS:
☐ Single Header Both Ends Std.
☐ Single Inlet 1 End / Dual Inlet 1 End (Opt'l)
☐ Dual Inlet Both Ends (Opt'l)

OPTIONAL ACCESSORIES:

DAMPER: Damper Blades Factory Installed
☐ Knob Damper (Opt'l)
☐ Tamper Resistant (Opt'l)

ACCESS DOORS:
☐ (Opt'l)

INSULATION:
☐ Back Only (Opt'l)
☐ Back, Sides, Top (Opt'l)

PIPING KNOCKOUT:
☐ (Opt'l)

4" END POCKETS:
☐ LH (Opt'l)
☐ RH (Opt'l)
☐ Both Ends (Opt'l)

PERFORATED FRONT: Consult Factory
☐ 16 Ga. (Opt'l)
☐ 14 Ga. (Opt'l)

☐ FWG-A Louvered Inlet

TYPE FWG-A

MODEL	D	L	H	B	J
4xx-18 4xx-20 4xx-24 4xx-26 4xx- 2	4-1 16	20,24,28, 2, 6,40, 44,48,52, 56,60,64,	18 20 24 26 2	2-1/8	4
6xx-18 6xx-20 6xx-24 6xx-26 6xx- 2	6-1 16	20,24,28, 2, 6,40, 44,48,52, 56,60,64,	18 20 24 26 2	3-1/8	6
8xx-18 8xx-20 8xx-24 8xx-26 8xx- 2	8-1 16	20,24,28, 2, 6,40, 44,48,52, 56,60,64,	18 20 24 26 2	4-1/8	8

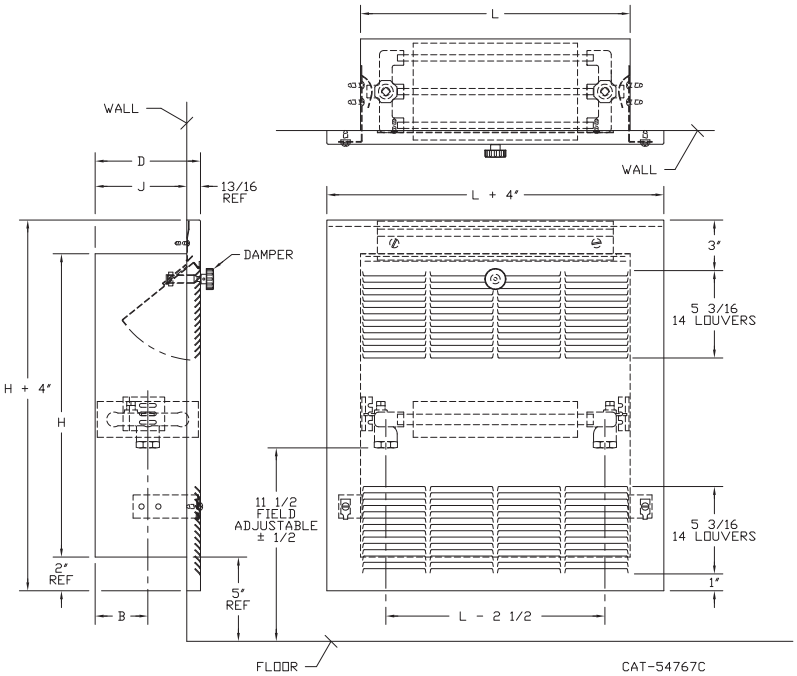

NOTE: When adding end pockets, liner and front length increase.

Vulcan RADIATOR
260 North Elm St., Westfield, MA 01085
(41) 568-9571 Fax: (413) 564-5661
w w.vulcanrad.com

MADE IN THE USA

11/16

PROJECT: _____ **DATE:** _____
LOCATION: _____
ARCHITECT: _____
ENGINEER: _____
CONTRACTOR: _____
PO NUMBER: _____

STEAM RATINGS IN BTU/H (2 ° at 6 ° AT)

DEPTH IN INCHES	LENGTH IN INCHES	FRONT OUTLET, NOMINAL LINER HEIGHT *TYPE FWG-A				
		18"	20"	24"	26"	32"
4	20	2165	2420	2775	2870	3090
	24	2675	3050	3550	3645	3945
	28	3215	3700	4255	4375	4730
	32	3750	4355	5010	5150	5605
	36	4235	5005	5760	5905	6440
	40	4750	5635	6470	6655	7245
	44	5260	6285	7245	7410	8080
	48	5775	6890	7950	8185	8885
	52	6355	7565	8680	8890	9645
	56	6820	8195	9430	9665	10525
	60	7425	8845	10135	10395	11285
	64	7890	9500	10915	11170	12165
6	20	3045	3405	4035	4170	4750
	24	3790	4285	5105	5290	6045
	28	4555	5190	6155	6340	7220
	32	5280	6090	7230	7480	8515
	36	6045	6950	8255	8575	9735
	40	6815	7875	9325	9690	11005
	44	7580	8730	10375	10785	12230
	48	8345	9635	11425	11835	13430
	52	9160	10515	12450	12860	14605
	56	9880	11415	13520	14000	15900
	60	10715	12275	14545	15050	17075
	64	11460	13200	15620	16210	18395
8	20	3670	4130	4685	4775	5400
	24	4650	5240	5915	6115	6890
	28	5810	6335	7140	7345	8265
	32	6880	7445	8390	8660	9755
	36	7930	8540	9665	9955	11200
	40	8975	9675	10935	11225	12665
	44	10045	10765	12140	12500	14110
	48	10875	11770	13390	13770	15600
	52	12250	12950	14575	14975	16900
	56	13300	14110	15890	16340	18440
	60	14350	15155	17050	17520	19765
	64	15265	16270	18370	18905	21300

* Correction factors for BTU performance at different Average Water emperatures, use correction factors from able 3 of the correction Factors page.

For other applicable Correction factors see the Correction Factors page.

CONVECTOR BTU CORRECTION FACTORS

Table 3

CONVECTOR CORRECTION FACTORS Based on Section 35.4 ASHRAE HVAC Systems and Equipment					
AVERAGE WATER TEMPERATURE (°F)	ENTERING AIR TEMPERATURE (°F)				
	55°	60°	(STD) 65°	70°	75°
100°	0.17	0.14	0.12	0.09	0.07
110°	0.23	0.20	0.17	0.14	0.12
120°	0.29	0.26	0.23	0.20	0.17
130°	0.35	0.32	0.29	0.26	0.23
140°	0.43	0.39	0.35	0.32	0.29
150°	0.50	0.46	0.43	0.39	0.35
160°	0.58	0.54	0.51	0.47	0.43
170°	0.67	0.63	0.58	0.54	0.51
180°	0.76	0.71	0.67	0.63	0.58
190°	0.85	0.81	0.76	0.71	0.67
200°	0.95	0.90	0.85	0.81	0.76
210°	1.05	1.00	0.95	0.90	0.85
215° (STD)	1.10	1.05	1.00	0.95	0.90
220°	1.15	1.10	1.05	1.00	0.95
230°	1.26	1.20	1.15	1.10	1.05
240°	1.37	1.32	1.26	1.21	1.15
250°	1.47	1.43	1.37	1.32	1.27

Table 4

CORRECTION FACTORS FOR STEAM PRESSURES OTHER THAN 1 PSI GAUGE*						
	PRESSURE PSI GAUGE					
	5	10	15	20	25	50
FACTOR	1.12	1.25	1.36	1.46	1.56	1.93
*Apply factors shown above to the ratings shown on the 215°F ratings page.						

Note: Max Recommended operating pressure 150 PSIG, (365.9°F).
For conversion from steam to hot water, use correction factors shown in table 3.

Table 5

CORRECTION FACTORS FOR ACCESS DOORS									
Length	Free Standing, Non-Recessed Non-Standard Access Door Locations					Semi-Recessed or Fully Recessed Non-Standard Access Door Lo ations			
	3 or 4	3 & 4	5 or 6	5 & 6		3 or 4	3 & 4	5 or 6	5 & 6
20"	0.940	0.880	0.820	0.650		0.975	0.950	0.925	0.850
24"	0.950	0.910	0.860	0.720		0.980	0.960	0.940	0.880
28"	0.960	0.920	0.890	0.770		0.982	0.968	0.948	0.902
32"	0.970	0.940	0.890	0.800		0.985	0.972	0.955	0.918
36"	0.970	0.940	0.920	0.830		0.988	0.975	0.962	0.925
40"	0.970	0.950	0.920	0.850		0.990	0.978	0.970	0.932
44"	0.980	0.950	0.930	0.860		0.990	0.980	0.970	0.940
48"	0.980	0.960	0.940	0.880		0.990	0.982	0.970	0.948
52"	0.980	0.960	0.950	0.890		0.992	0.985	0.978	0.955
56"	0.980	0.960	0.950	0.890		0.992	0.985	0.978	0.955
60"	0.980	0.970	0.950	0.900		0.992	0.985	0.978	0.955
64"	0.980	0.970	0.950	0.910		0.992	0.988	0.978	0.962

Note: Derating factors do not apply to units with end pockets.

Table 6

WATER FLOW IN GPM	PRESSURE LOSS IN FEET OF WATER		
	4 INCH MODELS	6 INCH MODELS	8 INCH MODELS
.25	0.044	—	—
.50	0.160	0.070	0.046
1	0.597	0.270	0.167
2	2.220	1.047	0.616
3	—	2.260	1.367
4	—	3.793	2.380
5	—	—	3.673

Charted figures showing pressure drop through Convectors with forced hot water. Used for determining pressure head requirement. Based on 64" length units, but applicable to shorter units, as most loss is due to headers.

Table 7

CORRECTION FACTORS FOR INLET GRILLES TYPES: FSG-A, SRG-A, RFG-A, FWG-A, PWG-A, SFG-A			
DEPTH	HEIGHT		
	16", 18", 20"	22", 24", 26"	28", 30", 32"
4"	0.97	0.98	0.99
6"	0.94	0.95	0.98
8"	0.91	0.93	0.97

Due to the restriction to air flow, the correction factor should be multiplied to the BTU output when inlet grilles are specified.

ADDITIONAL CORRECTION FACTORS ON NEXT PAGE

CONVECTOR BTU CORRECTION FACTORS

GALLONS PER MINUTE OF HOT WATER REQUIRED

Table 8

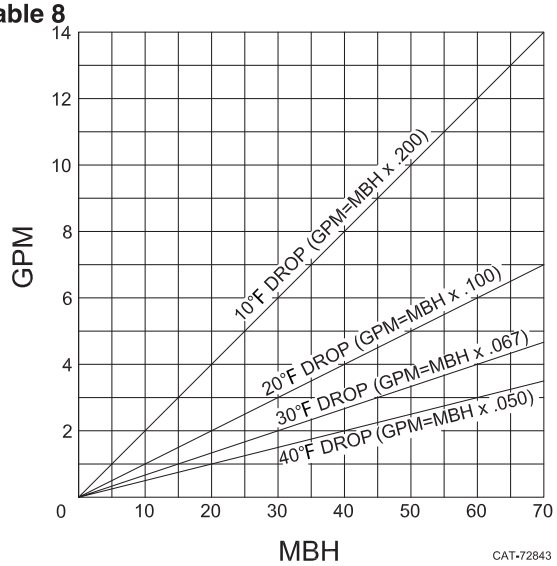

OUTPUT-FLOW RATE CORRECTIONS

Table 9

		Min. Flow Rate (0.25 Ft./Sec.)	MBH Based on T.D. & Min. Flow Rate			
Convector Depth	Tubes per Element	GPM	10TD	20TD	30TD	40TD
4"	2	.15	0.750	1,500	2,250	3,000
6"	3	.225	1.125	2,250	3,375	4,500
8"	4	.30	1.500	3,000	4,500	6,000

NOTE: Table 9 shows MBH which result at specific water temperature drops and minimum water flow rates which are required to maintain turbulent flow within element tubes.

CONVECTOR COIL

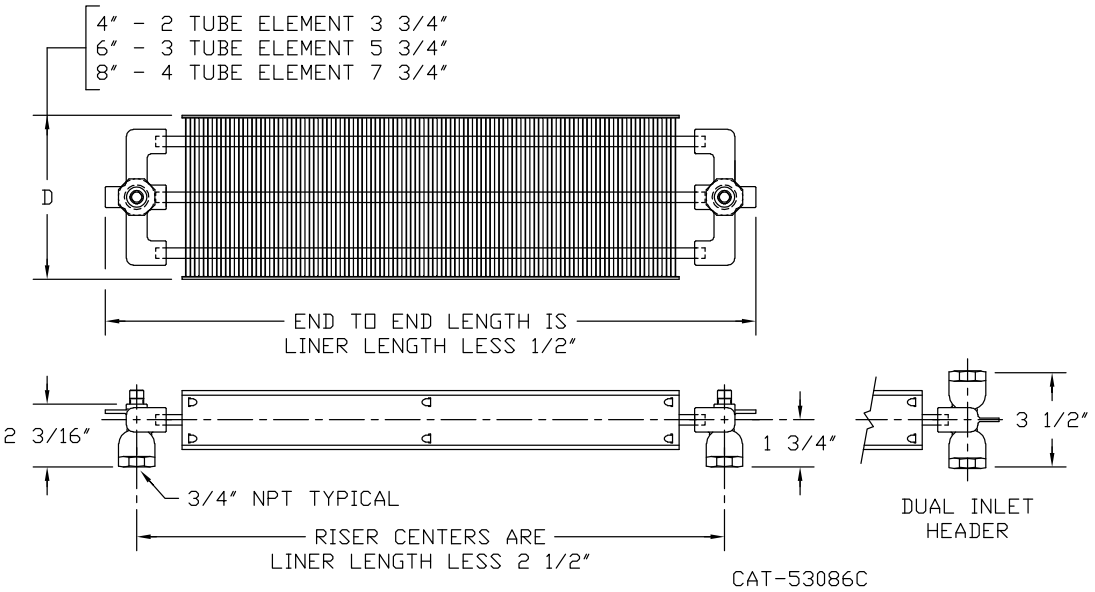

NOTE: When ordering convectors with end pockets always refer to the standard unit length. The overall physical length will increase by 4" for each end pocket. The coil length will remain the standard size. Coil fins are 2-1/2" high by width shown above and are mechanically bonded to copper tube at 6 fins per inch.

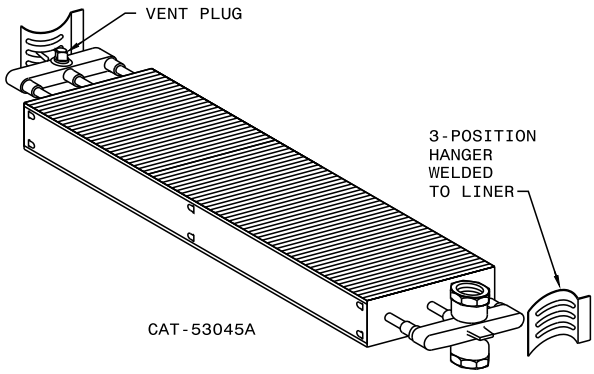

TYPICAL VAV BOX

BY

MANUFACTURER

ANEMOSTAT

Anemostat®
AIR DISTRIBUTION

SUBMITTAL SHEET

www.anemostat-hvac.com

Model **EZTS**
SINGLE DUCT AIR TERMINAL

PRODUCT FEATURES

- AHRI 880 certified / ETL listed as applicable.
- 22 gauge zinc-coated steel, low leakage casing construction sealed to limit leakage to <1% of max rated flow at 3" w.g. static pressure.
  Optional:
  ☐ 20 gauge construction ☐ Ultra Lo-Leak construction
- 1/2" dual density insulation (NFPA 90A, UL 181).
  Optional:
  ☐ 1" dual density glass fiber insulation
  ☐ 1/2" ☐ 1" foil faced glass fiber insulation
  – metal taped edges (AS M C665)
  ☐ 1" Fibre-Lok insulating system – foil faced insulation with steel encapsulated edges (ASTM C665)
  ☐ Double wall construction (1/2" insulation is standard)
  ☐ Lo- emp casing construction
  ☐ 3/8" fiber free closed cell foam insulation (NFPA255, UL181)
  ☐ No insulation
- 90° inlet damper with leak resistant perimeter seal limiting leakage to <1% of max rated flow at 3" w.g. inlet static pressure. (Size 24x16 is Nominal 60° rotation).
- Multi-Point center averaging Velocity Wing air flow sensor for accuracy to ± 5% of design flow. Flow taps for air flow measurement provided with factory mounted controls.
- Slip & drive cleat discharge connection.
- Choice of right hand or left hand control position.
- Optional Accessories:
  ☐ 6 x 6 access plate ☐ Bottom ☐ Side*
  ☐ 6 x 6 access door ☐ Bottom ☐ Side* ☐ Hinged ☐ Double Camlock
  ☐ Unit mounting brackets (field installed)
  ☐ Std. Control enclosure ☐ Screw attached cover ☐ Hinged front cover
  ☐ Large control enclosure ☐ Screw attached cover
- Control System ☐ Electronic Analog ☐ Digital ☐ Pneumatic ☐ Electric
  ☐ None – No controls
- Control Package ☐ Field Installed Controls

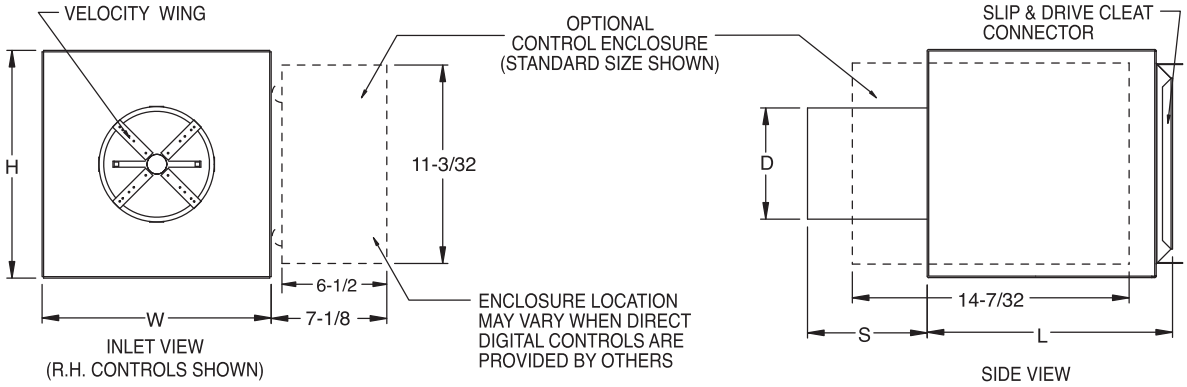

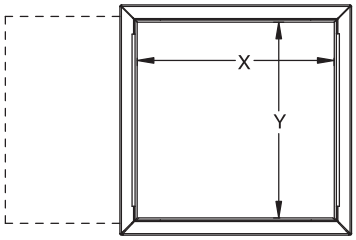

DISCHARGE VIEW

SIZE	D	W	H	X	Y	L	S	EST. WT.
05	4 7/8	10	10	8 3/4	8 3/4	12 1/2	5 3/8	9 LBS
06	5 7/8	10	10	8 3/4	8 3/4	12 1/2	5 3/8	9 LBS
07	6 7/8	12	10	10 3/4	8 3/4	12 1/2	5 3/8	11 LBS
08	7 7/8	12	10	10 3/4	8 3/4	12 1/2	5 3/8	11 LBS
09	8 7/8	14	12 1/2	12 3/4	11 1/4	14 1/2	5 3/8	15 LBS
10	9 7/8	14	12 1/2	12 3/4	11 1/4	14 1/2	5 3/8	15 LBS
12	11 7/8	16	15	14 3/4	13 3/4	18 1/2	5 3/8	19 LBS
14	13 7/8	20	17 1/2	18 3/4	16 1/4	18 1/2	5 3/8	23 LBS
16	15 7/8	24	17 1/2	22 3/4	16 1/4	18 1/2	5 3/8	28 LBS
24 x 16	24 x 16	38	18	38	18	30	5 7/16	79 LBS

NOTES:
- 24 X 16 NOT ILLUSTRATED.
- INLET SENSOR LINE TERMINATIONS ARE 3/8" O.D. WHEN CONTROLS ARE FIELD INSTALLED.

* SIDE ACCESS DOOR IS LOCATED OPPOSITE CONTROL SIDE.

AHRI CERTIFIED®
www.ahridirectory.org
VAV Terminals
AHRI Standard 880

All dimensions are in inches.

JOB NAME: **SUBMITTED BY:**

TYPICAL SPILT AC SYSTEM

BY

MANUFACTURER

MITSUBIDHI

P-SERIES

PKA-A24KA6 & PUZ-A24NHA6 (-BS)

24,000 BTU/H WALL-MOUNTED HEAT-PUMP SYST M

MITSUBISHI ELECTRIC

Job Name:	
System Reference:	Date:

Indoor Unit: PKA-A24KA6

Outdoor Unit: PUZ-A24NHA6 (-BS)

UNIT OPTION:

- Standard Model.....PUZ-A24NHA6
- Seacoast (BS) Model.....PUZ-A24NHA6-BS

ACCESSORIES:

Indoor Unit

- Condensate Pump (BlueDiamond X87-711/721; 115/230V)
- Condensate Pump (Sauermann SI30-115/230; 115/230V)
- Disconnect Switch (TAZ-MS303)
- Wireless Remote Controller (PAR-FL32MA-E)
- Wireless Signal Receiver (PAR-FA32MA-E)

Outdoor Unit

- Wind Baffle (WB-PA2)*

*Allows operation to 0º F (-18º C).

- Air Outlet Guide (PAC-SG59SG-E)
- Mounting Base (QSMS1201)
- Wall Bracket (QSWB2000M-1)

Controls

- Wireless Controller (MHK1)
- Advanced Wired Controller (PAR-31MAA)
- Simple Wired Controller (PAC-YT53CRAU)
- M-NET Adapter (PAC-SF83MA-E)
- Temperature Sensor (PAC-SE41TS)

SPECIFI ATIONS:

Rated Conditions (Capacity / Input)*		
Cooling	Btu/h / W	24,000 / 2,270
Heating at 47º F	Btu/h / W	26,000 / 2,330
Heating at 17º F	Btu/h / W	18,000 / 2,200

* Rating Conditions per AHRI Standard:
Cooling | Indoor: 80º F (27º C)DB / 67º F (19º C)WB; Outdoor: 95º F (35º C)DB / 75º F (24º C)WB
Heating at 47ºF | Indoor: 70º F (21º C)DB / 60º F (16º C)WB; Outdoor: 47º F (8º C)DB / 43º F (6º C)WB
Heating at 17º F | Indoor: 70º F (21º C)DB / 60º F (16º C)WB; Outdoor: 17º F (-8º C)DB / 15º F (-9º C)WB

Capacity Range		
Cooling	Btu/h	12,000 - 24,000
Heating at 47º F	Btu/h	12,000 - 28,000

Operating Range	
Cooling	0º F** to 115º F (-18º C to 46º C) DB
Heating	12º F to 70º F (-11º C to 21º C) DB

** The minimum temperature will be 23º F (-5º C) DB if optional wind baffle accessory is not installed.

AHRI Efficiency Ratings	
EER	10.6
SEER	17.0
HSPF	10.8
COP at 4 º F	3.27
COP at 1 º F	2.40

Electrical Power Requirements	208 / 230V, 1-Phase, 60 Hz

Minimum Circuit Ampacity (MCA)		
Indoor / Outdoor	A	1 / 18

Indoor Unit		
Blower Motor (ECM)	F.L.A.	0.36
Blower Motor Output	W	56
SHF / Moisture Removal		0.77 / 5.0 pt./h

Outdoor Unit		
Compressor		DC INVERTER-driven Twin Rotary
Fan Motor (ECM)	F.L.A.	0.75
MOCP	A	30

Airflow Rate (Low-Mid-High)			
Indoor (Cooling)	DRY	CFM	635-705-775
	WET		570-635-700
Outdoor	DRY		1,940

Sound Pressure Level			
Indoor (Low-Mid-High)		dB(A)	39-42-45
Outdoor	Cooling		48
	Heating		50

External Dimensions		
Indoor (H x W x D	In.(mm)	14-3/8 x 46-1/16 x 11-5/8 365 x 1,170 x 295)
Outdoor (H x W x D		37-1/8 x 37-3/8 x 13 + 1-3/16 943 x 950 x 330 + 30)

Net Weight		
Indoor	Lbs.(kg)	46 (21)
Outdoor		165 (75)

External Finish	
Indoor	Munsell No. 1.0Y 9.2 / 0.2
Outdoor	Munsell No. 3Y 7.8 / 1.1

Refrigerant	R410A ; 6lbs., 10oz.

Refrigerant Piping Flared		
Liquid (High Pressure)	In.(mm)	3/8 (9.52)
Gas (Low Pressure		5/8 (15.88)
Maximim Total Refrigerant Pipe Length	Ft. (m)	165 (50)
Maximum Vertical Separation	Ft. (m)	100 (30)

Specifications are subject to change without notice.

© 2015 Mitsubishi Electric US, Inc.

DIMENSIONS: PKA-A24KA6 & PUZ-A24NHA6 (-BS)

PKA-A24KA6

Unit: inch (mm)

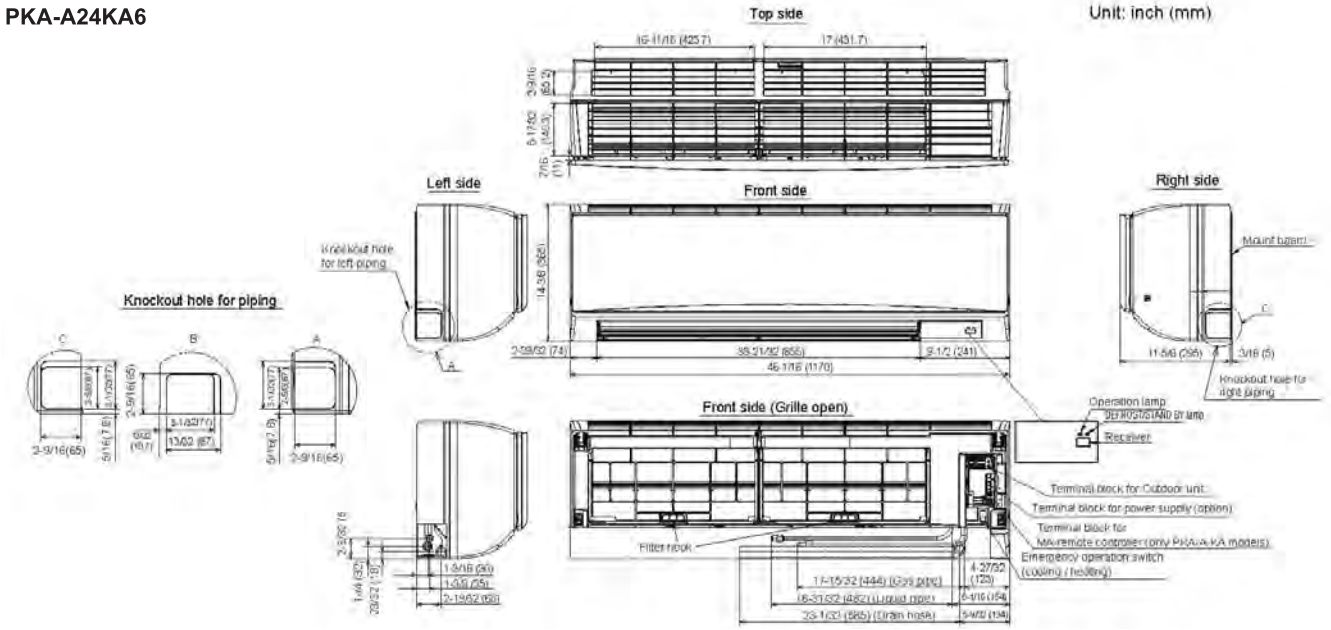

PUZ-A24NHA6 (-BS)

Unit: mm (inch)

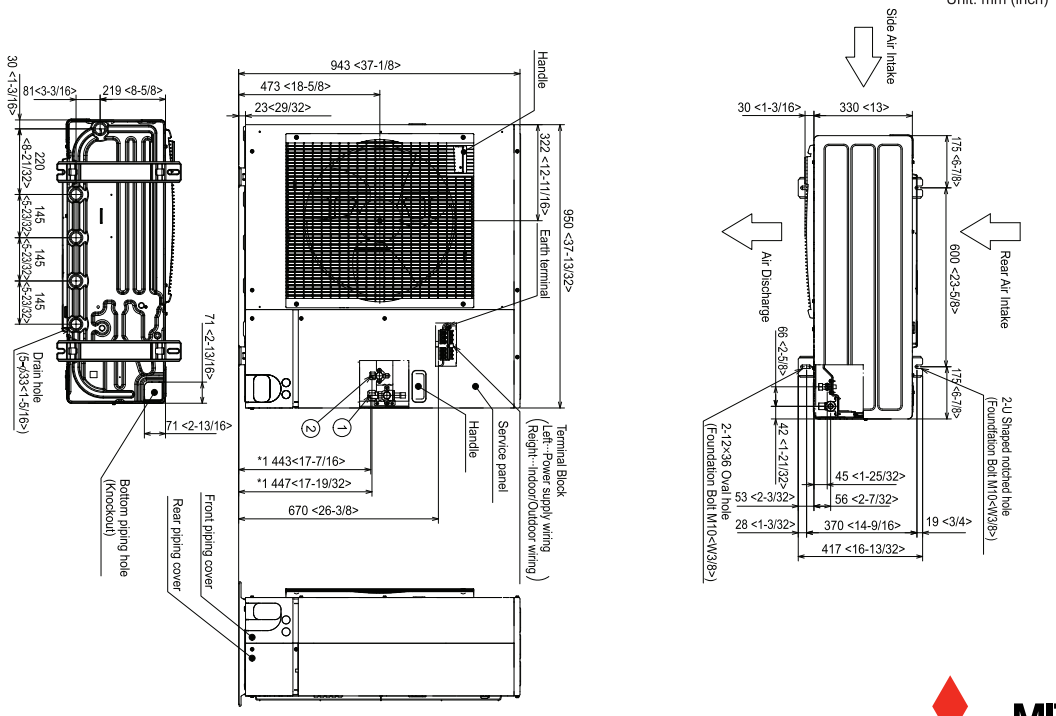

NOTES:
SEACOAST PROTECTION

- External Outer Panel: Phosphate coating + Acrylic-Enamel coating
- Fan Motor Support: Epoxy resin coating (at edge face)
- Separator Assembly ; Valve Bed: Epoxy resin coating (at edge face)
- Screws (used outer side): Zinc nickel coating 5μm + Polyvinylidene chloride coating

"Blue Fin" treatment is an anti-corrosion treatment that is applied to the condenser coil to protect it against airborne contaminants..

MITSUBISHI ELECTRIC
COOLING & HEATING

1340 Satellite Boulevard. Suwanee, GA 30024
Toll Free: 800-433-4822 www.mehvac.com

AHRI CERTIFIED www.ahridirectory.org Unitary Small HP AHRI Standard 210/240

Intertek

FORM# PKA-A24KA6 - PUZ-A24NHA6 (-BS) - 201507
Specifications are subject to change without notice.

© 2015 Mitsubishi Electric US, Inc.

MITSUBISHI ELECTRIC
COOLING & HEATING

P-SERIES

SUBMITTAL DATA: PKA-A36KA4 & PUZ-HA36NHA4

33,400 BTU/H WALL-MOUNTED HYPER HEAT-PUMP SYSTEM

Job Name:	
System Reference:	Date:

Indoor Unit: PKA-A36KA4

Outdoor Unit: PUZ-HA36NHA4

GENERAL FEATURES

- Innovative flash technology enables high heating capacity at lower outside temperatures
- Exhibits 100% of rated heating capacity at 5º F; 90% of rated heating capacity at -4º F
- Qui op ra ion
- Automatic fan speed control
- Auto restart following a power outage
- Self-check function—integrated diagnostics
- Limited warranty: five years parts and defects and seven years compressors

ACCESSORIES

Indoor Unit

□ Con n a ump (Saurmann S130-220)

Outdoor Unit

□ M-NE A ap r (AC-SF82MA-E)
□ Wind Baffle (One Piece)* (WB-PA2)
□ Air Outlet Guide (One Piece)* (PAC-SG59SG)
*PUY(Z) requires two outlet guides or wind baffles for installation.

Controller Options

□ Wireless Wall-mounted Remote Controller Kit (MHK1)**
□ Portable Central Controller (MCCH1)**
□ Outdoor Air Sensor (MOS1)**
□ Wired Wall-mounted Controller (PAR-31MAA)**
□ Simple MA Remote Controller (PAC-YT53CRAU)**
**See Submittal for information on each option.
□ M-NE A ap r (AC-SF81MA)
□ CN24 Relay Kit (CN24RELAY-KIT-CM3)
□ Remote Temperature Sensor (PAC-SE41TS)
□ Hand-held Wireless Remote Controller (PAR-FL32MA; req. PAR-FA32MA-E)
□ Wireless Signal Receiver Module (PAR-FA32MA-E)

Specifications are subject to change without notice.
© 2014 Mitsubishi Electric US, Inc.

SPECIFICATIONS: PKA-A36KA4 & PUZ-HA36NHA4

Cooling*
Rated Capacity. . . . . 33,400 Btu/h
Minimum Capacity . . . . . 18,000 Btu/h
SEER . . . . . .16.2 Btu/h/W
Total Input. . . . . .2,790 W

Heating at 47°F*
Rated Capacity. . . . . 38,000 Btu/h
Minimum Capacity . . . . . 18,000 Btu/h
HSPF (IV). . . . . .10.0 Btu/h/W
Total Input. . . . . .3,410 W

Heating at 17°F*
Rated Capacity. . . . . 25,000 Btu/h
Rated Total Input . . . . . .3,330 W
Maximum Capacity . . . . . 38,000 Btu/h
Total Input. . . . . .6,010 W

Heating at 5°F
Maximum Capacity . . . . . 38,000 Btu/h
Total Input. . . . . .6,760 W

*** Rating Conditions per AHRI Standard**
Cooling | Indoor: 80º F (27º C) DB / 67º F (19º C) WB
Cooling | Outdoor: 95º F (35º C) DB / 75º F (24º C) WB
Heating at 47º F | Indoor: 70º F (21º C) DB / 60º F (16º C) WB
Heating at 47º F | Outdoor: 47º F (8º C) DB / 43º F (6º C) WB
Heating at 17º F | Indoor: 70º F (21º C) DB / 60º F (16º C) WB
Heating at 17º F | Outdoor: 17º F (-8º C) DB / 15º F (-9º C) WB
Heating at 5º F | Indoor: 70º F (21º C) DB / 60º F (16º C) WB
Heating at 5º F | Outdoor: 5º F (-15º C) DB / 5º F (-15º C) WB

**** Maximum Capacity is at full speed and performance for INVERTER-driven System.**

Electrical Requirements
Power Supply. . . . . .208 / 230V, 1-Phase, 60 Hz
Breaker Size. . . . . .30 A

Voltage
Indoor - Outdoor S1-S2 . . . . . AC 208 / 230V
Indoor - Outdoor S2-S3 . . . . . DC ±24V
Remote Controller . . . . . MKH1 DC 12V
PAR-21MAAU DC 12V
PAR-FL32MA DC 3V

OPERATING RANGE

		Indoor Intake Air Temp.	Outdoor Intake Air Temp.
Cooling	Maximum	90º F (32º C) DB 73º F (23º C) WB	115º F (46º C) DB
	Minimum	66º F (19º C) DB 59º F (15º C) WB	0º F** (18º C) DB
Heating	Maximum	83º F (28º C) DB	70º F (21º C) DB 59º F (15º C) WB
	Minimum	63º F (17º C) DB	-13º F (-25º C) DB -13º F (-25º C) WB

** With optional wind baffle accessory installed. If not installed, the minimum temperature will be 23º F (-5º C) DB.

Indoor Unit
MCA . . . . . 1 A
Blower Motor (ECM) . . . . . 0.57 F.L.A.
Blower Motor Output . . . . . .56 W
Airflow (Lo Mid i) . . . . . .705 810 920 Dry CFM
6 5 7 0 8 0 Wet CFM
Sound Pressure Level (Lo Mid i) . . . . . 6 9 dB(A)

DIMENSIONS	UNIT INCHES / MM
W	6 1/16 / 1,170
D	11 5/8 / 295
H	1 /8 / 65

Weight . . . . . 46 lbs. / 21 kg
Extern I Finish . . . . . Munsell No. 1.0Y 9.2 / 0.2
Field Dr inpipe Size I.D. . . . . .5/8" / 16 mm

Outdoor Unit
Compressor . . . . . DC Inverter driven Scroll
MCA 28
Fan Motor (ECM). . . . . 0. + 0. F.L.A.
Sound Pressure Level
Cooling . . . . . 52 dB(A)
e ting . . . . . 5 dB(A)

DIMENSIONS	INCHES / MM
W	37 /8 / 950
D	1 + 1 /16 / 0 + 0
H	5 1/8 / 1, 50

Weight . . . . . 265 lbs. / 120 kg
Extern I Finish . . . . . Munsell No. Y 7.8 / 1.1
efriger nt Type. 10A
efriger nt Pipe Size O.D.
Gas Side . . . . . 5/8" / 15.88 mm
Liquid Side . . . . . 3/8" / 9.52 mm
Max. efriger nt Pipe Length . . . . . .2 5' / 75 m
Max. efriger nt Pipe eight Difference . . . . . .100' / 0 m
Connection Method . . . . . .Fl red

Notes:

Specifications are subject to change without notice.
© 2014 Mitsubishi Electric US, Inc.

DIMENSIONS PKA-A36KA4

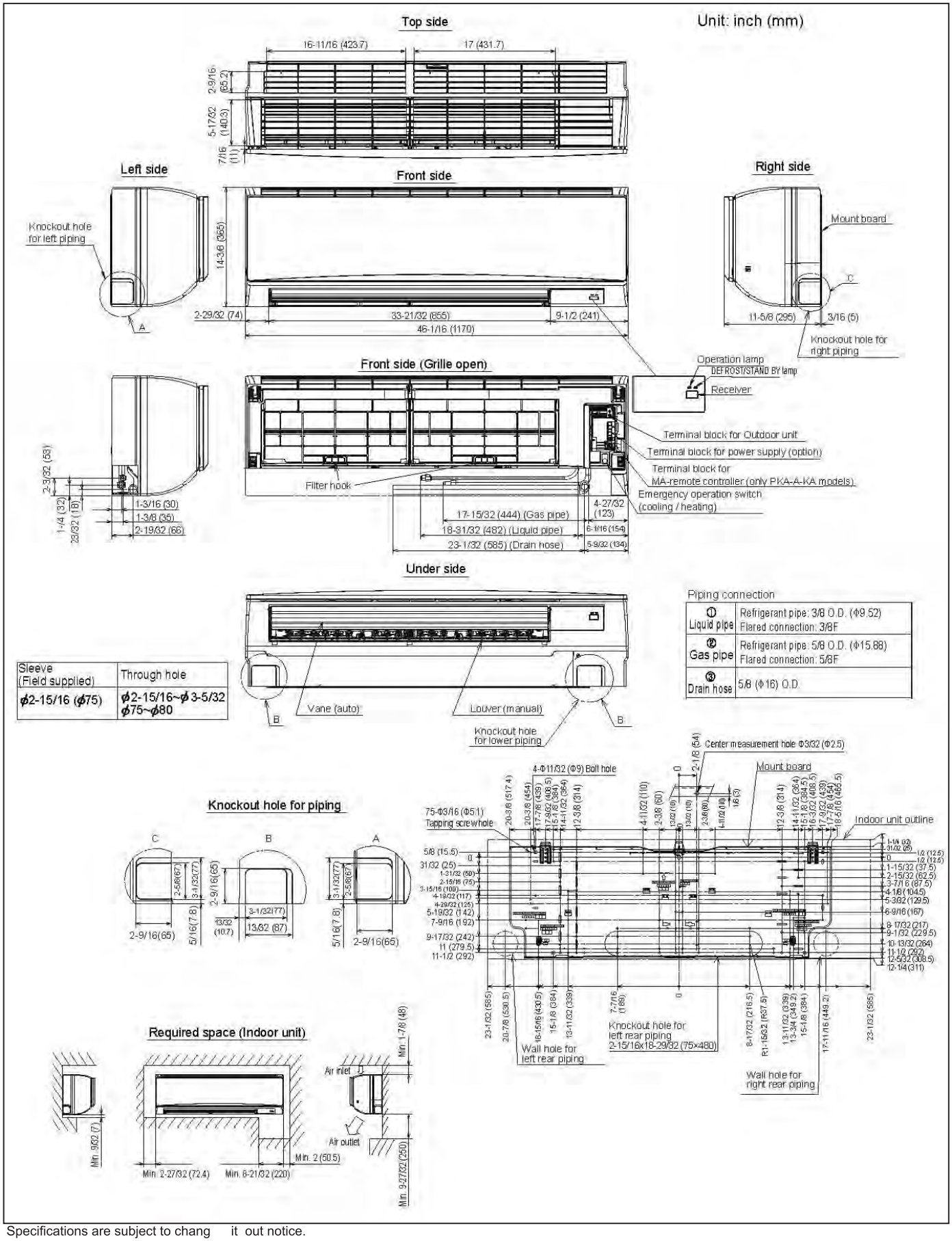

Specifications are subject to chang it out notice.

© 2014 Mitsubishi Electric US, Inc.

DIMENSIONS: PUZ-HA36NHA4

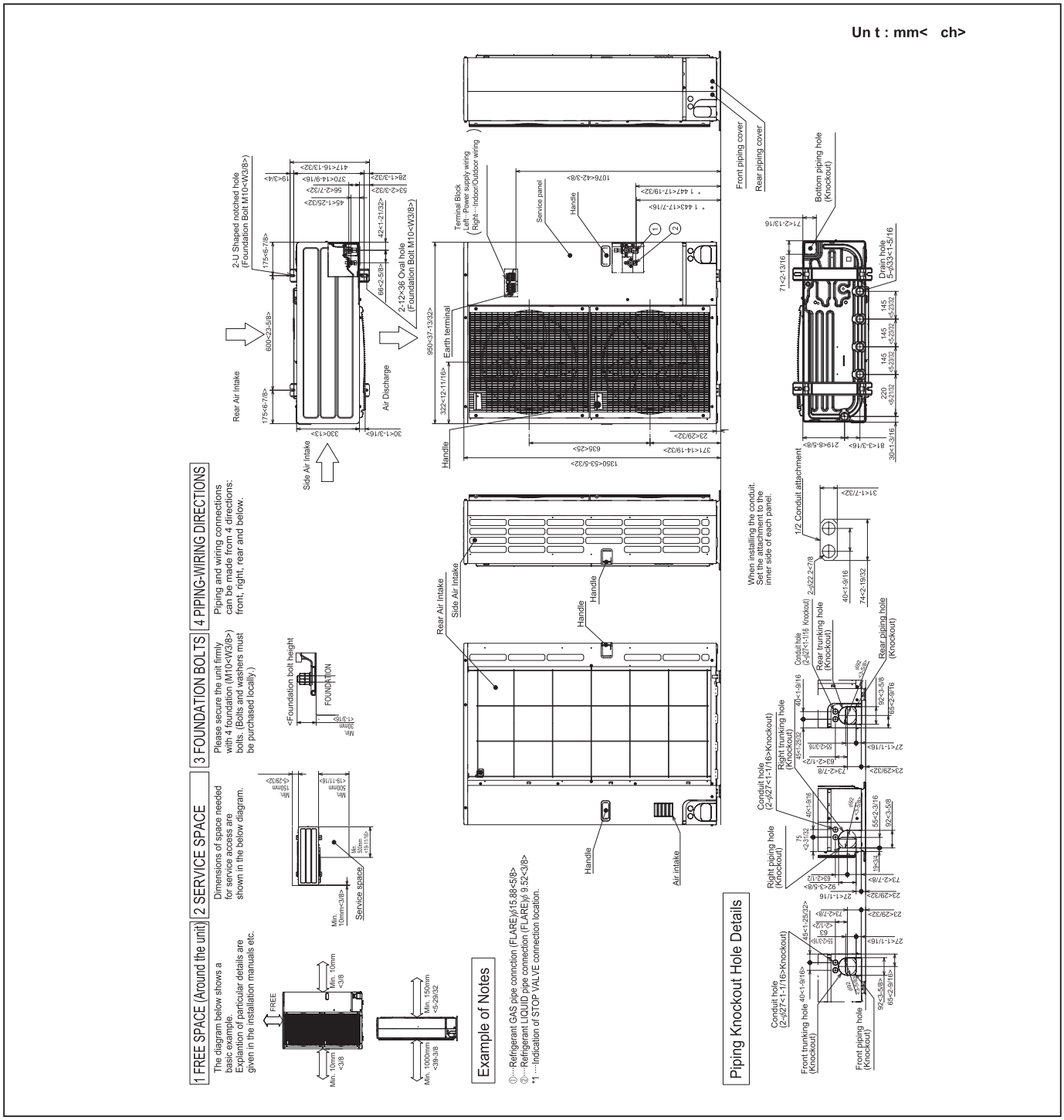

1340 Satellite Boulevard
Suwanee, GA 30024
Toll Free: 800-433-4822
www.mehvac.com

FORM# PKA-A30KA4 / PUZ-HA36NHA4 - 201409

Specifications are subject to change without notice.
© 2014 Mitsubishi Electric US, Inc.

HEAT EXCHANGER

BY

MANUFACTURER

POLARIS

POLARIS P.H.E. Design Calculation

V1041A

MODEL S31A-IG10-120-TMTL17		Hot Side	Cold Side
Flow Rate	(g.p.m.)	109.00	210.00
Inlet Temperature	(°F)	160.00	120.00
Outlet Temperature	(°F)	120.28	140.00
Pressure Drop	(PSI)	1.30	4.50
Heat Exchanged	(Btu/h)	2070344	
Fluid Properties		**30 % PropGlycol**	**Water**
Density	(Lb/Ft³)	62.71	61.53
Specific Heat	(Btu/Lb*F)	0.95	1.00
Thermal Conductivity	(Btu/h*Ft*F)	0.28	0.37
Mean Viscosity	(cP)	1.08	0.53
Wall Viscosity	(cP)	1.11	0.48
Inlet Locations		F1	F3
Outlet Locations		F4	F2

Materials / Dimensions		
Plate Arrangement (Passes*Channels)		1 × 59 + 0 × 0
Plate Arrangement (Passes*Channels)		1 × 60 + 0 × 0
Number of Plates		120
Heat Transfer Area	(Ft²)	413.26
Overall K-value Duty/Clean	(Btu/Ft²*h*F)	576 / 576
Plate Material		0.0157 inch AISI 304
Gasket Material / Max. Temp.		NBR CLIP-TITE
Max. Design Temperature	(°F)	284
Max. Working/Test Pressure	(PSI)	150.0 / 195.0
Frame Type		IG Length Code: 4
Connections HOT Side		2.5 INCH Flange Mild steel ANSI B16.5 #150
Connections COLD Side		2.5 INCH Flange Mild steel ANSI B16.5 #150
Total Hold-Up Volume	(Ft³)	4.83
Frame Length	(Ft)	2.59 Max. No. of Plates 134
Empty Weight	(Lb)	956

DATE	6/26/2018
CUSTOMER	DOLPHIN EQUIPMENT
ADDRESS	ORADELL, NJ
CUSTOMER REFERENCE	PS 320X
QUOTE#	S-8518 R1
ITEM#	HX-1

Polaris P.H.E. LLC **1151 Broad St. Suite 218** **Shrewsbury, NJ 07702**
Phone: +1 732 544 8800 **Fax: +1 732 935 8407** **sales@polarisphe.com**

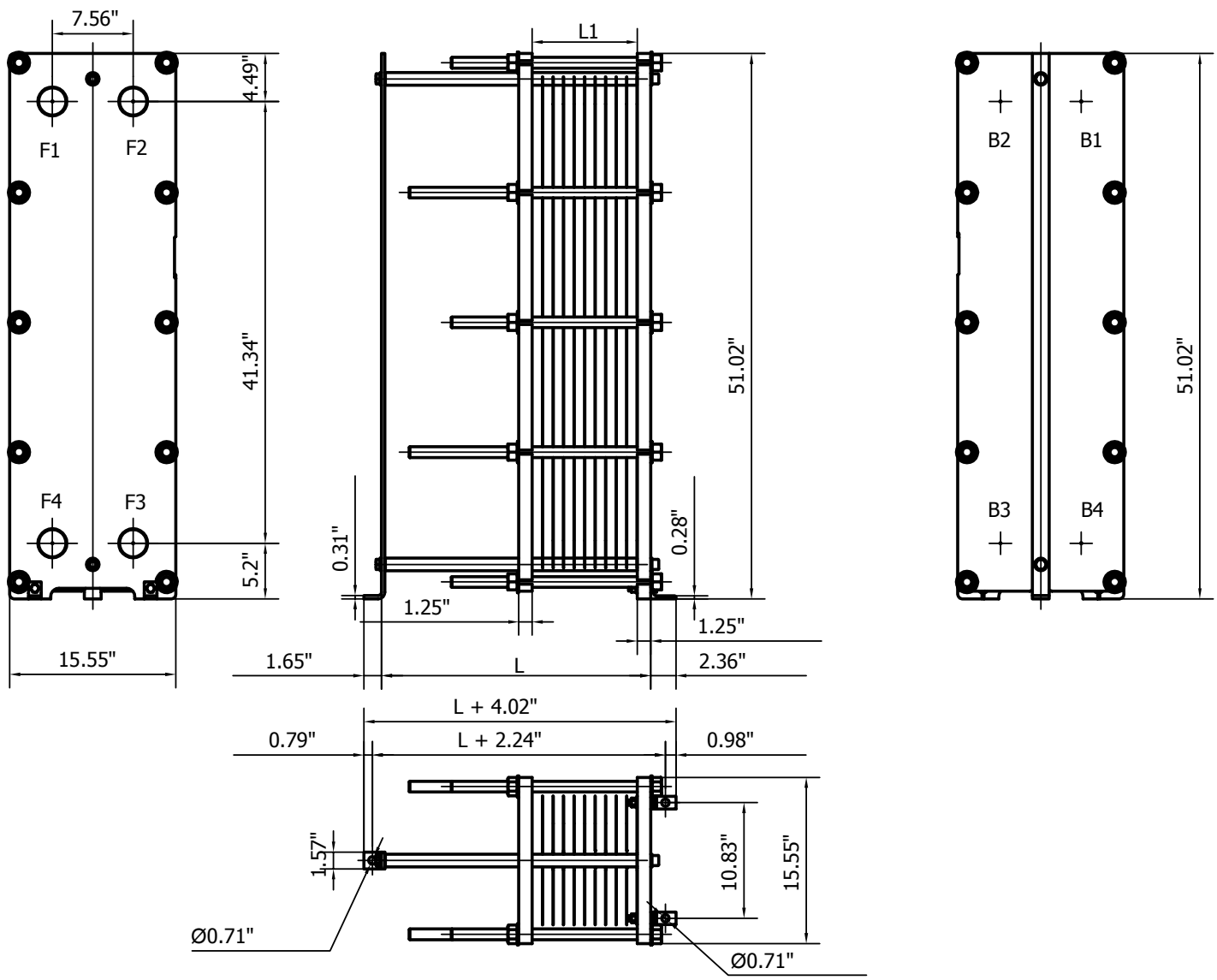

CONNECTION PROPERTIES

LOCATION	DESIGNATION	SIZE	TYPE	MATERIAL
F1	SIDE 1 INLET	2.5"	ANSI-150#	C.S.
F2	SIDE 2 OUTLET	2.5"	ANSI-150#	C.S.
F3	SIDE 2 INLET	2.5"	ANSI-150#	C.S.
F4	SIDE 1 OUTLET	2.5"	ANSI-150#	C.S.
B1	NOT USED			
B2	NOT USED			
B3	NOT USED			
B4	NOT USED			

NOTES

OSHA-COMPLIANT SAFETY SHROUD
ASME SEC. VIII DIV. 1 STAMP

Polaris
PLATE HEAT EXCHANGERS

106 APPLE ST. STE 106
TINTON FALLS, NJ 07724
732-345-7188
732-345-7166 - FAX

POLARIS MODEL S31A-IG10		POLARIS REF.#
CUSTOMER		
JOB NAME		CUST. REF.#
DATE 10/18/2016	DWG NO. 1631A-A44	REV 1.0

GLYCOL MAKE-UP SYSTEM

BY

MANUFACTURER

WESSELS COMPANY

SINCE 1908
wessels company

SUBMITTAL

GMPT-SERIES

TWIN GLYCOL MAKE-UP PACKAGE

Models: GMPT-33050 thru GMPT-35100
Submittal Sheet No. I-1104B Date: 4/16

Job Name	_____	Submitted By	_____	Date _____
Location	_____	Approved By	_____	Date _____
	_____	Order No.	_____	Date _____
Engineer	_____	Notes	_____	
Contractor	_____		_____	
Sales Rep.	_____		_____	

Description

The twin GMPT unit is designed to automatically supply a pressurized solution, such as glycol and water, to a combined two unit closed loop heating, chilled water, snowmelt, radiant heating, sprinkler, or process control system to ensure minimum system pressure requirements are met. These systems are equipped with two alternating fail-safe motors, pumps, and HOA controls that allow one pump to operate if the other pump malfunctions. These units are also equipped with an adjustable pressure reducing valve (PRV), pressure gauge, and low level alarm that cuts power to the pumps and actuates an audible and visual alarm when solution levels are too low.

Performance Limitations

Maximum Temperature: 160°F
Factory Discharge Pressure Setting: 12 PSIG
Maximum Discharge Pressure: 70 PSIG*

*Higher Discharge pressures available.

Available Options

- High level alarm
- Protective skirt

Model Number	Part Number	Tank Volume (Gallons)	Tagging Information	Quantity
GMPT-33050	07103170	50		
GMPT-33100	07103175	100		
GMPT-35050	07103180	50		
GMPT-35100	07103185	100		

Typical Specification

Furnish and install, as indicated on the plans and specifications, a prefabricated, automatic and autonomous twin make-up package capable of producing _____GPM at _____psig to a paired glycol system or to a system where fail-safe redundancy is required. The package shall consist of two paired, 110V, 60Hz powered, autonomous pumping assemblies, a sturdy steel frame, and a graduated polyethylene solution container with removable lid designed to work together to maintain a specific fill pressure in the glycol system(s). The make-up package must feature HOA controls for each magnetic starter, a protective low water cut-off alarm, two alternating _____HP (1/3 or 1/2) motors with brass rotary vane pumps and a fail-safe alternator that allows one pump to operate if the other pump malfunctions, a pressure tank with pressure controls, pressure reducing valves, pressure gauges, and a system isolation valve. A 110V signal shall be available for a remote alarm.

Each glycol make-up package shall be model GMPT - _____ as manufactured by Wessels Company or approved equal.

101 TANK ST ● GREENWOOD, IN 46143 ● (317) 888-9800 ● (317) 888-9988 FAX ● www.westank.com

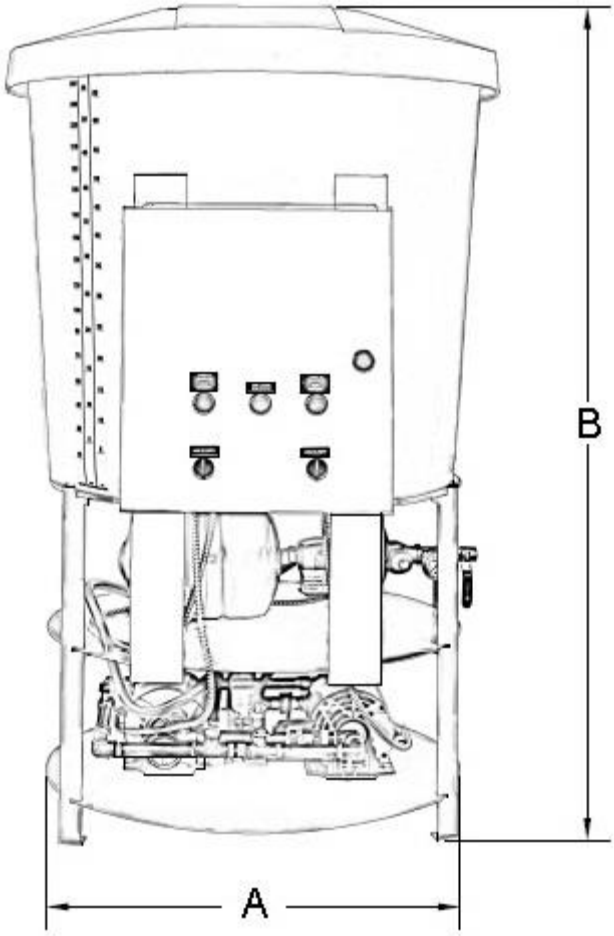

GMPT-33050 thru GMPT-35100

Dimensions & Weights

Model Number	Dimensions In Inches		HP	Pressure Range (psi)	Make-Up Capacity (gpm @ psi)	Approx Shipping Weight (lbs)
	A	B				
GMPT-33050	28	55	1/3	10-70	1.8 @ 70	153
GMPT-33100		78				166
GMPT-35050		55	1/2			153
GMPT-35100		78				166

AIR ELIMINATOR AND DIRT SEPARATOR

BY

MANUFACTURER

SPIROTHERM

SPIROTHERM®

Submittal Data

VDT 2-12

Spirovent® Dirt
Air Eliminator and Dirt Separator

Job Name:
Engineer:
Contractor:
Representative:

Tag	Model	Flow	Size	Location

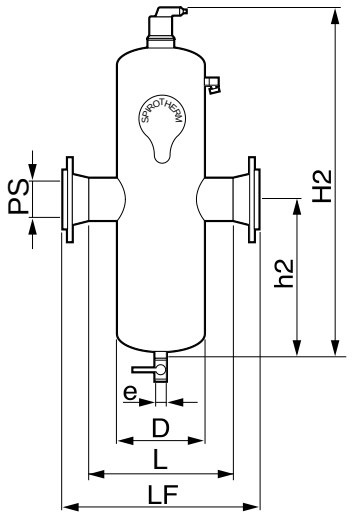

Specifications:

Shell	Steel
Vent Head	Brass
Float	Non-Ferrous
Seal	Viton
O Ring	Viton
Skim Valve	Brass
Coalescing Medium	Copper
Ball Valve	Brass
Max. Working Pressure	150 psig
Max. Operating Temperature	270°F

Notes:

PS – Pipe Size	2”	2 ½”	3”	4”	5”	6”	8”	10”	12”
D (inches)	6.3	6.3	8.6	8.6	12.8	12.8	16.0	20.0	24.0
H2 (inches)	25.3	25.3	31.4	31.4	41.7	41.7	51.8	67.5	79.7
h2 (inches)	10.4	10.4	13.6	13.6	18.9	18.9	24.2	32.1	38.2
L (inches)	10.2	10.2	14.6	14.6	---	---	---	---	---
LF (inches)	15.2	15.7	20.2	20.6	27.7	27.7	33.6	37.5	42.5
e (inches)	1	1	1	1	1	1	1	1	1
Weight NPT (lbs)	55	56	105	120	---	---	---	---	---
Weight Flg (lbs)	66	75	139	149	238	260	436	718	1250
Rec. Flow (gpm)	60	90	140	240	370	540	940	1470	2090
Model* VDT-	200	250	300	400	500	600	800	1000	1200

(Dimensions for reference only)

*VDT xxx MT: Threaded NPT
*VDT xxx FA: Flanged ASME Section VIII, Division 1 Stamped and Registered

© 2014 Spirotherm, Inc., 25 North Brandon Drive, Glendale Heights, IL 60139

EXPANSION TANKS

BY

MANUFACTURER

EXTROL

Tank Sizing Worksheet for Diaphragm Expansion Tanks

Date:	3/1/2018
Job:	PS320X
System:	CHILLED GLYCOL
Engineer	LILKER

Total System Volume	30% PG	1000	Gallons	
Average System Temperature	45-55	50	º	
Minimum Pressure at Tank Location		30	PSI	assumption
Maximum Pressure at Tank Location		50	PSI	assumption
Expansion Factor		1	%	
Acceptance Factor		31	%	
Minimum Tank Volume		32.4	Gallons	
Expansion Volume		10.0	Gallons	

The Selected Tank is	AX-60V	
This Model Has a Total Tank Volume of	33.6	Gallons
The Acceptance Volume is	11.3	Gallons

The Maximum Operating Pressure at the Tank	49	PSI
Dimensions	16" x 45"	Dia. x L
Weight	98	lbs.
Working pressure (max)	125	psi
Manufacturer	AMTROL	

This worksheet was prepared by Dolphin Equipment. If you need additional information, please contact us at 914-663-8355

Size	Length	gal./ft	Gallons	
3.4"		0.027	0	
1"		0.045	0	
1.25"		0.078	0	
1.5"		0.1	0	
2"		0.175	0	
2.5"		0.25	0	
3"		0.38	0	
4"		0.66	0	
5"		1	0	
6"		1.5	0	
8"		2.66	0	
10"		4.19	0	
14"		8	0	
	Total Volume		0	gallons
	Coils			
	Total Volume		0	

Tank Sizing Worksheet for Diaphragm Expansion Tanks

Date:	3/1/2018
Job:	PS320X
System:	PRIMARY HOT GLYCOL SYSTEM
Engineer	LILKER

Total System Volume	30% PG	1000	Gallons	
Average System Temperature	155-125	135	º	
Minimum Pressure at Tank Location		30	PSI	assumption
Maximum Pressure at Tank Location		50	PSI	assumption
Expansion Factor		2.4	%	
Acceptance Factor		31	%	
Minimum Tank Volume		77.6	Gallons	
Expansion Volume		24.0	Gallons	

The Selected Tank is	AX-144V	
This Model Has a Total Tank Volume of	77	Gallons
The Acceptance Volume is	34	Gallons

The Maximum Operating Pressure at the Tank	50	PSI
Dimensions	24" x 52"	Dia. x L
Weight	230	lbs.
Working pressure (max)	125	psi
Manufacturer	AMTROL	

This worksheet was prepared by Dolphin Equipment. If you need additional information, please contact us at 914-663-8355

Size	Length	gal./ft	Gallons	
3.4"		0.027	0	
1"		0.045	0	
1.25"		0.078	0	
1.5"		0.1	0	
2"		0.175	0	
2.5"		0.25	0	
3"		0.38	0	
4"		0.66	0	
5"		1	0	
6"		1.5	0	
8"		2.66	0	
10"		4.19	0	
14"		8	0	
	Total Volume		0	gallons
	Coils			
	Total Volume		0	

Tank Sizing Worksheet for Diaphragm Expansion Tanks

Date:	3/1/2018
Job:	PS320X
System:	CHILLED GLYCOL
Engineer	LILKER

Total System Volume	30% PG	1000	Gallons	
Average System Temperature	45-55	50	º	
Minimum Pressure at Tank Location		30	PSI	assumption
Maximum Pressure at Tank Location		50	PSI	assumption
Expansion Factor		1	%	
Acceptance Factor		31	%	
Minimum Tank Volume		32.4	Gallons	
Expansion Volume		10.0	Gallons	

The Selected Tank is	AX-60V	
This Model Has a Total Tank Volume of	33.6	Gallons
The Acceptance Volume is	11.3	Gallons

The Maximum Operating Pressure at the Tank	49	PSI
Dimensions	16" x 45"	Dia. x L
Weight	98	lbs.
Working pressure (max)	125	psi
Manufacturer	AMTROL	

This worksheet was prepared by Dolphin Equipment. If you need additional information, please contact us at 914-663-8355

Size	Length	gal./ft	Gallons	
3.4"		0.027	0	
1"		0.045	0	
1.25"		0.078	0	
1.5"		0.1	0	
2"		0.175	0	
2.5"		0.25	0	
3"		0.38	0	
4"		0.66	0	
5"		1	0	
6"		1.5	0	
8"		2.66	0	
10"		4.19	0	
14"		8	0	
	Total Volume		0	gallons
	Coils			
	Total Volume		0	

Tank Sizing Worksheet for Diaphragm Expansion Tanks

Date:	3/1/2018
Job:	PS320X
System:	PRIMARY HOT GLYCOL SYSTEM
Engineer	LILKER

Total System Volume	30% PG	1000	Gallons	
Average System Temperature	155-125	135	º	
Minimum Pressure at Tank Location		30	PSI	assumption
Maximum Pressure at Tank Location		50	PSI	assumption
Expansion Factor		2.4	%	
Acceptance Factor		31	%	
Minimum Tank Volume		77.6	Gallons	
Expansion Volume		24.0	Gallons	

The Selected Tank is	AX-144V	
This Model Has a Total Tank Volume of	77	Gallons
The Acceptance Volume is	34	Gallons

The Maximum Operating Pressure at the Tank	50	PSI
Dimensions	24" x 52"	Dia. x L
Weight	230	lbs.
Working pressure (max)	125	psi
Manufacturer	AMTROL	

This worksheet was prepared by Dolphin Equipment. If you need additional information, please contact us at 914-663-8355

Size	Length	gal./ft	Gallons	
3.4"		0.027	0	
1"		0.045	0	
1.25"		0.078	0	
1.5"		0.1	0	
2"		0.175	0	
2.5"		0.25	0	
3"		0.38	0	
4"		0.66	0	
5"		1	0	
6"		1.5	0	
8"		2.66	0	
10"		4.19	0	
14"		8	0	
	Total Volume		0	gallons
	Coils			
	Total Volume		0	

Tank Sizing Worksheet for Diaphragm Expansion Tanks

Date:	3/1/2018
Job:	PS320X
System:	SECONDARY HOT WATER SYSTEM
Engineer	LILKER

Total System Volume	WATER	1000	Gallons	
Average System Temperature	120-140	130	º	
Minimum Pressure at Tank Location		30	PSI	assumption
Maximum Pressure at Tank Location		50	PSI	assumption
Expansion Factor		1.23	%	
Acceptance Factor		31	%	
Minimum Tank Volume		39.8	Gallons	
Expansion Volume		12.3	Gallons	

The Selected Tank is	AX-80V	
This Model Has a Total Tank Volume of	44.4	Gallons
The Acceptance Volume is	22.6	Gallons

The Maximum Operating Pressure at the Tank	47	PSI
Dimensions	24" x 29"	Dia. x L
Weight	155	lbs.
Working pressure (max)	125	psi
Manufacturer	AMTROL	

This worksheet was prepared by Dolphin Equipment. If you need additional information, please contact us at 914-663-8355

Size	Length	gal./ft	Gallons	
3.4"		0.027	0	
1"		0.045	0	
1.25"		0.078	0	
1.5"		0.1	0	
2"		0.175	0	
2.5"		0.25	0	
3"		0.38	0	
4"		0.66	0	
5"		1	0	
6"		1.5	0	
8"		2.66	0	
10"		4.19	0	
14"		8	0	
	Total Volume		0	gallons
	Coils			
	Total Volume		0	

Tank Sizing Worksheet for Diaphragm Expansion Tanks

Date:	3/1/2018
Job:	PS320X
System:	SECONDARY HOT WATER SYSTEM
Engineer	LILKER

Total System Volume	WATER	1000	Gallons	
Average System Temperature	120-140	130	º	
Minimum Pressure at Tank Location		30	PSI	assumption
Maximum Pressure at Tank Location		50	PSI	assumption
Expansion Factor		1.23	%	
Acceptance Factor		31	%	
Minimum Tank Volume		39.8	Gallons	
Expansion Volume		12.3	Gallons	

The Selected Tank is	AX-80V	
This Model Has a Total Tank Volume of	44.4	Gallons
The Acceptance Volume is	22.6	Gallons

The Maximum Operating Pressure at the Tank	47	PSI
Dimensions	24" x 29"	Dia. x L
Weight	155	lbs.
Working pressure (max)	125	psi
Manufacturer	AMTROL	

This worksheet was prepared by Dolphin Equipment. If you need additional information, please contact us at 914-663-8355

Size	Length	gal./ft	Gallons	
3.4"		0.027	0	
1"		0.045	0	
1.25"		0.078	0	
1.5"		0.1	0	
2"		0.175	0	
2.5"		0.25	0	
3"		0.38	0	
4"		0.66	0	
5"		1	0	
6"		1.5	0	
8"		2.66	0	
10"		4.19	0	
14"		8	0	
	Total Volume		0	gallons
	Coils			
	Total Volume		0	

AMTROL

Amtrol hydronic expansion tanks are fo
chilled water systems. Available in di
bladder designs, all Extrol expansion
registered facilities. ASME tanks m

EXTROL AX Series

- Diaphragm design; industry's thickest.
- Horizontal and vertical models are available with optional restraints.
- Factory pre-charge: 12 psig.
- Maximum operating temperature: 240° F.

Supporting Documentations:

SELECT MECHANICAL DRAWINGS

M001 - HVAC SYMBOLS, NOTES, AND PARAMETERS
M003 - HVAC SCHEDULE SHEET #1
M004 - HVAC SCHEDULE SHEET #2
M005 - HVAC SCHEDULE SHEET #3
M404 - HVAC LONWORKS SYSTEM CONTROL ARCHITECTURE DIAGRAM
M405 - HVAC LONWORKS SYSTEM CONTROL PANEL
M406 - HVAC AUTOMATIC TEMPERATURE CONTROL SHEET #1
M407 - HVAC AUTOMATIC TEMPERATURE CONTROL SHEET #2
M408 - HVAC AUTOMATIC TEMPERATURE CONTROL SHEET #3
M409 - HVAC AUTOMATIC TEMPERATURE CONTROL SHEET #4
M410 - HVAC AUTOMATIC TEMPERATURE CONTROL SHEET #5
M411 - HVAC AUTOMATIC TEMPERATURE CONTROL SHEET #6
M412 - HVAC AUTOMATIC TEMPERATURE CONTROL SHEET #7
M413 - HVAC AUTOMATIC TEMPERATURE CONTROL SHEET #8
M414 - HVAC AUTOMATIC TEMPERATURE CONTROL SHEET #9
M415 - HVAC AUTOMATIC TEMPERATURE CONTROL SHEET #10
M416 - HVAC AUTOMATIC TEMPERATURE CONTROL SHEET #11

This page intentionally left blank.

GENERAL MECHANICAL NOTES

1. ENTIRE INSTALLATION SHALL COMPLY WITH ALL LOCAL AND STATE CODES, INCLUDING ENERGY CODES, AND ALL OTHER AUTHORITIES HAVING JURISDICTION.
2. PROPER FIRE PROTECTION MEASURES, SATISFACTORY TO THE LOCAL FIRE DEPARTMENT, SHALL BE TAKEN WHEN WELDING OR CUTTING WITH TORCHES OR ELECTRIC ARC.
3. CONTRACTOR SHALL SECURE AND PAY FOR ALL REQUIRED PERMITS AND APPROVALS. ALL REQUIRED SPECIAL AND CONTROLLED INSPECTIONS SHALL BE BY THIS CONTRACTOR.
4. IT SHALL BE THE CONTRACTORS SOLE RESPONSIBILITY TO PROVIDE ALL REQUIRED DOCUMENTS, PAY ALL FEES AND TO SEPARATELY FILE AND OBTAIN ALL APPROVALS AND PERMITS REQUIRED FOR ALL WORK INVOLVED IN TEMPORARY HEATING SYSTEM(S) TO BE USED AT THE SITE. ALL WORK SHALL BE PROVIDED AND INSTALLED PER THE REQUIREMENTS OF THE NYC BUILDING CODE.
5. PROVIDE SEISMIC BRACING AND ANCHORING OF MECHANICAL EQUIPMENT, PIPING, AND DUCTWORK IN ACCORDANCE WITH THE GOVERNING CODES. THE STRUCTURAL DESIGN AND APPLICATION OF SEISMIC RESTRAINTS SHALL MEET THE CODE CRITERIA LISTED "DESIGN CRITERIA". THE CONTRACTORS SHALL RETAIN AN INDEPENDENT PROFESSIONAL ENGINEER TO DESIGN SEISMIC RESTRAINTS, PREPARE INSTALLATION DETAILS, SUPERVISE INSTALLATION, AND CERTIFY THAT THE INSTALLATION MEETS THE CODE CRITERIA LISTED HEREIN, SIGNED AND SEALED INSTALLATION DETAILS AND CALCULATIONS SHALL BE SUBMITTED AS SHOP DRAWINGS.
6. ALL SUPPORT SYSTEMS (SUPPORTS, HANGERS, ANCHORS, GUIDES, BRACING, FASTENERS, WELDS, ETC.) FOR EQUIPMENT AND SYSTEMS INSTALLED OR REVISED AS PART OF THIS CONTRACT SHALL BE DESIGNED, SELECTED AND INSTALLED BY THE CONTRACTOR TO RESIST ALL SEISMIC, WIND AND GRAVITY LOADS. UNDER CERTAIN CONDITIONS, THE APPLICABLE CODES REQUIRE THESE LOADS, OR A COMBINATION OF THESE LOADS, BE CONSIDERED AS "CONSIDENTIAL". THE CONTRACTOR SHALL ALSO BE RESPONSIBLE FOR CONFIRMING THAT THE COMPONENT OF THE BUILDING STRUCTURE WHERE THESE SUPPORT SYSTEMS ARE ATTACHED IS ABLE TO RESIST THE DESIGN LOADS TRANSFERRED TO THIS BUILDING COMPONENT.
7. ALL PENETRATIONS OF FLOORS (WHETHER OR NOT FIRE RESISTANCE RATED) AND ALL PENETRATIONS OF FIRE RATED WALLS AND FLOORS SHALL BE PROVIDED WITH A THROUGH-PENETRATION PROTECTION SYSTEM (FIRESTOPPING). EACH THROUGH-PENETRATION PROTECTION SYSTEM SHALL BE TESTED IN ACCORDANCE WITH ASTM E814 AND BE LISTED FOR THE TYPE OF FLOOR OR WALL ASSEMBLY PENETRATED AND THE TYPE OF PROTECTION SYSTEM.
8. ALL AIR MOVING DEVICES, INCLUDING BUT NOT LIMITED TO AIR HANDLING UNITS, AIR CONDITIONING UNITS, AND UNIT VENTILATORS, MUST COMPLY WITH AMCA STANDARD 210 AND ASHRAE STANDARD 62.1-2007.
9. DRAWINGS ARE INTENDED TO SHOW THE PROPER SIZE AND GENERAL LOCATIONS OF THE EQUIPMENT, PIPING, DUCTWORK, ETC. DRAWINGS ARE DIAGRAMMATIC AND INDICATE GENERAL ARRANGEMENT OF SYSTEMS AND WORK INCLUDED IN CONTRACT. DEVIATIONS FROM LAYOUT SHOWN MUST BE APPROVED BY THE ARCHITECT.
10. SHOP DRAWINGS SHALL BE PREPARED WITH COMPLETE DIMENSIONAL INFORMATION, INCLUDING COORDINATES TO BRANCH DUCT AND DIFFUSERS STUBS. ELEVATIONS TO THE UNDERSIDE OF DUCTS, SHALL BE CLEARLY INDICATED ON THE DRAWING SUBMITTED AND SHALL BE CAREFULLY CHECKED FOR CONFORMANCE WITH CEILING HEIGHT REQUIREMENTS. ALL CONFLICTS MUST BE FLAGGED ON THE SHOP DRAWINGS.
11. THE SHEET METAL SHOP DRAWINGS SHALL INDICATE ALL HUNG CEILING STARTING POINTS, ELEVATIONS AND BREAK LINES, WHERE PIPING, LIGHTS AND DUCTWORK CONFLICTS; DUCTWORK SHALL BE SET UP ROOM.
12. SEE ARCHITECTURAL DRAWINGS AND SPECIFICATIONS FOR CONSTRUCTION PHASING REQUIREMENTS.
13. CONTRACTOR SHALL COORDINATE HIS WORK WITH THE WORK OF ALL OTHER TRADES.
14. CONTRACTOR SHALL COORDINATE WITH ALL ARCHITECTURAL DRAWINGS.
15. CONTRACTOR IS RESPONSIBLE TO COORDINATE AND INCLUDE IN HIS BID THE RELOCATION OF ALL PIPING, DUCTWORK, HANGERS, CONDUITS, ETC. REQUIRED TO INSTALL NEW EQUIPMENT, PIPING, DUCTWORK, ETC.
16. CONTRACTOR SHALL BE RESPONSIBLE FOR ALL CUTTING AND PATCHING OF WALLS, CEILINGS, ROOFS AND FLOORS REQUIRED AS A RESULT OF HIS WORK.
17. DUCTWORK AND PIPING LAYOUTS ARE SCHEMATIC DIAGRAMS AND ARE INTENDED TO SHOW GENERAL ARRANGEMENT, SIZE AND CAPACITY AND DO NOT NECESSARILY INDICATE WHICH PIPE OR DUCT IS ABOVE OR BELOW THE OTHER. ALL OFFSETS ARE NOT NECESSARILY SHOWN. CONTRACTOR SHALL ARRANGE AND COORDINATE THE WORK, FURNISH NECESSARY OFFSETS, VALVES, VENTS AND FITTINGS TO AVOID CONFLICT WITH OTHER MECHANICAL AND ELECTRICAL SERVICES AND STRUCTURAL AND ARCHITECTURAL ELEMENTS WITHOUT ADDITIONAL COST TO THE OWNER. IF AREAS OF CONFLICT ARE ENCOUNTERED, THE ARCHITECT SHALL BE NOTIFIED AND CONTRACTOR'S RECOMMENDATIONS SHALL BE SUBMITTED TO THE ARCHITECT FOR APPROVAL BEFORE WORK HAS BEGUN.
18. CONTRACTOR SHALL PROVIDE ALL NECESSARY MISCELLANEOUS STEEL FOR THE SUPPORT OF ALL EQUIPMENT, PIPING, CONDUIT AND DUCTWORK. SUSPENDED FROM SLAB, STEEL, WALL, OR TRUSSWORK.
19. UNLESS OTHERWISE NOTED ON THE DRAWINGS, ALL MECHANICAL EQUIPMENT SHALL BE MOUNTED ON VIBRATION ISOLATORS TO PREVENT THE TRANSMISSION OF SOUND TO THE BUILDING STRUCTURE. VIBRATION ISOLATORS SHALL BE IN ACCORDANCE WITH THE SPECIFICATIONS AND SHALL BE BASED ON ACTUAL WEIGHT DISTRIBUTION OF THE EQUIPMENT FURNISHED. DEFLECTIONS SHALL BE AS NOTED ON THE EQUIPMENT SHOP DRAWING SUBMITTALS.
20. CONTRACTOR SHALL ENSURE THAT ALL MECHANICAL DEVICES ARE INSTALLED IN A LOCATION WHICH AFFORDS ACCESSIBILITY FOR MAINTENANCE AND REPAIR. COORDINATE INSTALLATION AMONG ALL TRADES TO AVOID INTERFERENCES AND LOCATE EQUIPMENT TO PROVIDE CLEARANCES WHICH EXCEED THOSE RECOMMENDED BY THE EQUIPMENT MANUFACTURER. PRIOR TO PROJECT COMPLETION, REPRESENTATIVES OF THE OWNER WILL REVIEW EACH INSTALLATION AND WILL DIRECT CHANGES WHENEVER ACCESS OR SERVICEABILITY IS, IN THEIR OPINION, UNACCEPTABLE.
21. ALL MECHANICAL CONTROLS (THERMOSTATS, SENSORS, ETC.) SHALL BE INSTALLED AT A HEIGHT OF 5'-0" ABOVE FLOOR. COORDINATE EXACT LOCATION AND MOUNTING HEIGHT WITH ARCHITECT PRIOR TO INSTALLATION.
22. OWNER PROVIDED EQUIPMENT SHALL BE RECEIVED AND INSTALLED BY THE MECHANICAL CONTRACTOR. ALL COST ASSOCIATED WITH RECEIVING, RECEIVING AND STORAGE SHALL BE THE RESPONSIBILITY OF THE CONTRACTOR.
23. ALL ACCESS DOORS IN FINISHED WALLS AND CEILINGS SHALL BE SUPPLIED BY THIS CONTRACTOR AND SHALL BE FRAMELESS TYPE SUITABLE FOR THE CONSTRUCTION TYPE INDICATED ON THE ARCHITECTURAL DRAWINGS. COORDINATE ALL LOCATIONS OF ACCESS DOORS WITH ARCHITECTURAL DRAWINGS. LOCATE VALVES SO AS TO BE WITHIN ONE (1) FOOT OF AN ACCESS DOOR.
24. EXACT LOCATION OF DIFFUSERS, GRILLES AND REGISTERS TO BE COORDINATED WITH ARCHITECTURAL PLANS.
25. CONTRACTOR SHALL BE RESPONSIBLE FOR BALANCING OF AIR QUANTITIES AT ALL AIR CONDITIONING OUTLETS AND INLETS.
26. HVAC CONTRACTOR SHALL CHANGE FILTERS IN ALL AIR HANDLING UNITS PRIOR TO DELIVERY OF SYSTEM TO OWNER.
27. DUCT MOUNTED SMOKE DETECTORS SHALL BE PROVIDED IN THE SUPPLY AND RETURN DUCTS OF ALL AIR HANDLING UNITS WITH A CAPACITY GREATER THAN 2,000 CFM. WHERE A RETURN AIR PLENUM IS SHARED BETWEEN MULTIPLE AIR HANDLING UNITS TOTALING GREATER THAN 2,000 CFM, A DUCT SMOKE DETECTOR SHALL BE PROVIDED IN THE RETURN DUCT OF EACH AIR HANDLING UNIT.
28. ALL ROTATING HVAC EQUIPMENT SHALL BE SUPPORTED OR SUSPENDED ON VIBRATION ISOLATORS. PROVIDE FLEXIBLE CONNECTORS AT ALL DUCT AND PIPE CONNECTIONS TO ROTATING EQUIPMENT.
29. DUCT SIZES SHOWN ARE CLEAR INSIDE DIMENSIONS.
30. PROVIDE DOUBLE THICKNESS TURNING VANES IN ALL SQUARE ELBOWS.
31. PROVIDE VOLUME DAMPER ON EACH BRANCH TAKE OFF FROM DUCT MAIN, AND ON EACH DIFFUSER TAKE OFF FROM BRANCH DUCT DRAWN.
32. PROVIDE AND INSTALL COMBINATION FIRE AND SMOKE DAMPERS AND ACCESS DOORS IN ALL DUCTWORK PENETRATING FIRE RATED WALLS (2 HOURS OR MORE). FIRE DAMPERS AND ACCESS DOORS SHALL BE PROVIDED AND INSTALLED IN ALL DUCTWORK PENETRATING FIRE RATED WALLS 1-1/2 HOUR OR LESS. ALL ACCESS DOORS SHALL BE A MINIMUM OF 12"X 12" UNLESS OTHERWISE NOTED.
33. WHERE PIPING CONNECTIONS FOR THE EQUIPMENT SUCH AS PUMPS, ACUNITS, COILS ETC. DIFFER FROM THE LINE SIZE, IT SHALL BE THE RESPONSIBILITY OF THE MECHANICAL CONTRACTOR TO FURNISH AND INSTALL THE NECESSARY REDUCERS OR EXPANDER FITTING TO ENABLE CONNECTION BETWEEN THE PIPING SYSTEM AND THE EQUIPMENT.
34. PROVIDE CAPPED MANUAL AIR VENTS AT ALL HYDRONIC SYSTEM HIGH POINTS, AND BEFORE ALL VERTICAL DROPS IN DIRECTION OF FLOW. PROVIDE CAPPED HOSE DRAINS AT ALL SYSTEM LOW POINTS, SO AS TO ENABLE THE COMPLETE DOWN DRAIN OF THE SYSTEM.
35. ALL CONDENSATE DRAIN LINES SHALL COMPLY WITH N.S.P.C. 9.8.2 (AIR CONDITIONING CONDENSATE POINT OF DISCHARGE). NO PLASTIC PIPING SHALL BE INSTALLED IN PLENUM CEILING.
36. MINIMUM SIZE OF ALL CONDENSATE DRAIN PIPING SHALL BE 3/4" UNLESS OTHERWISE NOTED. ALL DRAIN PIPING SHALL BE PITCHED IN THE DIRECTION OF FLOW, MIN. 1" IN 40 FT.
37. PROVIDE SHUT-OFF VALVES AT ALL BRANCH PIPING CONNECTIONS TO MAINS.
38. INSTALL ALL DIELECTRIC UNIONS IN A MANNER WHICH MAKES THEM READILY ACCESSIBLE FOR FUTURE REPAIR OR REPLACEMENT. BRASS VALVES, FITTINGS, ETC. ARE NOT ACCEPTABLE IN LIEU OF DIELECTRIC UNIONS.
39. PROVIDE A SUPPLEMENTAL CONDENSATE DRIP PAN FOR ALL FAN COIL UNITS AND AIR HANDLING UNITS.
40. PROVIDE FLEXIBLE DUCT CONNECTIONS FOR ALL FAN COIL UNITS, AIR HANDLING UNITS, FANS, ETC.

MECHANICAL SYMBOL LIST

PIPING SYMBOLS

HTHWSR / HTHWSR	HIGH TEMPERATURE HOT WATER SUPPLY/RETURN
MTHWSR / MTHWSR	MEDIUM TEMPERATURE HOT WATER SUPPLY/RETURN
HWSR / HWSR	HOT WATER SUPPLY/RETURN
CWSR / CWSR	CONDENSER WATER SUPPLY/RETURN
CHWSR / CHWSR	CHILLED WATER SUPPLY/RETURN
GSR / GSR	GLYCOL SUPPLY/RETURN
RL / RL	REFRIGERANT LIQUID PIPING
RS / RS	REFRIGERANT SUCTION PIPING
CW / CW	DOMESTIC COLD WATER MAKE-UP
D / D	DRAIN LINE
V / V	VENT LINE

PIPING SYMBOLS

	ARROW INDICATES DIRECTION OF FLOW
	PITCH PIPE DOWN IN DIRECTION OF ARROW
	PIPE ANCHOR
	PIPE GUIDE
	PIPE EXPANSION JOINT
(3'-0"x6'-0")	EXPANSION LOOP (SIZE)
	FLEXIBLE BALL JOINT EXPANSION COMPENSATOR
	CONCENTRIC REDUCER
	ECCENTRIC REDUCER
	HEAT TRACING

BUILDING CODE COMPLIANCE NOTES

1. ENERGY CODE COMPLIANCE NOTE:

TO THE BEST OF MY KNOWLEDGE, BELIEF, AND PROFESSIONAL JUDGMENT, THE PLANS AND SPECIFICATIONS ARE IN COMPLIANCE WITH THE ENERGY CONSERVATION CODE OF NYS.

2. PERMITS:

CONTRACTOR SHALL FILE FOR AND OBTAIN PERMITS FOR ALL MECHANICAL SYSTEMS. PERMITS SHALL COMPLY WITH CHAPTER 1 ADMINISTRATION, TITLE 28 SECTION MC 105.

3. LISTED AND LABELED:

ALL APPLIANCES REGULATED BY NYCMC SHALL BE LISTED AND LABELED AS REQUIRED BY MC 301.4. LABEL INFORMATION SHALL COMPLY WITH REQUIREMENTS OF MC 301.6.

4. VIBRATION ISOLATION:

ALL MECHANICAL EQUIPMENT SHALL BE MOUNTED AND SUPPORTED AS REQUIRED BY MC 301.10.

5. WIND RESISTANCE:

ALL MECHANICAL EQUIPMENT, APPLIANCES AND SUPPORTS THAT EXPOSED TO WIND SHALL BE DESIGNED AND INSTALLED AS PER BC 1609 "WIND LOADS."

6. SEISMIC RESISTANCE:

ALL MECHANICAL SYSTEM SUPPORTS SHALL BE DESIGNED AND INTALLED FOR THE SEISMIC FORCES IN ACCORDANCE WITH BC1 615.

7. FIRE STOPPING COMPLIANCE NOTE:

A. FOR FIRE STOPPING AT ANY FIRE RATED CONSTRUCTION PENETRATION CONTRACTOR SHALL REFER TO SPECIFICATION SECTION 072.70.
B. ALL DUCT AND PIPE PENETRATIONS OF RATED CONSTRUCTION SHALL COMPLY WITH NYC BC 713 & 714.

8. DUCT CONSTRUCTION AND INSTALLATION:

AN AIR DISTRIBUTION SYSTEM SHALL BE DESIGNED AND INSTALLED TO SUPPLY THE REQUIRED DISTRIBUTION OF AIR. THE INSTALLATION OF AN AIR DISTRIBUTION SYSTEM SHALL NOT AFFECT THE FIRE PROTECTION REQUIREMENTS SPECIFIED IN THE NEW YORK CITY BUILDING CODE. DUCTS SHALL BE CONSTRUCTED, BRACED, REINFORCED AND INSTALLED TO PROVIDE STRUCTURAL STRENGTH AND DURABILITY PER NYC MC 603. ALL METTALIC DUCTS SHALL BE CONSTRUCTED AS SPECIFIED IN THE SMACNA HVAC DUCT CONSTRUCTION STANDARDS-METAL AND FLEXIBLE, PER NYC MC 603.4.

9. DUCT INSULATION:

DUCT INSULATION SHALL CONFORM TO THE REQUIREMENTS OF NYC MC 604 AND THE NYC ENERGY CONSERVATION CODE C403.2.9 AND C50 3.2.7. ALL SUPPLY AND RETURN DUCTS SHALL BE INSULATED WITH A MIN. R-6 INSULATION. ALL PLENUMS SHALL BE INSULATED WITH A MIN. R-8 INSULATION.

10. HYDRONIC PIPING:

HYDRONIC PIPING SYSTEMS THAT ARE PART OF HVAC SHALL COMPLY WITH MC CHAPTER 12. PIPE INSULATION IS TO BE INSTALLED IN BUILDINGS SHALL CONFORM TO THE REQUIREMENTS OF MC 1204 AND THE NYC ENERGY CONSERVATION CODE 503.2.10.

FLUID OPERATING TEMPERATURE RANGE AND USAGE (°F)	INSULATION CONDUCTIVITY Btu in / HR/FT / °F	INSULATION CONDUCTIVITY MEAN RATING TEMPERATURE °F	NOM DIA <1"	NOM DIA 1" TO 1.5"	NOM DIA 1.5" TO <4"	NOM DIA 4" TO 8"	NOM DIA 8" <= 8"
>350	0.32 - 0.34	250	4.5	5.0	5.0	5.0	5.0
251 - 350	0.29 - 0.32	200	3.0	4.0	4.5	4.5	4.5
201 - 250	0.27 - 0.30	150	2.5	2.5	2.5	3.0	3.0
141 - 200	0.25 - 0.29	125	1.5	1.5	2.0	2.0	2.0
105 - 140**	0.22 - 0.28	100	1.0	1.0	1.5	1.5	1.5
40 - 60**	0.21 - 0.27	75	0.5	0.5	1.0	1.0	1.0
<40	0.20 - 0.26	50	0.5	0.5	1.0	1.0	1.5

HYDRONIC PIPING SYSTEMS OTHER THAN GROUND SOURCE HEAT PUMP LOOP SYSTEMS SHALL BE TESTED HYDROSTATICALLY AT ONE AND ONE HALF TIMES THE SYSTEM DESIGN OPERATING PRESSURE BUT NOT LESS THAN 100 PSI FOR DURATION OF TEST NOT LESS THAN 2 HOURS. HYDRONIC TESTING SHALL COMPLY WITH MC 1208.

11. MATERIALS:

MATERIALS OF EQUIPMENT DELIVERED TO JOB SITE SHALL BE LABELED OR SHIPPED WITH MANUFACTURER'S CERTIFICATE, OR AREA OR BSA. LABELS AS REQUIRED BY CODE ADMINISTRATION SECTION 28-113.4.4.

12. REFRIGERATION (SYSTEM USING A1 REFRIGERANT):

FACTORY-BUILT, LISTED AND LABELED SELF CONTAINED EQUIPMENT ARE DEEMED TO MEET CODE REQUIREMENTS AS PER MC 1101.2.

REFRIGERANT SYSTEMS ERECTED ON THE PREMISES WITH COPPER TUBING NOT EXCEEDING 5/8" SHALL BE TESTED BY MEANS OF REFRIGERANT CHARGE AT THE SATURATED VAPOR PRESSURE AT 70°F OR HIGHER IN COMPLIANCE WITH MC 1108.

ALL REFRIGERATION PIPING SHALL BE INSTALLED, TESTED AND PLACED IN OPERATION IN ACCORDANCE WITH MC 1107.

ALL REFRIGERATION PIPING SHALL BE INSTALLED IN ACCORDANCE WITH MC 1107, RIGID ENCLOSURES SHALL BE PROVIDED FOR SOFT AN/SEALED COPPER TUBING.

13. EQUIPMENT:

IN ACCORDANCE WITH MC 106.8, ALL EQUIPMENT NOT SHOWN ON STRUCTURAL PLANS SHALL BE PROVIDED WITH MOUNTING SUPPORT.

14. POST SMOKE CONTROL:

IN ACCORDANCE WITH MC 515 AND REQUIREMENTS AS PER CHAPTER 9 OF NYC BC.

TESTING OF MECHANICAL SYSTEMS

TESTING SHALL BE PERFORMED IN ACCORDANCE WITH APPLICABLE BUILDING CODE SECTIONS AND SHALL INCLUDE THE FOLLOWING:

A. CHIMNEYS MC 810
B. NOISE CONTROL MC 928
C. BOILERS AND PRESSURE VESSELS: MC 1011
D. REFRIGERATION SYSTEMS: MC 1108
E. HYDRONIC PIPING SYSTEMS: MC 1208

HVAC DESIGN PARAMETERS

INSIDE AMBIENT DESIGN PARAMETERS (ASSEMBLY AREAS):

SUMMER: 78°F(DB)/50%RH
WINTER: 72°F(DB)

INSIDE AMBIENT DESIGN PARAMETERS (CLASSROOMS/OFFICES):

SUMMER: 78°F(DB)/45%RH
WINTER: 72°F(DB)

INSIDE AMBIENT DESIGN PARAMETERS (KITCHEN):

SUMMER: 82°F(DB)

OUTSIDE AMBIENT DESIGN PARAMETERS FOR AIR HANDLERS:

SUMMER: 89°F(DB)/73°F(WB)

OUTSIDE WINTER AMBIENT DESIGN PARAMETERS:

WINTER TEMP: 11° F(DB)
WIND VELOCITY: 15 MPH

"U-VALUES"

ROOF:	0.033	
WALLS:	0.0906	BTU/HR-FT^2-°F
WHOLE WINDOW:	0.45	BTU/HR-FT^2-°F
SOLAR HEAT GAIN COEFFICIENT:	0.38	BTU/HR-FT^2-°F

MINIMUM OUTDOOR AIR SUPPLY

NUMBER OF OCCUPANTS BASED ON NYC MECHANICAL CODE

SEISMIC RESTRAINTS NOTES

FOR ALL ITEMS THAT ARE REQUIRED TO HAVE SEISMIC SUPPORTS OR RESTRAINTS, SEISMIC PLANS AND SEISMIC BRACING CALCULATIONS MUST BE PREPARED AND STAMPED BY CONTRACTOR'S REGISTERED PROFESSIONAL ENGINEER. THE ENGINEER SHALL PROVIDE INSTALLATION SUPERVISION OF ALL SEISMIC SUPPORTS AND RESTRAINTS. THE CONTRACTOR'S REGISTERED PROFESSIONAL ENGINEER SHALL SUBMIT SIGNED AND SEALED AFFIDAVIT STATES THAT THE INSTALLATION IS IN FULL COMPLIANCE WITH THE SIGNED/SEALED SHOP DRAWINGS AND ALL REQUIRED DETAILS. WILL BE SUBMITTED AS PART OF NEW BUILDING FILING, PRIOR TO C.O. REFER TO SPECIFICATION 15503.

PROJECT: PS 320X

REQUIRED OUTDOOR VENTILATION AIR

ROOM NUMBER	ROOM NAME	AREA (SQ.FT)	NUMBER OF PEOPLE (NYCBC 2014)	REQUIRED OUTDOOR AIR NYCMC 2014: 403.3 O.A./ PERSON	O.A./SQ. FT.	TOTAL O.A.
AHU-6						
216	GYMATORIUM	2787	283	5	0.06	1582
216	STAGE	775	32	10	0.06	367
212	GYM EQ. STORAGE ROOM	120	0	0	0.12	14
216A	HEALTH OFFICE	71	2	5	0.06	14
					TOTAL	1977

REQUIRED OUTDOOR VENTILATION AIR

ROOM NUMBER	ROOM NAME	AREA (SQ.FT)	NUMBER OF PEOPLE (NYCBC 2014)	REQUIRED OUTDOOR AIR NYCMC 2014: 403.3 O.A./ PERSON	O.A./SQ. FT.	TOTAL O.A.
AHU-1						
201	1ST GRADE CLASSROOM	748	35	10	0.12	440
202	KINDERGARTEN CLASSROOM	939	31	10	0.12	473
203	1ST GRADE CLASSROOM	731	34	10	0.12	478
204	KINDERGARTEN CLASSROOM	930	32	10	0.12	492
-	CORRIDOR 2A	593	0	5	0.06	35
301	2ND GRADE CLASSROOM	748	35	10	0.12	440
302	3RD GRADE CLASSROOM	754	35	10	0.12	440
303	2ND GRADE CLASSROOM	731	35	10	0.12	438
304	3RD GRADE CLASSROOM	755	35	10	0.12	443
306	3RD GRADE CLASSROOM	760	35	10	0.12	441
-	CORRIDOR 3A	475	N/A	N/A	0.06	29
401	STAFF LAUNCH ROOM	456	23	5	0.06	142
402	4TH GRADE CLASSROOM	755	35	10	0.12	441
403	TEACHER'S WORKROOM	351	1	10	0.12	52
404	4TH GRADE CLASSROOM	755	35	10	0.12	441
405	SPECIAL ED CLASSROOM	453	21	10	0.12	264
407	WAITING ROOM	69	1	5	0.06	9
407A	GUIDANCE OFFICE	122	1	5	0.06	12
407B	GUIDANCE OFFICE	125	1	5	0.06	13
407C	CONFERENCE ROOM	139	7	5	0.06	43
407D	STOREROOM	58	0	0	0.12	7
409	STORAGE	294	0	0	0.12	35
-	CORRIDOR 4A	810	0	0	0.06	49
501	LIBRARY	969	19	5	0.12	211
502	5TH GR. CLASSROOM	755	35	10	0.12	441
503	READING RESSOURCE ROOM	411	4	0	0.12	49
504	5TH GRADE CLASSROOM	755	35	10	0.12	441
-	CORRIDOR 5A	810	0	0	0.06	49
					TOTAL	6482

REQUIRED OUTDOOR VENTILATION AIR

ROOM NUMBER	ROOM NAME	AREA (SQ.FT)	NUMBER OF PEOPLE (NYCBC 2014)	REQUIRED OUTDOOR AIR NYCMC 2014: 403.3 O.A./ PERSON	O.A./SQ .FT.	TOTAL O.A.
AHU-2						
101	PRE-K CLASSROOM	903	30	10	0.18	463
102	PRE-K CLASSROOM	913	31	10	0.18	474
104	PRINCIPAL OFFICE	339	3	5	0.06	35
105	PRE-K CLASSROOM	805	27	10	0.18	415
106	GENERAL OFFICE	495	5	5	0.06	55
107	WAITING	79	1	5	0.06	10
107A	NURSE'S OFFICE	167	3	5	0.06	25
107B	EXAMINATION ROOM	100	0	5	0.06	6
109	PARENTS/COM. ROOM	278	3	5	0.06	32
111	RECORDS ROOM	112	0	0	0.12	13
-	ENTRY VEST. BIKE	47	N/A	N/A	0.06	3
-	LOBBY	640	7	5	0.06	73
205	1ST GRADE CLASSROOM	748	35	10	0.12	440
206	SPEECH RESOURCE ROOM	351	18	10	0.12	222
207	STORAGE	160	0	10	0.12	19
210	KINDERGARTEN CLASSROOM	887	30	10	0.12	406
-	CORRIDOR 2B	1017	N/A	N/A	0.06	61
305	2ND GRADE CLASSROOM	748	35	10	0.12	440
307	STORAGE	282	N/A	N/A	0.12	34
308	SUPERVISOR	152	1	5	0.06	14
310	EXERCICE ROOM	1191	22	20	0.06	511
-	CORRIDOR 3B	930	0	0	0.06	56
406	4TH GRADE CLASSROOM	787	35	10	0.12	444
408	PROJECT ROOM	1203	58	10	0.12	724
410	STORAGE	130	0	0	0.12	16
	CORRIDOR 4B	930	0	0	0.06	56
505	CUSTODIAL WORKSHOP	397	10	10	0.12	148
505A	CUSTODIAL OFFICE	250	3	5	0.06	30
506	5TH GRADE CLASSROOM	760	35	10	0.12	441
508	MUSIC ROOM	808	41	10	0.12	507
509	STORAGE	281	0	0	0.12	34
510	SPECIAL ED CLASSROOM	534	23	10	0.12	294
-	CORRIDOR 5B	930	0	0	0.06	56
					TOTAL	6557

REQUIRED OUTDOOR VENTILATION AIR

ROOM NUMBER	ROOM NAME	AREA (SQ.FT)	NUMBER OF PEOPLE (NYCBC 2014)	REQUIRED OUTDOOR AIR NYCMC 2014: 403.3 O.A./ PERSON	O.A./SQ. FT.	TOTAL O.A.
AHU-3						
108	CAFETERIA	2167	148	7.5	0.18	1485
115	KITCHEN	1129	7	7.5	0.12	188
115A	NON FOOD STORAGE	78	0	0	0.12	9
115C	LOCKER ROOM (M)	66	0	0	0	0
115D	LOCKER ROOM (W)	67	0	0	0	0
115E	CAN ROOM	58	0	0	0.12	7
					TOTAL	1689

President & CEO
Lorraine Grillo

Board of Trustees
Chancellor Richard A. Carranza, Chairman
Curtis A. Harris
Emily A. Youssouf

SCA

Architecture & Engineering
E. Bruce Barnett, R.A. LEED A.P., Vice President
Elan R. Abrines, P.E., Senior Director, Design Consultant Management
Stanley Dahir, R.A., Director, Quality Control & Construction Support
Marila A. Gomez, P.E., LEED A.P., Senior Director, A&E In-House Design
George D. Roussey, P.E., LEED A.P., Director, Technical Standards
Stacey Spann-Thorn, Director, Operations Support

ARCHITECT
di Domenico + Partners, LLP
37-43 Crescent Street, Long Island City, New York 11101 Tel 212.337.0400 Fax 212.337.3597

MEP ENGINEER
Lilker Associates Consulting Engineers, PC
101 Avenue of the Americas, New York, New York 10013 Tel 212.695.1200 Fax 212.695.1299

STRUCTURAL ENGINEER
Ysrael a Seinuk, PC
228 East 45th Street, New York, New York 10017 Tel 212.687.2233

CIVIL ENGINEER
Langan
360 West 31st Street, 8th Floor, New York, New York 10001 Tel 212.479.5400

ELEVATOR CONSULTANT
AB Consulting
34 Scranton Road, Congers, New York 10920 Tel 845.268.0130

Preliminary
Not For Construction

NOTE: Drawing may be printed at reduced scale

IT IS AVIOLATION OF THE STATE EDUCATION LAW SECTION 7209 (2) FOR ANY PERSON TO ALTER AN ITEM IN ANY WAY UNLESS SUCH PERSON IS ACTING UNDER THE DIRECTION OF A LICENSED PROFESSIONAL ENGINEER, AND THE ENGINEER STAMPS SUCH CHANGES

No.	Date	Revision
3	09/21/2018	100% SUBMISSION
2	06/22/2018	60% SUBMISSION
1	04/13/2018	30% SUBMISSION

Key Plan:

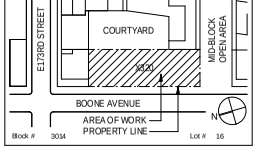

Block # 3034 Lot # 16

SCA Design Manager:	BERNARD FORTE
Project Architect/Engineer:	BRUCE LILKER, P.E.
Discipline Lead:	ANDRE FORTE
Designer:	ANDRE FORTE
Drawn by:	CHRISTOPHER ROZAN
Checked by:	SANTIAGO CABO, P.E.

LLW No.:	Facility Code:	Date:
107404	X320	11/01/2018

Project:
PS 320X - BRONX
NEW SCHOOL

Address:
1570 BOONE AVENUE, BRONX, NY 10460

Drawing Title:
HVAC SYMBOLS, NOTES, AND PARAMETERS

Drawing No.:
M001.00

Sheets in Contract Set:
328 OF 479

Sheets in DOB Set:
- OF 0

9/20/2018 3:18:54 PM

AIR HANDLING UNIT SCHEDULE (AHU - 30% GLYCOL) - REFER TO M401 FOR MODES OF OPERATION *

UNIT NO.	LOCATION	SERVICE	O.A. INTAKE (CFM) MINIMUM	O.A. INTAKE (CFM) MAXIMUM	SUPPLY AIR FAN DATA TOTAL SUPPLY (CFM)	TOTAL S.P. (IN. W.G.)	EXT. S.P. (IN. W.G.)	FAN QTY.	HP	BHP	TYPE	RPM
AHU-1	ROOF	CLASSROOM	6465	19875	19875	6.13	2.8	1	40.0	1x25.85	SWSI	1200
AHU-2	ROOF	CLASSROOM	6560	20320	20320	6.0	2.8	1	40.0	1x26.64	SWSI	1200
AHU-3	ROOF	CAFETERIA/KITCHEN	1690	7565	7565	4.63	2.0	1	15.0	1x8.13	SWSI	1800
AHU-4	ROOF	GYMATORIUM	1980	10100	10100	5.22	2.0	1	15.0	1x11.76	SWSI	1800

UNIT NO.	EXHAUST AIR FAN DATA UNIT EXHAUST (CFM)	TOTAL S.P. (IN. W.G.)	EXT. S.P. (IN. W.G.)	FAN QTY.	HP	BHP	TYPE	RPM	RECOVERY WHEEL DATA SUPPLY AIR (CFM)	EXHAUST AIR (CFM)
AHU-1	19875	4.10	1.5	1	20.0	1x17.63	SWSI	1200	6210	6210
AHU-2	20320	4.02	1.5	1	25.0	1x17.88	SWSI	1200	5775	5775
AHU-3	7565	2.45	1.5	1	7.5	1x42.4	SWSI	1800		
AHU-4	9000	2.88	1.5	1	10.0	1x6.1	SWSI	1200	3000	1900

UNIT NO.	COOLING MODE (SUMMER) SUPPLY EAT (°F) DB	SUPPLY EAT (°F) WB	SUPPLY LAT (°F) DB	SUPPLY LAT (°F) WB	EXHAUST EAT (°F) DB	EXHAUST EAT (°F) WB	EXHAUST LAT (°F) DB	EXHAUST LAT (°F) WB	TOTAL CAPACITY (MBH)	HEATING MODE (WINTER) SUPPLY EAT (°F) DB	SUPPLY EAT (°F) WB	SUPPLY LAT (°F) DB	SUPPLY LAT (°F) WB	EXHAUST EAT (°F) DB	EXHAUST EAT (°F) WB	EXHAUST LAT (°F) DB	EXHAUST LAT (°F) WB	TOTAL CAPACITY (MBH)	A.P.D. (IN. W.G.) SUPPLY	A.P.D. (IN. W.G.) EXHAUST	FACE VEL. (FPM) SUPPLY	FACE VEL. (FPM) EXHAUST
AHU-1	89.0	7.3	69.7	64.5	62.2	59.9	81.5	69.2	189	11.0	11.0	59.5	51.0	70.3	62.3	27.8	27.8	355.5	0.70	0.70	592	420
AHU-2	89.0	7.3	66.2	72.9	70.2	62.3	86.1	69.6	146	11.0	11.0	49.2	49.2	62.1	59.8	23.9	23.9	410	0.65	0.65	593	422
AHU-3																						
AHU-4	89.0	7.3	81.4	67.8	75	62.6	86.9	71.4	594	11.0	11.0	44.5	37.6	70	52.9	17.0	16.9	135	0.58	0.58	469	458

UNIT NO.	RECOVERY WHEEL DATA MOTOR POWER (HP)	FACE AREA SQ	CHILLED WATER COOLING COIL DATA (30% PROPYLENE GLYCOL) EAT (°F) DB	EAT (°F) WB	LAT (°F) DB	LAT (°F) WB	EWT (°F)	LWT (°F)	CAPACITY (MBH) TOTAL	CAPACITY (MBH) SENSIBLE	GPM	WATER P.D. (FT. W.G.)	NO. OF ROWS	FPI	FACE AREA (SQ. FT.)	FACE VEL. (FPM)	MAX. A.P.D. (IN. W.G.)
AHU-1	1.0	3.0	76.4	64.8	53.0	53.37	45.0	55.1.4	816	595	170.1	19.37	8	13	41.08	491.2	0.98
AHU-2	1.0	3.0	79.2	66.4	54.2.0	53.48	45.0	55.0	787	556	166.3	17.33	8	12	41.08	494.6	0.76
AHU-3	N/A	N/A	78.4	66.9	51.7.2	51.46	45.0	55.0.5	347	229	72.0.5	17.10	1.0	13	-	-	-
AHU-4	1.0	1.5	78.3	66.7	51.8.0	51.55	45.0	55.0	454	293	95.9.6	17.43	9	12	-	-	-

UNIT NO.	HOT WATER HEATING COIL DATA (30% PROPYLENE GLYCOL) GPM	WATER P.D. (FT. W.G.)	NO. OF ROWS	FPI	FACE AREA (SQ. FT.)	FACE VEL. (FPM)	MAX. A.P.D. (IN. W.G.)	HEAT WHEEL DATA (COOLING MODE - SUMMER ONLY) EAT (DB °F)	LAT (DB °F)	EWT (°F)	LWT (°F)	MAX. A.P.D. (IN. W.G.)
AHU-1	22.90	1.6.76	1	8	41.08	48.3.8	0.12	69.7	90.66	1.60	120	451.8
AHU-2	14.81	1.6.21	1	10	41.08	49.4.6	0.11	69.7	90.09	1.60	120	269.0
AHU-3	9.58	3.52	-	-	-	-	-	69.7	92.28	1.60	120	186.5
AHU-4	12.78	6.97	-	-	-	-	-	69.7	93.07	1.60	120	256

UNIT NO.	SUPPLY EAT (°F) DB	SUPPLY EAT (°F) WB	SUPPLY LAT (°F) DB	SUPPLY LAT (°F) WB	EXHAUST EAT (°F) DB	EXHAUST EAT (°F) WB	EXHAUST LAT (°F) DB	EXHAUST LAT (°F) WB	TOTAL RECOVERED CAPACITY (MBH)	MOTOR POWER (HP)	FACE AREA SQ	A.P.D. (IN. W.G.) SUPPLY	A.P.D. (IN. W.G.) EXHAUST	FACE VEL. (FPM) SUPPLY	FACE VEL. (FPM) EXHAUST
AHU-1	55	54	68.6	59	75.8	64.6	62.2	59.9	290	1.0	24	0.92	0.92	708	6.37
AHU-2	55	54	68.6	59	75.8	64.6	62.2	59.9	294	1.0	24	0.92	0.92	709	6.38
AHU-3	-	-	-	-	-	-	-	-	-	-	-	-	-	-	-
AHU-4	-	-	-	-	-	-	-	-	-	-	-	-	-	-	-

UNIT NO.	ELECTRICAL V	PH	HZ	FLA	MCA	MOP	DIMENSIONS (IN.) L	W	H	UNIT WEIGHT (LBS)	MODEL	MANUFACTURER	DESCRIPTION
AHU-1	208	3	60	201.5	251.8	35.2.6	456	1.38	122	3.1500	19.5KSFRF-V	MARNA	REFER TO NOTES
AHU-2	208	3	60	21.8	272.5	39.1.5	456	1.38	122	3.1500	20.3KSFRF-V	MARNA	REFER TO NOTES
AHU-3	208	3	60	70	87.5	12.2.5	264	1.10	68	950.0	7.3KSFRF-V	MARNA	REFER TO NOTES
AHU-4	208	3	60	79.75	99.7	13.9.6	328	1.32	71	1.4500	10KSFRF-V	MARNA	REFER TO NOTES

NOTES:
1. FAN MOTORS SHALL COMPLY WITH THE N.Y.C. ENERGY CODE EFFICIENCIES.
2. COILS SHALL HAVE COPPER TUBES WITH ALUMINUM FINS (MAX. 12 FIN/IN.)
3. PROVIDE SEAMLESS STAINLESS STEEL DRAIN PANS.
4. ALL UNITS SHALL BE PROVIDED WITH 2" THROWAWAY PRE-FILTER - MERV-7 (30% EFFICIENCY) AND 12" PLEATED RIGID FINAL FILTER MERV-13 (90%).
5. ALL AHU FANS SHALL BE PROVIDED WITH VARIABLE FREQUENCY DRIVE.
6. PROVIDE CONTROLS PER SECTION AND DRAWING.
7. PROVIDE 2" SPRING WITH SEISMIC RESTRAINT FOR SUPPLY FAN.
8. ACOUSTICAL PERFORMANCE FOR AHU SHALL BE AS INDICATED IN SPECIFICATION.
9. UNIT SHALL BE PROVIDED WITH VARIABLE FREQUENCY DRIVES (VFD) ON SUPPLY AND RETURN FANS WITH MANUAL BYPASS.
10. SUPPLY AND RETURN FANS HAVE SUFFICIENT CAPACITY TO PROVIDE REQUIRED AMOUNT OF AIR INTO EACH SPACE AS INDICATED ON THE FLOOR PLANS WITH ANTICIPATION OF REASONABLE DUCT LEAKAGE.
11. REFER TO SPECIFICATION FOR ADDITIONAL INFORMATION.

DUCT SILENCER SCHEDULE

UNIT NO.	SERVICE	LOCATION	SOUND CRITERIA (NC) BASED ON FACE VEL. OF 2000 FPM OCTAVE BAND CENTER FREQUENCY (HZ) 1 63	2 125	3 250	4 500	5 1000	6 2000	7 4000	8 8000	DUCT DIMENSIONS (IN.) WIDTH	HEIGHT	UNIT LENGTH (IN.)	CFM	MAX. STATIC P.D. (IN. WG.)	SILENCER FACE AREA (SQ. FT.)	MAX. FACE VELOCITY (FPM)	MODEL	MANUFACTURER
ST-1S	AHU-1	5TH FLOOR	4	5	13	24	32	24	18	14	48	36	60	17500	0.11	12	1459	RD-HVF8	VIBRO-ACOUSTICS
ST-1R	AHU-1	5TH FLOOR	4	7	16	29	30	21	13	9	40	34	60	15000	0.12	7.2	2083	RD-HVF7	VIBRO-ACOUSTICS
ST-2S	AHU-2	5TH FLOOR	4	5	13	24	32	24	18	14	40	30	60	17500	0.07	12	1460	RD-HVF8	VIBRO-ACOUSTICS
ST-2R	AHU-1	5TH FLOOR	4	7	16	29	30	21	13	9	32	20	60	7000	0.12	4.4	1590	RD-HVF7	VIBRO-ACOUSTICS
ST-3S	AHU-4	5TH FLOOR	2	5	10	12	12	13	13	8	50	24	36	7500	0.02	6.6	1137	RFL-HVF1	VIBRO-ACOUSTICS
ST-3R	AHU-2	5TH FLOOR	4	7	16	29	30	21	13	9	44	30	60	15000	0.06	12	1250	RD-HVF7	VIBRO-ACOUSTICS
ST-4S	AHU-3	5TH FLOOR	2	5	10	12	12	13	13	8	48	24	36	10000	0.02	8.3	1205	RFL-HVF1	VIBRO-ACOUSTICS
ST-4R	AHU-3	5TH FLOOR	2	5	10	12	12	13	13	8	48	24	36	4500	0.02	6.6	682	RFL-HVF1	VIBRO-ACOUSTICS
ST-5S	AHU-4	5TH FLOOR	2	5	10	12	12	13	13	8	28	18	36	10000	0.02	8.3	1205	RFL-HVF1	VIBRO-ACOUSTICS
ST-5R	AHU-4	5TH FLOOR	2	5	10	12	12	13	13	8	44	22	36	10000	0.02	8.3	1205	RFL-HVF1	VIBRO-ACOUSTICS
ST-6R	AHU-2	5TH FLOOR	2	5	10	12	12	13	13	8	28	14	36	10000	0.02	8.3	1205	RFL-HVF1	VIBRO-ACOUSTICS
VAV	INLET SIZE 6	ALL FLOOR	4	3	7	15	19	17	11	9	12	10	36	SEE FLOOR PLAN	0.10	5.56	1350	RD-UHVF9	VIBRO-ACOUSTICS
VAV	INLET SIZE 8	ALL FLOOR	4	3	7	15	19	17	11	9	14	10	36	SEE FLOOR PLAN	0.10	5.56	1350	RD-UHVF9	VIBRO-ACOUSTICS
VAV	INLET SIZE 10	ALL FLOOR	4	3	7	15	19	17	11	9	16	12	36	SEE FLOOR PLAN	0.10	5.56	1350	RD-UHVF9	VIBRO-ACOUSTICS
VAV	INLET SIZE 12	ALL FLOOR	4	3	7	15	19	17	11	9	16	14	36	SEE FLOOR PLAN	0.10	5.56	1350	RD-UHVF9	VIBRO-ACOUSTICS

NOTES:
1. ALL SILENCERS SHALL HAVE INERT AND VERMIN-PROOF FIBROUS FILL MATERIAL.
2. ALL SILENCERS SHALL BE CONSTRUCTED OF 18 GA. OR HEAVIER SHEET STEEL.

SCHEDULE FOR HOT WATER HEATING COIL

UNIT NO.	LOCATION	SERVICE	MBH	CFM	EAT DB	LAT DB	MAX. FACE VELOCITY FPM	GPM	EWT	LWT	AIR PD	WATER PD	DUCT SIZE	MANUFACTURER
HWC-L1	KITCHEN	KITCHEN	10	2000	63.6	90.96	315	5	120	140	0.7	1.80	16X14	AIRTHERM

NOTES:
1. REFER TO SPECIFICATION FOR ADDITIONAL INFORMATION.

SCHEDULE FOR CEILING MOUNTED SUPPLY AIR DIFFUSERS

CFM RANGE	NECK DIA. (IN.)	MAX DUCT VELOCITY (FPM)	NOMINAL LOUVERED AREA SIZE W X H (IN.)	MAX. NOISE RATING (NC)	MODEL	MANUFACTURER
0-100	6	500	12 X 12	20	E-1A	ANEMOSTAT
101-180	8	500	12 X 12	20	E-1A	ANEMOSTAT
136-175	8	500	24 X 24	20	EPLA	ANEMOSTAT
176-275	10	500	24 X 24	20	EPLA	ANEMOSTAT
276-395	12	500	24 X 24	20	EPLA	ANEMOSTAT
396-615	15	500	24 X 24	20	EPLA	ANEMOSTAT

NOTES:
1. CONTRACTOR TO COORDINATE BORDER TYPE WITH APPROVED CEILING TYPE.
2. DIFFUSERS LOCATED IN INACCESSIBLE TYPE CEILING TO BE PROVIDED WITH YOUNG REGULATOR MODEL 800 AVECABLE OPERATED DAMPERS.
3. KITCHEN DIFFUSERS SHALL BE ALUMINUM WITH CLEAR SATIN ANODIZED FINISH.

SCHEDULE FOR WALL MOUNTED SUPPLY AIR REGISTERS

CFM RANGE	CORE AREA (SQ. FT.)	NOMINAL DUCT SIZE W X H (IN)	ANGLE OF DEFLECTION (DEGREES)	SPACING (IN.)	MAX. NOISE RATING (NC)	MODEL	MANUFACTURER
50-200	0.37	1.0 X 6	22.5	0.75	20	S20H-DB	ANEMOSTAT
201-360	0.68	1.6 X 8	22.5	0.75	20	S20H-DB	ANEMOSTAT
361-450	0.89	1.8 X 8	22.5	0.75	20	S20H-DB	ANEMOSTAT
451-500	1.03	2.4 X 8	22.5	0.75	20	S20H-DB	ANEMOSTAT
501-600	1.52	2.0 X 10	22.5	0.75	20	S20H-DB	ANEMOSTAT
601-700	1.52	2.8 X 8	22.5	0.75	20	S20H-DB	ANEMOSTAT

NOTES:
1. CONTRACTOR SHALL COORDINATE REGISTER'S BORDER TYPE WITH ARCHITECT.
2. CONTRACTOR SHALL COORDINATE REGISTER'S COLOR WITH ARCHITECT.

SCHEDULE FOR CEILING MOUNTED RETURN AIR GRILLES

CFM RANGE	NECK SIZE W X H (IN)	MAX. DUCT VELOCITY (FPM)	CORA AREA (SQ. FT.)	MAX. NOISE RATING (NC)	MODEL	MANUFACTURER
0-160	8 X 8	400	0.37	20	S35-45	ANEMOSTAT
161-340	24 X 2.4	500	3.77	20	S35-45	ANEMOSTAT
341-540	24 X 2.4	500	3.77	20	S35-45	ANEMOSTAT
541-1000	24 X 2.4	500	3.77	20	S35-45	ANEMOSTAT
1001-3500	48 X 4.8	500	15.54	20	S35-45	ANEMOSTAT

NOTES:
1. 36X24 ALUMINUM EGGCRATE REGISTERS SHALL BE USED FOR SMOKE PURGE SYSTEM (REFER TO FLOOR PLANS FOR LOCATIONS)
2. ALL NON-DUCTED GRILLES SHALL BE SIZE 24 X24.
3. CONTRACTOR SHALL COORDINATE REGISTER'S BORDER TYPE WITH APPROVED CEILING TYPE.
4. KITCHEN GRILLES SHALL BE ALUMINUM WITH CLEAR SATIN ANODIZED FINISH MODEL X35-0.

SCHEDULE FOR WALL MOUNTED RETURN AIR GRILLE

CFM RANGE	NECK SIZE W X H (IN.)	MAX DUCT VELOCITY (FPM)	CORA AREA (SQ. FT.)	MAX. NOISE RATING (NC)	MODEL	MANUFACTURER
0-120	10 X 6	400	0.37	20	355RL	ANEMOSTAT
121-300	18 X 6	500	0.63	20	355RL	ANEMOSTAT
301-440	18 X 8	500	0.88	20	355RL	ANEMOSTAT
441-650	22 X 10	500	1.37	20	355RL	ANEMOSTAT
651-900	24 X 12	500	1.82	20	355RL	ANEMOSTAT
651-900	24 X 24	500	1.82	20	355RL	ANEMOSTAT

NOTES:
1. CONTRACTOR SHALL COORDINATE GRILLES COLOR WITH ARCHITECT.

SCHEDULE FOR LOUVERED PENTHOUSE

UNIT NO.	SERVICE	LOCATION	EXTERNAL S.P. (IN OF W.G.)	THROAT SIZE LENGTH (IN)	THROAT SIZE WIDTH (IN)	HEIGHT (IN)	NO. OF TIERS	FREE AREA (SQ.FT.)	MANUFACTURER	MODEL NO.	REMARKS
CIL-1	COMBUSTION IN TAKE	BULKHEAD ROOF	0.50	24	24	20"	3	4 SF	LOREN COOK	TRE	DUCTED SYSTEM

NOTES:
1. ALL UNITS SHALL BE PROVIDED WITH A 24" INSULATED ROOF CURB.
2. LOUVER SHALL BE AMCA 550.

- APPLICATION FOR SERVICE EQUIPMENT PERMITS:

CONTRACTOR SHALL FILE FOR AND OBTAIN EQUIPMENT USE PERMITS FOR ALL EQUIPMENT NOTED WITH ASTERISK (*) IN ACCORDANCE WITH TITLE 28, SECTION MC 105 OF THE NEW YORK CITY MECHANICAL CODE.

SCHEDULE FOR ROUND SUPPLY AIR DIFFUSERS FOR GYMATORIUM

CFM RANGE	NECK DIA. (IN.)	MAX DUCT VELOCITY (FPM)	NOMINAL LOUVERED AREA SIZE DIA (IN.)	MAX. NOISE RATING (NC)	MODEL	MANUFACTURER
396-615	18	500	35	20	C-27	ANEMOSTAT

PLATE AND FRAME HEAT EXCHANGER SCHEDULE

UNIT NO.	SERVICE	LOCATION	COLD SIDE SERVICE	FLUID TYPE	GPM	EWT (°F)	LWT (°F)	WATER P. D. (PSI)	HOT SIDE SERVICE	FLUID TYPE	GPM	EWT (°F)	LWT (°F)	WATER P.D. (PSI)	DESIGN PRESSURE (PSI)	EFFECTIVE SURFACE AREA (SQ. FT.)	HEAT TRANSFER COEFFICIENT (BTU/HR.FT^2.°F)	MODEL	MANUFACTURER
HX-1	SECONDARY HOT WATER LOOP	MEP BOILER ROOM	PERIMETER HTG.	WATER	210	120	140	4.69	BOILER	30% PROPYLENE GLYCOL	109	160	130	9.68	150	159.23	1.577405	S19A-1G10-68-TMTL95	POLARIS

NOTES:
FLANGE CONNECTION, ASME U-STAMP PER SECTION VIII, DIV.1.

President & CEO
Lorraine Grillo

Board of Trustees
Chancellor Richard A. Carranza, Chairman
Curtis A. Harris
Emily A. Vaucsauf

SCA

Architecture & Engineering
E. Bruce Barnett, R.A. LEED A.P., Vice President
Brian R. Abmeier, P.E., Senior Director, Design Consultant Management
Stanley Dahir, R.A., Director, Quality Control & Construction Support
Marilia A. Gomez, P.E., LEED A.P., Senior Director, A&E In-House Design
George D. Roussey, P.E., LEED A.P., Director, Technical Standards
Stacey Spann-Thorn, Director, Operations Support

ARCHITECT
di Domenico + Partners, LLP
37-43 Crescent Street, Long Island City, New York 11101 Tel 212.337.0600 Fax 212.337.3567

MEP ENGINEER
Lilker Associates Consulting Engineers, PC
1101 Avenue of the Americas, New York, New York 10036 Tel 212.695.1000 Fax 212.695.1299

STRUCTURAL ENGINEER
Ysrael a. Seinuk, PC
225 East 45th Street, New York, New York 10017 Tel 212.687.2233

CIVIL ENGINEER
Langan
360 West 31st Street, 8th Floor, New York, New York 10001 Tel 212.479.5400

ELEVATOR CONSULTANT
AB Consulting
34 Scondia Road, Congers, New York 10920 Tel 845.268.0170

Preliminary
Not For Construction

NOTE: Drawing may be printed at reduced scale

IT IS A VIOLATION OF THE STATE EDUCATION LAW SECTION 7209 (2) FOR ANY PERSON TO ALTER AN ITEM IN ANY WAY UNLESS SUCH PERSON IS ACTING UNDER THE DIRECTION OF A LICENSED PROFESSIONAL ENGINEER, AND THE ENGINEER STAMPS SUCH CHANGES

No.	Date	Revision
3	09/21/2018	100% SUBMISSION
2	06/22/2018	60% SUBMISSION
1	04/13/2018	30% SUBMISSION

Key Plan:

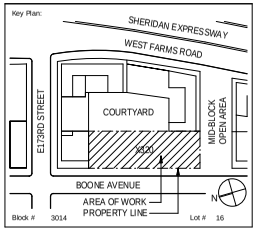

Block # 3014 Lot # 16

SCA Design Manager:	BERNARD FORTE
Project Architect/Engineer:	BRUCE LILKER, P.E.
Discipline Lead:	ANDRE FORTE
Designer:	ANDRE FORTE
Drawn by:	CHRISTOPHER ROZAN
Checked by:	SANTIAGO CABO, P.E.

LLW No.:	Facility Code:	Date:
107404	X320	11/01/2018

Project:
PS 320X - BRONX
NEW SCHOOL

Address:
1570 BOONE AVENUE, BRONX, NY 10460

Drawing Title:
HVAC SCHEDULES SHEET #1

Drawing No.:
M003.00

Sheets in Contract Set: 330 OF 479

Sheets in DOB Set: - OF 0

05/20/2019 3:18:55 PM

+AIR COOLED CHILLER SCHEDULE (30% PROPYLENE GLYCOL) *

UNIT NO.	CAPACITY(TONS)	AMBIENT AIR TEMP.	MAX. COMPRESSOR CAPACITY	TOTAL NUMBER OF MODULE	MIN. CAPACITY OF FULL LOAD	REFRIGERANT TYPE	REFRIGERANT TOTAL CHARGE (LBs)	EVAPORATOR LWT (°F)	EVAPORATOR EWT (°F)	DESIGN G.P.M	EVAPORATOR G.P.M.	EVAPORATOR PD(PSI)	CONDENSER (EACH MODULE) FAN DATA QTY	CONDENSER (EACH MODULE) FAN DATA AMPs (FLA)	ELECTRICAL DATA CIRCUIT NO. 1 MCA(Amps)	ELECTRICAL DATA CIRCUIT NO. 1 MOP(Amps)	ELECTRICAL DATA CIRCUIT NO. 2 MCA(Amps)	ELECTRICAL DATA CIRCUIT NO. 2 MOP(Amps)	UNIT WEIGHT TOTAL (LBs)	ERR	NPLV (KW/TON)	MODEL NO.	DIMENSIONS (LxWxH)	MANUFACTURER	Remarks
CH-1	216	95 °F	15	8		R-410A	160	45	55	505	548 GPM	6	16	5.7	506	600	506	600	17500	10.2	13.7	PACVMV030003-MM	290x96x89	ARCTICHILL	

NOTES:

1. PROVIDE CHILLER WITH MANUFACTURER STEEL SUPPORT BASE RAILS, JUNCTION BOX, DISCONNECT SWITCHES (2 POINT POWER CONNECTION) AND SPRING VIBRATION ISOLATORS.
2. SEE SPECIFICATION FOR ADDITIONAL INFORMATION.
3. AIR COOLED MODULAR CHILLER ACOUSTICAL PERFOMANCE SHALL BE AS INDICATED IN SPECIFICATION.
4. THE CHILLER IS PROVIDED WITH THE ULTRA QUIET PACKAGE WITH EOM FAN MOTORS, INLET GRIDS, DIFFUSERS AND COMPRESSOR WRAPS.
THE CONDENSER FAN DIFFUSERS ARE EXTEND 18" ABOVE THE CHILLER AND THE INLET GRIDS STICKED OUT 12" FROM THE SIDE OF THE CHILLER.

+BOILER SCHEDULE

UNIT TAG & NO.	SETTING ON RELIEF VALVE (PSIG)	RATING BOILER HP	RATING GAS INPUT (1000 BTU/CU. FT.) MBH	RATING OUTPUT, MBH	RATING MIN. OUTPUT AT FULL FIRE AT 120 DEG.°F RETURN WATER TEMP, MBH	RATING SUPPLY TEMP, °F	PRESS. DROP @ 40°F TEMP RISE (IN. W.S.)	RATING RETURN TEMP, °F	RATING DESIGN FLOW RATE, GPM	MIN. FLOW RATE (G.P.M)	RATING MAX FLOW RATE, GPM	RATING BURNER TURNDOWN	RATING FUEL	RATING GAS PRESS. MIN - MAX (IN. W.C.)	BOILER VENT SIZE, IN	BOILER AIR INLET SIZE, IN	BOILER TYPE	ASSEMBLED DIMENSIONS L X W X H (IN.)	WATER VOLUME (GAL)	ELECTRICAL DATA V/HZ/PH	ELECTRICAL DATA AMPs (FLA)	BOILER MODEL	Weight (LB)	Efficiency	MANUFACTURER	Remarks
B-1	75		1800	1710	175	160	2.00 in wg	120	95	0	95	5-1	NG	4-14	10	8	CONDENSING	96X42X66	112	120/60/1	10	VITOCROSSAL 200 CM2-900	2596	95%	VIESSMANN	
B-2	75		1800	1710	175	160	2.00 in wg	120	95	0	95	5-1	NG	4-14	10	8	CONDENSING	96X42X66	112	120/60/1	10	VITOCROSSAL 200 CM2-900	2596	95%	VIESSMANN	

NOTES:

1. BOILER MANUFACTURER SHALL PROVIDE CONTROL PANELS MONITORING AND ALARM OF BOILERS. SEE SPECIFICATION AND DRAWING FOR CONTROL POINTS.
2. PROVIDE CONTROLS PER SPECIFICATION.
3. REFER TO SPECIFICATION FOR COMPLETE SPECIFICATION FOR THE HOT WATER CONDENSING BOILER.
4. BURNERS OF BOILER ARE AN INTERGAL PART OF THE BOILER AND DO NOT HAVE SEPARATE MODEL NUMBER, ETC.

+PUMPS SCHEDULES

UNIT NO.	LOCATION	SERVICE	MANUFACTURER	MODEL	FLUID TYPE	FLUID FLOW (G.P.M)	TOTAL HEAD (FT)	ELECTRICAL DATA MOTOR (HP)	ELECTRICAL DATA RPM	ELECTRICAL DATA VOLT/PH/HZ	REMARK
P-1	MECHANICAL ROOM	PRIMARY HOT WATER LOOP	GRUNDFOS	LCS 15959	GLYCOL PROPYLENE, 30%	85	60	3	1775	208	
P-2	MECHANICAL ROOM	PRIMARY HOT WATER LOOP	GRUNDFOS	LCS 15959	GLYCOL PROPYLENE, 30%	85	60	3	1775	208	
P-3	MECHANICAL ROOM	PRIMARY HOT WATER LOOP	GRUNDFOS	LCS 15959	GLYCOL PROPYLENE, 30%	85	60	3	1775	208	
P-4	MECHANICAL ROOM	SECONARY HOT WATER LOOP	GRUNDFOS	LCS 25957	HOT WATER	210	80	7.5	1775	208	
P-5	MECHANICAL ROOM	SECONARY HOT WATER LOOP	GRUNDFOS	LCS 25957	HOT WATER	210	80	7.5	1775	208	
P-6	MECHANICAL ROOM	CHILLED WATER LOOP	GRUNDFOS	LCS 4012A	GLYCOL PROPYLENE, 30%	505	80	20	1780	208	
P-7	MECHANICAL ROOM	CHILLED WATER LOOP	GRUNDFOS	LCS 4012A	GLYCOL PROPYLENE, 30%	505	80	20	1780	208	

NOTES:

1. ALL PUMPS SHALL BE PROVIDED WITH VARIABLE FREQUENCY DRIVES (VFD).
2. REFER TO THE EQUIPMENT SPECIFICATION FOR ADDITIONAL INFORMATION.
3. ALL PUMPS SHALL BE PROVIDED WITH PREMIUM HIGH EFFICIENCY PUMP.

+EXPANSION TANKS SCHEDULE

UNIT NO.	SERVICE	TANK VOLUME SIZE (DxH)	ACCEPTANCE VOLUME (GAL)	TANK TYPE	MANUFACTURER	MODEL NO.	OPERATING WEIGHT (LBs)	REMARKS
ET-1	PRIMARY HOT GLYCOL SYSTEM	24"x52"	34	VERTICAL	AMTROL	AX-144V	230	
ET-2	SECONDARY HOT WATER SYSTEM	24"x29"	22.6	VERTICAL	AMTROL	AX-80V	155	
ET-3	CHILLED GLYCOL	16"x45"	11.3	VERTICAL	AMTROL	AX-60V	98	

NOTES

1. REFER TO THE EQUIPMENT SPECIFICATION FOR ADDITIONAL INFORMATION.

COMBINATION AIR/DIRT SEPARATOR SCHEDULE

UNIT NO.	PIPE SIZE (IN.)	MODEL	MAX. WORKING PRESSURE	MAX. OPERATING TEMP.	MAX. FLOW RATE	SURFACE AREA (SQ. FT.)	APPROX. WORKING WEIGHT (LB)	DIAMETER (IN.)	HEIGHT(IN.)	MANUFACTURER	REMARKS
AS-1	4	VDT-400	150.00 psi	270 °F	330 GPM		200	8.6	41.7	SPIROTHERM	
AS-2	4	VDT-400	150.00 psi	270 °F	330 GPM		200	8.6	41.7	SPIROTHERM	
AS-3	6	VDT-400	150.00 psi	270 °F	330 GPM		350	12.8	41.7	SPIROTHERM	

NOTES:

1. PROVIDE THE FOLLOWING OPTIONS:
   - BLOW DOWN VALVE (SIZED PER MANUFACTURER'S RECOMMENDATION)
   - SWIN VALVE (WITH HOSE BIB)
   - AIR VENT (INSTALLED & PROVIDED BY MANUFACTURER)
   - BASE RING (ONLY REQUIRED ON FLOOR MOUNTED APPLICATION)
2. VESSEL SHALL BE RATED FOR 150 PSI @ 270 F.
3. PIPING CONNECTION SHALL BE FLANGED.

+SCHEDULE OF ELECTRIC UNIT HEATERS

UNIT NO.	SERVICE LOCATION	WATTS	CFM	MBH	Dt	VOLT/PH/HZ	CONTROL REMARKS	MANUFACTURER	MODEL	REMARKS
EUH-1.1	RPZ-307D	5000 W	350	17	45	208/60/3	BMS	QMARK	MUH05-81	CEILING MOUNTED
EUH-1.2	GROUNDS EQ. ROOM	5000 W	350	17	45	208/60/3	BMS	QMARK	MUH05-81	CEILING MOUNTED
EUH-C.1	WATER METER ROOM-C01	5000 W	350	17	45	208/60/3	BMS	QMARK	MUH05-81	CEILING MOUNTED
EUH-C.2	ELECTRICAL ROOM-CO2	5000 W	350	17	45	208/60/3	BMS	QMARK	MUH05-81	CEILING MOUNTED
EUH-P.1	MECHANICAL ROOM-P01	5000 W	350	17	45	208/60/3	BMS	QMARK	MUH05-81	CEILING MOUNTED
EUH-P.2	MECHANICAL ROOM-P01	5000 W	350	17	45	208/60/3	BMS	QMARK	MUH05-81	CEILING MOUNTED
EUH-B1-P.2							BMS	QMARK	MUH05-81	CEILING MOUNTED

NOTES:

1. ALL ELECTRIC CABINET HEATERS SHALL BE PROVIDED WITH 24V CONTROL, DISCONNECT SWITCH, AND MOUNTED BRACKET
2. REFER TO THE EQUIPMENT SPECIFICATION FOR ADDITIONAL INFORMATION

+HOT WATER CABINET UNIT HEATERS SCHEDULE

UNIT NO.	MANUFACTURER	SERVICE	MODEL NO.	E.W.T °F	L.W.T °F	FLOW (G.P.M)	CORRECTION FACTOR	TOTAL Capacity(BTU/HR)	CFM	Amps	Electrical Data (Voltage, Phase, Hertz)	RPM	Unit Dimensions	Weight (LB)	Remarks
WCUH-1.1	VULCAN	STAIR A	RC-1200-08	140	120	5.46	VELOCITY FACTOR = 0.91 TEMP FACTOR =0.33	31120	860	2.2	115/1/60	1050	"L" 61 X "W" 44 1/8X "H"9 1/2	183	CEILING MOUNTED
WCUH-1.2	VULCAN	STAIR B	RC-1200-08	140	120	5.46	VELOCITY FACTOR = 0.91 TEMP FACTOR =0.33	31120	860	2.2	115/1/60	1050	"L" 61 X "W" 44 1/8X "H"9 1/2	183	CEILING MOUNTED
WCUH-1.3	VULCAN	STAIR C	RC-1200-08	140	120	5.46	VELOCITY FACTOR = 0.91 TEMP FACTOR =0.33	31120	860	2.2	115/1/60	1050	"L" 61 X "W" 44 1/8X "H"9 1/2	183	CEILING MOUNTED
WCUH-1.4	VULCAN	LOBBY	RC-1200-08	140	120	5.46	VELOCITY FACTOR = 0.91 TEMP FACTOR =0.33	31120	860	2.2	115/1/60	1050	"L" 61 X "W" 44 1/8X "H"9 1/2	183	CEILING MOUNTED
WCUH-1.5	VULCAN	LOBBY	RC-1200-08	140	120	5.46	VELOCITY FACTOR = 0.91 TEMP FACTOR =0.33	31120	860	2.2	115/1/60	1050	"L" 61 X "W" 44 1/8X "H"9 1/2	183	CEILING MOUNTED
WCUH-1.6	VULCAN	KITCHEN EXIT	RC-1200-08	140	120	5.46	VELOCITY FACTOR = 0.91 TEMP FACTOR =0.33	31120	860	2.2	115/1/60	1050	"L" 61 X "W" 44 1/8X "H"9 1/2	183	CEILING MOUNTED
WCUH-2.1	VULCAN	STAIR A	RC-1200-08	140	120	5.46	VELOCITY FACTOR = 0.91 TEMP FACTOR =0.33	31120	860	2.2	115/1/60	1050	"L" 61 X "W" 44 1/8X "H"9 1/2	183	CEILING MOUNTED
WCUH-2.2	VULCAN	STAIR B	RC-1200-08	140	120	5.46	VELOCITY FACTOR = 0.91 TEMP FACTOR =0.33	31120	860	2.2	115/1/60	1050	"L" 61 X "W" 44 1/8X "H"9 1/2	183	CEILING MOUNTED
WCUH-2.3	VULCAN	STAIR C	RC-1200-08	140	120	5.46	VELOCITY FACTOR = 0.91 TEMP FACTOR =0.33	31120	860	2.2	115/1/60	1050	"L" 61 X "W" 44 1/8X "H"9 1/2	183	CEILING MOUNTED
WCUH-3.1	VULCAN	STAIR A	RC-1200-08	140	120	5.46	VELOCITY FACTOR = 0.91 TEMP FACTOR =0.33	31120	860	2.2	115/1/60	1050	"L" 61 X "W" 44 1/8X "H"9 1/2	183	CEILING MOUNTED
WCUH-3.2	VULCAN	STAIR B	RC-1200-08	140	120	5.46	VELOCITY FACTOR = 0.91 TEMP FACTOR =0.33	31120	860	2.2	115/1/60	1050	"L" 61 X "W" 44 1/8X "H"9 1/2	183	CEILING MOUNTED
WCUH-3.3	VULCAN	STAIR C	RC-1200-08	140	120	5.46	VELOCITY FACTOR = 0.91 TEMP FACTOR =0.33	31120	860	2.2	115/1/60	1050	"L" 61 X "W" 44 1/8X "H"9 1/2	183	CEILING MOUNTED
WCUH-4.1	VULCAN	STAIR A	RC-1200-08	140	120	5.46	VELOCITY FACTOR = 0.91 TEMP FACTOR =0.33	31120	860	2.2	115/1/60	1050	"L" 61 X "W" 44 1/8X "H"9 1/2	183	CEILING MOUNTED
WCUH-4.2	VULCAN	STAIR B	RC-1200-08	140	120	5.46	VELOCITY FACTOR = 0.91 TEMP FACTOR =0.33	31120	860	2.2	115/1/60	1050	"L" 61 X "W" 44 1/8X "H"9 1/2	183	CEILING MOUNTED
WCUH-4.3	VULCAN	STAIR C	RC-1200-08	140	120	5.46	VELOCITY FACTOR = 0.91 TEMP FACTOR =0.33	31120	860	2.2	115/1/60	1050	"L" 61 X "W" 44 1/8X "H"9 1/2	183	CEILING MOUNTED
WCUH-4.4	VULCAN	4TH FLOOR EXIT	RC-1200-08	140	120	5.46	VELOCITY FACTOR = 0.91 TEMP FACTOR =0.33	31120	860	2.2	115/1/60	1050	"L" 61 X "W" 44 1/8X "H"9 1/2	183	CEILING MOUNTED
WCUH-5.1	VULCAN	STAIR A	RC-1200-08	140	120	5.46	VELOCITY FACTOR = 0.91 TEMP FACTOR =0.33	31120	860	2.2	115/1/60	1050	"L" 61 X "W" 44 1/8X "H"9 1/2	183	CEILING MOUNTED
WCUH-5.2	VULCAN	STAIR B	RC-1200-08	140	120	5.46	VELOCITY FACTOR = 0.91 TEMP FACTOR =0.33	31120	860	2.2	115/1/60	1050	"L" 61 X "W" 44 1/8X "H"9 1/2	183	CEILING MOUNTED

NOTE:

1. PROVIDE CONTROLS PER SPECIFICATION.
2. REFER TO SPECIFICATION FOR ADDITIONAL INFORMATION.
3. ALL CABINET UNIT HEATERS SHALL BE PROVIDED WITH DISCONNECT SWITCHES.

*APPLICATION FOR SERVICE EQUIPMENT PERMITS:

CONTRACTION SHALL FILE AND OBTAIN EQUIPMENT USE PERMITS FOR ALL EQUIPMENTS NOTED WITH ASTERISK (*) IN ACCORDANCE WITH TITLE 26, SECTION MC 106 OF THE NEW CITY MECHANICAL CODE.

President & CEO
Lorraine Grillo

Board of Trustees
Chancellor Richard A. Carranza, Chairman
Curtis A. Harris
Emily A. Youssouf

SCA

Architecture & Engineering
E. Bruce Barnett, R.A. LEED A.P., Vice President
Elan R. Abmen, P.E., Senior Director, Design Consultant Management
Stanley Dahir, R.A., Director, Quality Control & Construction Support
Marila A. Gómez, P.E., LEED A.P., Senior Director, A&E In-House Design
George D. Roussey, P.E., LEED A.P., Director, Technical Standards
Stacey Spann-Thorn, Director, Operations Support

ARCHITECT
di Domenico + Partners, LLP
37-43 Crescent Street, Long Island City, New York 11101 Tel 212.337.0600 Fax 212.337.3567

MEP ENGINEER
Lilker Associates Consulting Engineers, PC
1001 Avenue of the Americas, New York, New York 10018 Tel 212.695.1000 Fax 212.695.1299

STRUCTURAL ENGINEER
Ysrael a Seinuk, PC
225 East 45th Street, New York, New York 10017 Tel 212.687.2233

CIVIL ENGINEER
Langan
360 West 31st Street, 8th Floor, New York, New York 10001 Tel 212.479.5400

ELEVATOR CONSULTANT
AB Consulting
34 Scondia Road, Congers, New York 10920 Tel 845.268.0130

Preliminary
Not For Construction

NOTE: Drawing may be printed at reduced scale

IT IS A VIOLATION OF THE STATE EDUCATION LAW SECTION 7209 (2) FOR ANY PERSON TO ALTER AN ITEM IN ANY WAY UNLESS SUCH PERSON IS ACTING UNDER THE DIRECTION OF A LICENSED PROFESSIONAL ENGINEER, AND THE ENGINEER STAMPS SUCH CHANGES

No.	Date	Revision
3	09/21/2018	100% SUBMISSION
2	06/22/2018	60% SUBMISSION
1	04/13/2018	30% SUBMISSION

Key Plan:

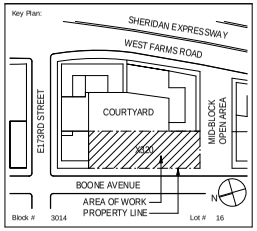

Block # 3014 Lot # 16

SCA Design Manager:	BERNARD FORTE
Project Architect/Engineer:	BRUCE LILKER, P.E.
Discipline Lead:	ANDRE FORTE
Designer:	ANDRE FORTE
Drawn by:	CHRISTOPHER ROZAN
Checked by:	SANTIAGO CABO, P.E.

LLW No:	Facility Code:	Date:
107404	X320	11/01/2018

Project:
PS 320X - BRONX
NEW SCHOOL

Address:
1570 BOONE AVENUE, BRONX, NY 10460

Drawing Title:
HVAC SCHEDULES SHEET #2

Drawing No.: M004.00

Sheets in Contract Set: 331 OF 479

Sheets in DOB Set: - OF 0

05/20/2019 3:18:57 PM

+SPLIT-TYPE HEAT PUMP UNIT SCHEDULE (INDOOR EVAPORATOR/ OUTDOOR CONDENSING UNIT) *1

UNIT NO.	INDOOR EVAPORATOR DATA: SERVICE	LOCATION	TOTAL COOLING CAPACITY MBH	TOTAL HEATING CAPACITY MBH	E.A.T (DB/WB) ºF	Air Flow CFM: LOW	HI	Fan Motor: MOTOR OUTPUT (W)	VOLT/PH/HZ	INDOOR UNIT MODEL NO.	OUTDOOR CONDENSING UNIT DATA: OUTDOOR UNIT MODEL NO.	LOCATION	NO. OF COMPRESSOR	SOUND DATA (dBA)	MCA(Amps)	Electrical Data (Voltage, Phase, Hertz, HP)	REFRIGERANT	TOTAL CHARGE (LBs)	Weight (LB)	MIN. SEER	MANUFACTURER	REMARKS
AC-1	FOOD STORAGE	FOOD STORAGE 115B	33400	38000	80/67	705	920	56	208/60/1	PKA-A36KA	PUZ-HA36NHA4	ROOF	1	49	28	208/1/60	R-410A	6	265	14	MITSUBISHI ELECTRIC	
AC-2	MDF ROOM	MDF ROOM 411	33400	38000	80/67	705	920	56	208/60/1	PKA-A36KA	PUZ-HA36NHA4	ROOF	1	49	28	208/1/60	R-410A	6	265	14	MITSUBISHI ELECTRIC	
AC-3	ELEVATOR MACHINE ROOM	ELEVATOR MACHINE ROOM P02	33400	38000	80/67	705	920	56	208/60/1	PKA-A36KA	PUZ-HA36NHA4	ROOF	1	49	28	208/1/60	R-410A	6	265	14	MITSUBISHI ELECTRIC	
AC-4	IDF SWITCH CLOSET	IDF SWITCH CLOSET 209	24000	26000	80/67	635	775	64	208/60/1	PKA-A24KA	PUZ-HA24NHA4	ROOF	1	48	28	208/1/60	R-410A	6	165	17	MITSUBISHI ELECTRIC	

NOTES:

1. ALL CONTROL AND POWER WIRING BETWEEN INDOOR AND OUTDOOR UNITS TO BE PROVIDED BY THE MECHANICAL CONTRACTOR.
2. ALL AIR CONDITIONING UNIS TO BE PROVIDED WITH WIRED PROGRAMMABLE THERMOSTAT AND LOW AMBIENT CONTROL.
3. TCC TO PROVIDE SPACE SPACE TEMPERATURE AND HUMIDITY SENSOR FOR ALARM ONLY. REFER TO SPECIFICATIONS SECTION 15985.
4. ALL UNITS TO BE PROVIDED WITH TIME-DELAY, FILTER-DRIER, COMPRESSPR SHORT CYCLE PROTECTOR, HIGH AND LOW PRESSURE KIT.
5. ALL UNITS TO BE PROVIDED WITH LOW-AMBIENT CONTROLLER (FLOODED CONDENSER), WINTER START CONTROL EVAPORATOR FREEZE THERMOSTAT.
6. ALL UNITS SHALL BE PROVIDED WITH EXTERIOR DRAIN PAN AND CONDENSATE LEVEL SENSORS, REFER TO DETAIL ON DRAWING M507.00.

+HOT WATER FIN-TUBE RADIATION SCHEDULE

UNIT NO.	EWT (°F)	LWT (°F)	E.A.T (°F)	TUBE DATA: SIZE (IN.)	TUBE DATA: MATERIAL	FIN DATA: SIZE (IN.)	FIN DATA: THICKNESS (IN.)	FIN DATA: MATERIAL	FINS PER LINEAR FT.	HTG. CAP. (BTU/HR PER L.F.)	ENCLOSURE HEIGHT (IN.)	ENCLOSURE TYPE	ROWS OF HTG. ELEMENTS	CORRECTION FACTOR	LOCATION	MANUFACTURER	REMARKS
FTR-A	140	120	65.0	3/4	COPPER	4.25X3.625	0.020	ALUMINUM	40	821.0	24	FLAT TOP DURAVANE 11 STYLE JDV4 24	2	VELOCITY FACTOR = 0.91 TEMP FACTOR =0.33	REFER TO PLANS	VULCAN	STANDARD ENCLOSURE
FTR-B	140	120	65.0	3/4	COPPER	4.25X3.625	0.020	ALUMINUM	40	820.0	BARE ELEMENT	BARE ELEMENT	2	VELOCITY FACTOR = 0.91 TEMP FACTOR =0.33	REFER TO PLANS	VULCAN	ARCHITECTURAL ENCLOSURE

NOTES:

1. RFER TO ARCHITECTURAL DRAWINGS FOR HEIGHT AND TYPE OF FIN-TUBE RADIATION ENCLOSURE.
2. PROVIDE FIN-TUBE RADIATION ELEMENT SUPPORT BRACKETS, SADDLE, HANGERS, CONTINUOUS BAFFLE AS REQUIRED TO INSTALL UNITS.
3. BTU/FT WAS CALCULATED CONSIDERING ALL CORRECTION FACTOR IN SCHEDULE ABOVE.
4. PROVIDE WALL TO WALL FIN-TUBE RADIATION ENCLOSURE, SOME UNITS REQUIRE END ENCLOSURE (SEE FLOOR PLANS). CONTRACTOR SHALL COORDINATE IN THE FIELD.
5. FTR'S SHALL BE PROVIDED WITH MINIMUM 14 GAUGE ENCLOSURES. ALL ENCLOSURES SHALL BE COORDINATED WITH WITH ARCHITECTURAL DRAWINGS.
6. ENCLOSURES SHALL BE FLAT TOP UNLESS OTHERWISE INDICATED.

*APPLICATION FOR SERVICE EQUIPMENT PERMITS:

CONTRACTION SHALL FILE AND OBTAIN EQUIPMENT USE PERMITS FOR ALL EQUIPMENTS NOTED WITH ASTERISK (*) IN ACCORDANCE WITH TITLE 28, SECTION MC 105 OFTHE NEW CITY MECHANICAL CODE.

DIGITAL GLYCOL FEEDER SCHEDULE

UNIT NO.	SERVICE	LOCATION	REFRIGERANT TYPE	TANK CAPACITY (GALLONS)	FLOW RATE@70 PSI	ELECTRICAL DATA: Motor HP	VOLT/PH/HZ	DIMENSIONS (IN.): W	H	D	SHIPPING WEIGHT (LBS)	MODEL	MANUFACTURER	REMARKS
GFT-1	CHILLER	BOILER	PROPYLENE GLYCOL	50	1.8	1/3	120/3/60	28	64	32	330	GMPT-33050	WESSELS COMPANY	
GFT-2	BOILER	BOILER	PROPYLENE GLYCOL	50	1.8	1/3	120/3/60	28	64	32	330	GMPT-33050	WESSELS COMPANY	

NOTES:
1. ENCLOSURE SHALL BE HEAVY DUTY NEMA 4X STYLE, HIGH INPACT THERMOPLASTIC WITH PADLOCKABLE GASKETED LEXAN VIEWING DOOR.
2. DIGITAL CONTROLLER W/ 0-100 PSI 4-20MM OUTPUT SENSOR.

HOT WATER UNIT HEATER SCHEDULE

UNIT NO.	SERVICE	GPM	WATER P.D. (FT. W.G.)	EWT (°F)	LWT (°F)	TOTAL CAPACITY (BTU/HR)	EAT (°F)	MAX. AIR FLOW (CFM)	FAN SPEED (RPM)	ELECTRICAL: FAN HP	V	PH	HZ	AMPS	MODEL	MANUFACTURER	REMARKS
WUH-P-1	MECHANICAL ROOM	4.40	0.29	155.0	115.0	43400	60.0	1400	1000	0.08	120	1	60	2.2	HV-96	VULCAN	REFER TO NOTES
WUH-P-2	MECHANICAL ROOM	4.40	0.29	155.0	115.0	43400	60.0	1400	1000	0.08	120	1	60	2.2	HV-96	VULCAN	REFER TO NOTES

NOTES:
1. UNIT HEATERS SHALL BE PROVIDED WITH 24V CONTROL TRANSFORMER, LONWORK'S WALL MOUNTED TEMPERATURE SENSOR,DISCONNECT SWITCH, AND MOUNTED BRACKET.
2. REFER TO SPECIFICATION FOR ADDITONAL INFORMATION.

HOT WATER AIR CURTAIN SCHEDULE

UNIT NO.	SERVICE	MAX. AIR FLOW (CFM)	FAN DATA: Quantity	MOTOR (HP)	ROWS	G.P.M.	MBH	Range	ELECTRICAL: V	PH	HZ	AMPS	LENGTH (IN.)	MODEL	MANUFACTURER	Remarks
HWAC-1	VEST	5541	4	.05	1	11 GPM	217	36	115	1	60	20.45		HW-S PH12	Mars Air	CEILING MOUNTED

NOTES:
1. ALL AIR CURTAIN SHALL BE PROVIDED WITH 24V CONTROL, INTEGRAL OEM LINE-VOLTAGE THERMOSTAT, DISCONNECT SWITCH, AND MOUNTED BRACKET.
2. DOOR SENSING SHALL BE PROVIDED TO INITIATE AIR CURTAIN AIR FLOW UPON SENSING DOOR AS BEEN OPENED.
3. REFER TO SPECIFICATION FOR ADDITIONAL INFORMATION.

+SCHEDULE OF CONDENSATE DRAIN PUMP

UNIT NO.	Location	SERVICE	GPH	DISCH. PRESS (FT)	ELECTRICAL DATA: Watts	MOTOR (HP)	AMPS	VOLT/PH/HZ	MANUFACTURER	MODEL NO.	REMARKS
CP-1	SEE PLAN	AC-1 CONDENSATE DRAIN	51	20	148 W	1/10	0 W	115/1/60	HARTELL	2A-X-1965 DV	
CP-2	SEE PLAN	AC-2 CONDENSATE DRAIN	51	20	148 W	1/10	0 W	115/1/60	HARTELL	2A-X-1965 DV	
CP-3	SEE PLAN	AC-4 CONDENSATE DRAIN	51	20	148 W	1/10	0 W	115/1/60	HARTELL	2A-X-1965 DV	

+HOT WATER CONVECTOR SCHEDULE1

UNIT NO.	SERVICE	EWT (°F)	LWT (°F)	G.P.M	CORRECTION FACTOR	W.P.D	MBH	Depth	ENCLOSURE HEIGHT (IN.)	Convector Length	MANUFACTURER	MODEL	REMARKS
CONV-1.1	TOILET-115F	140	120	1	VELOCITY FACTOR = 0.91 TEMP FACTOR =0.32	0.597	2.5	0' - 4"	24	4' - 0"	VULCAN	FWG-A	FULLY RECESSED
CONV-1.2	TOILET-107C	140	120	1	VELOCITY FACTOR = 0.91 TEMP FACTOR =0.32	0.597	2.5	0' - 4"	24	4' - 0"	VULCAN	FWG-A	FULLY RECESSED
CONV-1.3	TOILET-103	140	120	1	VELOCITY FACTOR = 0.91 TEMP FACTOR =0.32	0.597	2.5	0' - 4"	24	4' - 0"	VULCAN	FWG-A	FULLY RECESSED
CONV-1.4	TOILET-104A	140	120	1	VELOCITY FACTOR = 0.91 TEMP FACTOR =0.32	0.597	2.5	0' - 4"	24	4' - 0"	VULCAN	FWG-A	FULLY RECESSED
CONV-1.5	TOILET-102A	140	120	1	VELOCITY FACTOR = 0.91 TEMP FACTOR =0.32	0.597	2.5	0' - 4"	24	4' - 0"	VULCAN	FWG-A	FULLY RECESSED
CONV-1.6	TOILET-101A	140	120	1	VELOCITY FACTOR = 0.91 TEMP FACTOR =0.32	0.597	2.5	0' - 4"	24	4' - 0"	VULCAN	FWG-A	FULLY RECESSED
CONV-1.7	TOILET-105A	140	120	1	VELOCITY FACTOR = 0.91 TEMP FACTOR =0.32	0.597	2.5	0' - 4"	24	4' - 0"	VULCAN	FWG-A	FULLY RECESSED
CONV-1.8	TOILET-108B	140	120	1	VELOCITY FACTOR = 0.91 TEMP FACTOR =0.32	0.597	2.5	0' - 4"	24	4' - 0"	VULCAN	FWG-A	FULLY RECESSED
CONV-1.9	TOILET-108B	140	120	1	VELOCITY FACTOR = 0.91 TEMP FACTOR =0.32	0.597	2.5	0' - 4"	24	4' - 0"	VULCAN	FWG-A	FULLY RECESSED
CONV-1.11	LOCKER MEN-115C	140	120	1	VELOCITY FACTOR = 0.91 TEMP FACTOR =0.32	0.597	2.5	0' - 4"	24	4' - 0"	VULCAN	FWG-A	FULLY RECESSED
CONV-1.12	LOCKER WOMEN-115D	140	120	1	VELOCITY FACTOR = 0.91 TEMP FACTOR =0.32	0.597	2.5	0' - 4"	24	4' - 0"	VULCAN	FWG-A	FULLY RECESSED
CONV-2.1	TOILET GIRLS-213	140	120	1	VELOCITY FACTOR = 0.91 TEMP FACTOR =0.32	0.597	2.5	0' - 4"	24	4' - 0"	VULCAN	FWG-A	FULLY RECESSED
CONV-3.1	TOILET GIRLS-311	140	120	1	VELOCITY FACTOR = 0.91 TEMP FACTOR =0.32	0.597	2.5	0' - 4"	24	4' - 0"	VULCAN	FWG-A	FULLY RECESSED
CONV-4.1	GIRLS TOILET-415	140	120	1	VELOCITY FACTOR = 0.91 TEMP FACTOR =0.32	0.597	2.5	0' - 4"	24	4' - 0"	VULCAN	FWG-A	FULLY RECESSED
CONV-5.1	GIRLS-513	140	120	1	VELOCITY FACTOR = 0.91 TEMP FACTOR =0.32	0.597	2.5	0' - 4"	24	4' - 0"	VULCAN	FWG-A	FULLY RECESSED
CONV-5.2	BOYS-515	140	120	1	VELOCITY FACTOR = 0.91 TEMP FACTOR =0.32	0.597	2.5	0' - 4"	24	4' - 0"	VULCAN	FWG-A	FULLY RECESSED
CONV-5.3	TOILET STAFF-511	140	120	1	VELOCITY FACTOR = 0.91 TEMP FACTOR =0.32	0.597	2.5	0' - 4"	24	4' - 0"	VULCAN	FWG-A	FULLY RECESSED
CONV-5.4	CUST. LOCKER-507	140	120	1	VELOCITY FACTOR = 0.91 TEMP FACTOR =0.32	0.597	2.5	0' - 4"	24	4' - 0"	VULCAN	FWG-A	FULLY RECESSED

NOTES:

1. PROVIDE CONTROLS PER SPECIFICATION.
2. REFER TO SPECIFICATION FOR ADDITIONAL INFORMATION.
3. ALL CONVECTOR SHALL BE PROVIDED WITH ACCESS DOORS.

President & CEO
Lorraine Grillo

Board of Trustees
Chancellor Richard A. Carranza, Chairman
Curtis A. Harris
Emily A. Youssouf

NYC School Construction Authority

Architecture & Engineering
E. Bruce Barrett, R.A. LEED A.P., Vice President
Elan R. Abneri, P.E., Senior Director, Design Consultant Management
Stanley Dahir, R.A., Director, Quality Control & Construction Support
María A. Gómez, P.E., LEED A.P., Senior Director, A&E In-House Design
George D. Roussey, P.E., LEED A.P., Director, Technical Standards
Stacey Spann-Thom, Director, Operations Support

ARCHITECT
di Domenico + Partners, LLP
37-43 Crescent Street, Long Island City, New York 11101 Tel 212.337.0400 Fax 212.337.3567

MEP ENGINEER
Lilker Associates Consulting Engineers, PC
1001 Avenue of the Americas, New York, New York 10018 Tel 212.695.1000 Fax 212.695.1299

STRUCTURAL ENGINEER
Ysrael a Seinuk, PC
228 East 45th Street, New York, New York 10017 Tel 212.687.2233

CIVIL ENGINEER
Langan
360 West 31st Street, 8th Floor, New York, New York 10001 Tel 212.479.5400

ELEVATOR CONSULTANT
AB Consulting
34 Scandia Road, Congers, New York 10920 Tel 845.268.0170

Preliminary
Not For Construction

NOTE: Drawing may be printed at reduced scale

IT IS A VIOLATION OF THE STATE EDUCATION LAW SECTION 7209 (2) FOR ANY PERSON TO ALTER AN ITEM IN ANY WAY UNLESS SUCH PERSON IS ACTING UNDER THE DIRECTION OF A LICENSED PROFESSIONAL ENGINEER, AND THE ENGINEER STAMPS SUCH CHANGES

No.	Date	Revision
3	09/21/2018	100% SUBMISSION
2	06/22/2018	60% SUBMISSION
1	04/13/2018	30% SUBMISSION

Key Plan:

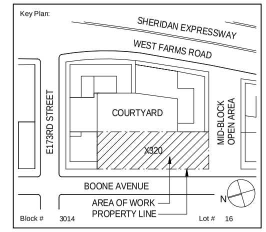

Block # 3014 Lot # 16

SCA Design Manager: BERNARD FORTE
Project Architect/Engineer: BRUCE LILKER, P.E.
Discipline Lead: ANDRE FORTE
Designer: ANDRE FORTE
Drawn by: CHRISTOPHER ROZAN
Checked by: SANTIAGO CABO, P.E.

LLW No.: 107404 | Facility Code: X320 | Date: 11/01/2018

Project:
PS 320X - BRONX
NEW SCHOOL

Address:
1570 BOONE AVENUE, BRONX, NY 10460

Drawing Title:
HVAC SCHEDULES SHEET #3

Drawing No.:
M005.00

Sheets in Contract Set: 332 OF 479

Sheets in DOB Set: - OF 0

9/20/2018 3:18:58 PM

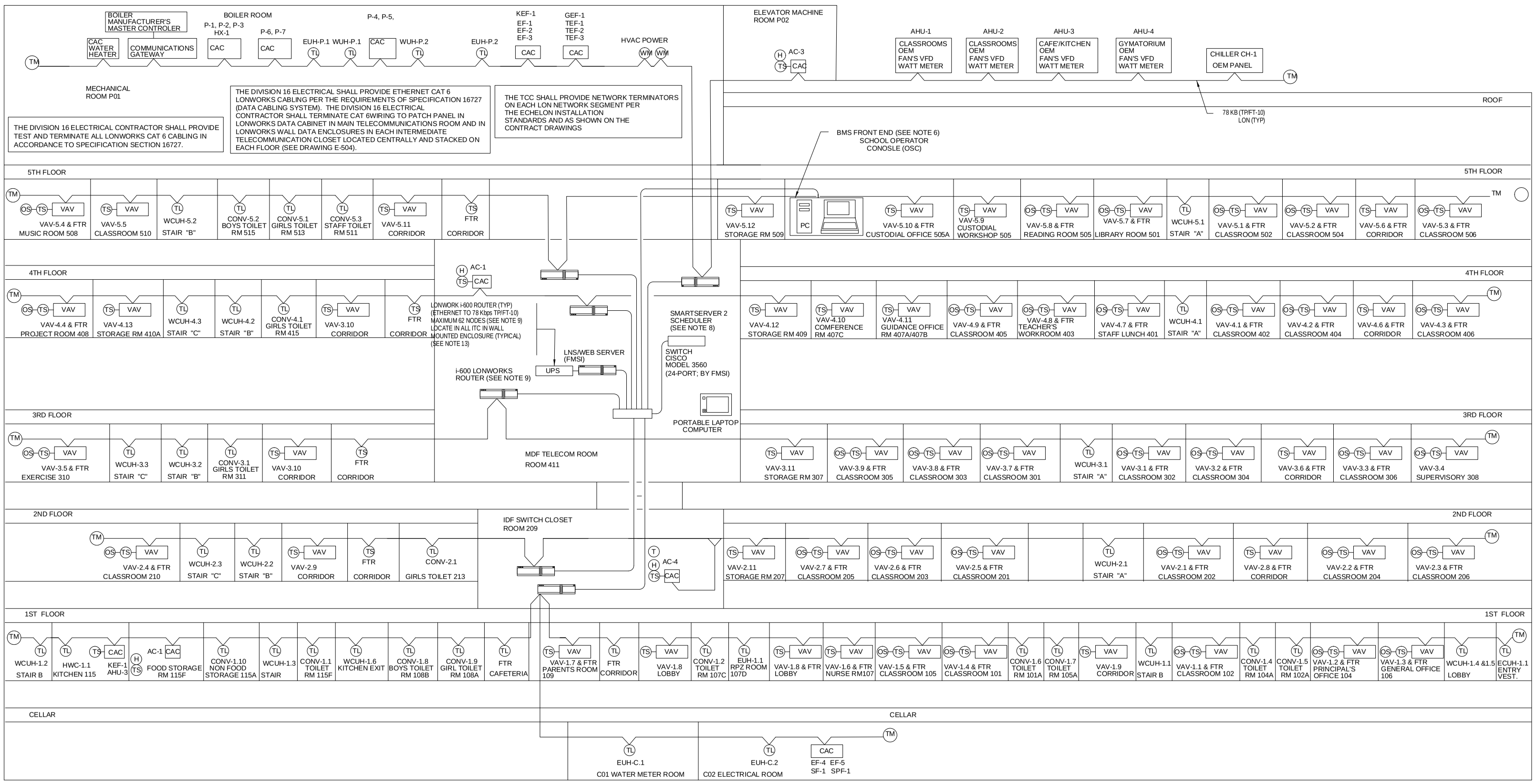

SCHOOL LONWORKS SYSTEM CONTROL ARCHITECTURE

NEW YORK CITY
DEPARTMENT OF EDUCATION (NYCDOE)
WIDE AREA NETWORK (WAN)
(TCP/IP) ETHERNET LAN (NOTE 3)

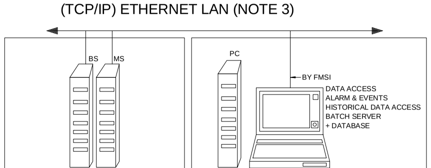

MAIN & BACKUP I/0 SERVERS
PROVIDED BY THE FACILITY MANAGEMENT SYSTEMS INTEGRATOR (FMSI) (SEE NOTE 4)
44-46 VERNON BLVD.
LONG ISLAND CITY, NY

CENTRALIZED HOST CONTROL STATION (CHCS)
PROVIDED BY THE FACILITY MANAGEMENT SYSTEMS INTEGRATOR (FMSI) (SEE NOTE 4)
44-46 VERNON BLVD., LONG ISLAND CITY, NY

SYMBOLS

Symbol	Description
VAV	VARIABLE AIR VOLUME BOX
CAC	TYPICAL (ID#) LON FIELD PANEL-SUPERVIOSRY CONTROL PANEL R- INDICATES (ROOFTOP UNIT)
H	HUMIDITY SENOSRS (SEE NOTE 11)
TS	SPACE TEMPERATURE SENOSR
CO_2	CARBON DIOXIDE SENOSR (SEE NOTE 7)
———	78 KILO BAUD LOCAL OPERATING NETWORK (LON) (TP/FT-10) FREE TOPOLOGY BY TCC
———	SCOPE OF WORK BOUNDARY
———	BOUNDARY OF MAIN TELECOMMUNICATIONS ROOM
———	ETHERNET (CAT 6) PROVIDED BY DIV. 16 SECTION 16727

BMS	BUILDING MANAGEMENT SYSTEM
BS	BACK-UP DATABASE & HMI OSFTWARE STORAGE
CAC	CUSTOM APPLICATION CONTROLLER (CAC)
CHCS	CENTRAL HOST CONTROL STATION
FMSI	FACILITY MANAGEMENT SYSTEMS INTEGRATOR
HMI	HUMAN MACHINE INTERFACE
IP	INTERNET PROTOCOL
ITC	INTERMEDIATE TELECOMMUNICATIONS CLOSET
LON	LOCAL OPERATING NETWORK
MS	MAIN DATABASE & HMI OSFTWARE STORAGE
MTR	MAIN TELECOMMUNICATIONS ROOM
PC	PEROSNAL COMPUTER
OSC	SCHOOL OPERATING CONOSLE
TCC	TEMPERATURE CONTROL CONTRACTOR
TCP	TRANSMISSION CONTROL PROTOCOL
TP	TWISTED PAIR
TYP	TYPICAL
UPS	UNINTERRUPTIBLE POWER SUPPLY
VFD	VARIABLE FREQUENCY DRIVE (WITH LONCARD)
WAN	WIDE AREA NETWORK

NOTES:

1. ALL WORK PROVIDED BY THE TEMPERATURE CONTROL CONTRACTOR (TCC) SHALL COMPLY WITH THE NEW YORK CITY SCHOOL CONSTRUCTION AUTHORITY (SCA) CONTRACT DRAWINGS AND SPECIFICATIONS AS FOLLOWS:

   SECTION 15985 - SEQUENCE OF OPERATIONS
   SECTION 15970 - TEMPERATURE CONTROL SYSTEM-LONWORKS BMS/DDC WITH SCHOOL OPERATING CONOSLE.
2. ALL WORK PROVIDED BY THE FACILITY MANAGEMENT SYSTEMS INTEGRATOR (FMSI) SHALL COMPLY WITH THE NEW YORK CITY SCHOOL CONSTRUCTION AUTHORITY (SCA) SPECIFICATIONS AS FOLLOWS:
   SECTION 15985 - SEQUENCE OF OPERATIONS - (APPLICABLE SECTIONS)
   SECTION 15970 - TEMPERATURE CONTROL SYSTEM-LONWORKS BMS/DDC WITH SCHOOL OPERATING CONOSLE (APPLICABLE SECTIONS)
   SECTION 15973 - FACILITY MANAGEMENT SYSTEMS INTEGRATION.
3. NEW AND EXISTING SCHOOLS UNDERGOING MAJOR MODERNIZATION SHALL BE INTEGRATED BY THE FMSI TO THE NEW YORK CITY DEPARTMENT OF EDUCATION (NYCDOE) CENTRALIZED HOST CONTROL STATION USING THE NYCDOE ETHERNET WIDE AREA NETWORK (WAN) OVER TRANSMISSION CONTROL PROTOCOL (TCP) OVER INTERNET PROTOCOL (IP) WITH VIRTUAL PRIVATE NETWORK (VPN). THE CENTRALIZED HOST CONTROL STATION IS TO BE LOCATED AT THE BUREAU OF SUPPLIES (BOS) BUILDING LOCATED AT 44-46 VERNON BOULEVARD, LONG ISLAND CITY, NEW YORK. THE MAIN SERVER AND BACKUP SERVER ARE ALOS TO BE LOCATED AT THE BUREAU OF SUPPLIES (BOS) BUILDING.
4. THE FACILITY MANAGEMENT SYSTEMS INTEGRATOR (FMSI) SHALL PROVIDE ALL ASOSCIATED HARDWARE AND OSFTWARE FOR THE CENTRALIZED HOST CONTROL STATION. THE CENTRALIZED HOST CONTROL IS TO PROVIDE THE FOLLOWING: GLOBAL WEB ACCESS FOR EACH INDIVIDUAL SCHOOL PROVIDED WITH A LONWORKS CONTROL NETWORK ACCESS, ALARM AND EVENTS, AND HISTORICAL DATA ACCESS MAIN SERVER AND BACKUP SERVER FOR THE ENTIRE NEW YORK CITY DEPARTMENT OF EDUCATION LONWORKS CONTROL NETWORK SHALL BE LOCATED AT THE BUREAU OF SUPPLIES (BOS) BUILDING.
5. THE TEMPERATURE CONTROL CONTRACTOR (TCC) SHALL BE RESPONSIBLE FOR THE INSTALLATION OF THE LONWORKS CONTROL NETWORK IN EACH INDIVIDUAL SCHOOL AND SHALL ALOS PROVIDE A PORTABLE LAPTOP COMPUTER (POT) AS SPECIFIED ON A SCHOOL BY SCHOOL BASIS.
6. THE FACILITY MANAGEMENT SYSTEMS INTEGRATOR (FMSI) SHALL PROVIDE FOR THE BUILDING MANAGEMENT SYSTEM (BMS): SCHOOL OPERATOR CONOSLE (OSC) FRONT - END HARDWARE, THE FRONT - END OSFTWARE, SYSTEM GRAPHICS (GUI), LNS SERVER, UPS AND CISCO 3560 SWITCH AS SPECIFIED ON A SCHOOL BY SCHOOL BASIS.
7. THE TEMPERATURE CONTROL CONTRACTOR (TCC) SHALL PROVIDE CARBON DIOXIDE SPACE SENOSRS IN ADDITION TO HUMIDITY TRANSMITTERS AND TEMPERATURE SENOSRS IN ASSEMBLY SPACES SUBJECT TO INTERMITTENT OCCUPANCY i.e. AUDITORIUMS, CAFETERIAS, GYMNASIUMS, ETC. SEE SEQUENCE OF OPERATIONS REQUIREMENTS SECTION 15985. PRIMARY CONTROL DEVICES ARE TO BE WIRED DIRECTLY TO THE CONTROLLER. SECONDARY CONTROL DEVICES (I.E. CO2, OAT, OAH, OAE) MAY BE CONNECTED EITHER WIRED DIRECTLY TO THE CONTROLLER OR VIA THE LON NETWORK.
8. THE TCC SHALL PROVIDE ECHELON i-LON SMART SERVER 2, OR APPROVED EQUAL, FOR SCHEDULING PER THE FMSI REQUIREMENTS. THE TCC SHALL ALOS PROVIDE i-LON 600 ROUTERS, OR APPROVED EQUAL IN A FULL SIZED DATA CABINET, LOCATED IN THE MAIN TELECOMMUNICATIONS ROOM. THE DATA CABINET IS TO BE PROVIDED BY THE DIVISION 16 ELECTRICAL CONTRACTOR COMPLETE WITH PATCH PANEL, AND SHALL UTILIZE NATURAL VENTILATION TO ACCOMMODATE THE LONWORKS EQUIPMENT AND DEVICES. THE TCC SHALL MOUNT THE LONWORKS DEVICES SUCH AS THE i-LON SMART SERVER 2, ILON 600 ROUTER, ETC. IN THE LONWORKS DATA CABINET.
9. THE TCC SHALL PROVIDE ADDITIONAL ROUTERS AS REQUIRED FOR EACH INDIVIDUAL 78 Kbps (TP/FT-10) LON SEGMENT WITH MAXIMUM 62 NODES OR BASED ON CONTROL DATA THROUGHPUT REQUIREMENTS. SEE SPECIFICATIONS FOR BANDWIDTH & SYSTEM PERFORMANCE CRITERIA. SEC. 15970.

(NOTES 10, 11, 12, 13 CONTINUED ON THE RIGHT BORDER)

President & CEO
Lorraine Grillo

Board of Trustees
Chancellor Richard A. Carranza, Chairman
Curtis A. Harris
Emily A. Youssouf

NYC School Construction Authority

Architecture & Engineering
E. Bruce Barrett, R.A. LEED A.P., Vice President
Elan R. Abneri, P.E., Senior Director, Design Consultant Management
Stanley Dahir, R.A., Director, Quality Control & Construction Support
María A. Gómez, P.E., LEED A.P., Senior Director, A&E In-House Design
George D. Roussey, P.E., LEED A.P., Director, Technical Standards
Stacey Spann-Thom, Director, Operations Support

ARCHITECT
di Domenico + Partners, LLP
37-43 Crescent Street, Long Island City, New York 11101 Tel 212.337.0400 Fax 212.337.3567

MEP ENGINEER
Lilker Associates Consulting Engineers, PC
1001 Avenue of the Americas, New York, New York 10018 Tel 212.695.1000 Fax 212.695.1299

STRUCTURAL ENGINEER
Ysrael a Seinuk, PC
228 East 45th Street, New York, New York 10017 Tel 212.687.2233

CIVIL ENGINEER
Langan
360 West 31st Street, 8th Floor, New York, New York 10001 Tel 212.479.5400

ELEVATOR CONSULTANT
AB Consulting
34 Scandia Road, Congers, New York 10920 Tel 845.268.0170

Preliminary
Not For Construction

NOTE: Drawing may be printed at reduced scale

IT IS A VIOLATION OF THE STATE EDUCATION LAW SECTION 7209 (2) FOR ANY PERSON TO ALTER AN ITEM IN ANY WAY UNLESS SUCH PERSON IS ACTING UNDER THE DIRECTION OF A LICENSED PROFESSIONAL ENGINEER, AND THE ENGINEER STAMPS SUCH CHANGES

No.	Date	Revision
3	09/21/2018	100% SUBMISSION
2	06/22/2018	60% SUBMISSION
1	04/13/2018	30% SUBMISSION

Key Plan:

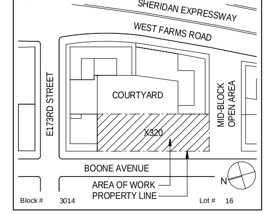

Block # 3014 Lot # 16

SCA Design Manager:	BERNARD FORTE
Project Architect/Engineer:	BRUCE LILKER, P.E.
Discipline Lead:	ANDRE FORTE
Designer:	ANDRE FORTE
Drawn by:	CHRISTOPHER ROZAN
Checked by:	SANTIAGO CABO, P.E.

LLW No.: 107404 | Facility Code: X320 | Date: 11/01/2018

Project:
PS 320X - BRONX
NEW SCHOOL

Address:
1570 BOONE AVENUE, BRONX, NY 10460

Drawing Title:
HVAC LONWORKS SYSTEM CONTROL ARCHITECTURE DIAGRAM

Drawing No.:
M404.00

Sheets in Contract Set: 355 OF 479

Sheets in DOB Set: - OF 0

9/20/2018 3:20:34 PM

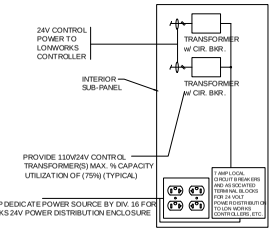

NOTE:
LONWORKS 24 VOLT POWER DISTRIBUTION ENCLOSURE FURNISHED BY TCC AND INSTALLED BY DIV. 16 CONTRACTOR

NOTE:

1. THE TCC SHALL PROVIDE 24VAC TO THOSE MISC. CONTROL DEVICES WHICH ARE NOT POWERED DIRECTLY FROM A UNITARY HVAC SYSTEM. TCC TO COORDINATE WITH MECHANICAL CONTRACTOR AND EQUIPMENT VENDORS FOR CONTROL DEVICE POWER.

LOCATION OF PANEL:

STORAGE ROOM 107A
"CEILING OF THE CORRIDOR NEAR CHANGING ROOM 212"
STORAGE ROOM 301

24 V POWER DISTRIBUTION ENCLOSURE (INSIDE VIEW OF PANEL)

NOT TO SCALE

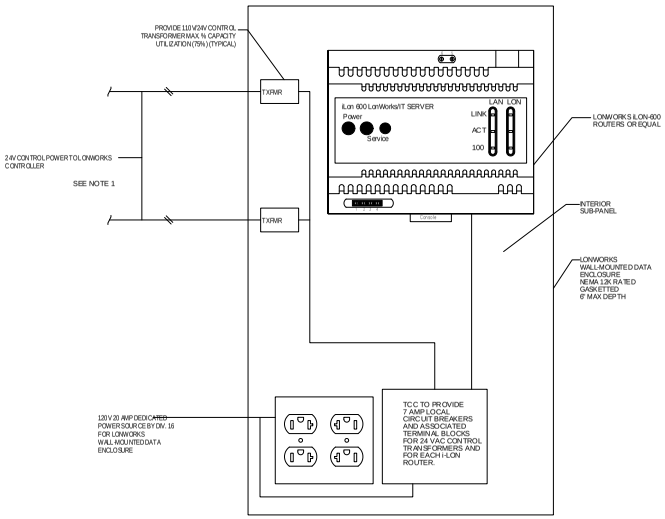

NOTE:
LONWORKS WALL MOUNTED DATA ENCLOSURE FURNISHED BY TCC AND INSTALLED BY DIV. 16 CONTRACTOR

NOTE:

1. THE TCC SHALL PROVIDE 24VAC TO THOSE MISC. CONTROL DEVICES THAT ARE NOT POWERED DIRECTLY FROM A UNITARY HVAC SYSTEM. TCC TO COORDINATE WITH MECHANICAL CONTRACTOR AND EQUIPMENT VENDORS FOR CONTROL DEVICE POWER.

LONWORKS WALL-MOUNTED DATA ENCLOSURE DETAIL FOR SINGLE i-LON 600 MOUNTING

(INSIDE VIEW OF PANEL)
NOT TO SCALE
(LOCATED IN INTERMEDIATE TELECOM CLOSET)

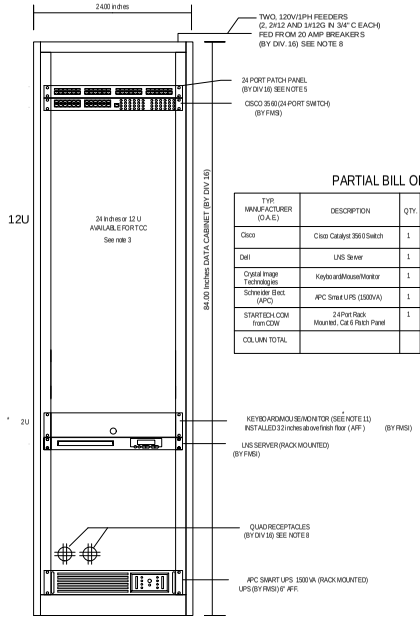

PARTIAL BILL OF MATERIALS FOR LONWORKS DATA CABINET

TYP. MANUFACTURER (O.A.E.)	DESCRIPTION	QTY.	TYP. PART #	DIMENSIONS (WxDxH) in	WEIGHT	DISSIPATED HEAT	ELECTRIC POWER	EQUIVALENT "Us" IN HEIGHT
Cisco	Cisco Catalyst 3560 Switch	1	3560-G-24TS	17.5x11.8x1.73	8.5 Lbs	290 BTU / h	120V, 1AMP	1U
Dell	LNS Server	1	R320	17.4x29x1.73	44 Lbs	1,195 BTU / h	120 V, 3AMP	1U
Crystal Image Technologies	Keyboard/Mouse/Monitor	1	RM-116-2U	17.3x25.6x1.73	32 Lbs	165 BTU / h	120V, 1AMP	2U (SEE NOTE 11)
Schneider Elect. (APC)	APC Smart UPS (1500VA)	1	SMX1500RM2U	17x19.4x3.5	54.6 Lbs	40 95 BTU / h	120 V, 12AMP	2U
STARTECH.COM from CDW	24 Port Rack Mounted, Cat 6 Patch Panel	1	CKPANL 4S24	19(L)x2.2(W)X1.7(H)	20.8 OZ	———	———	1U
COLUMN TOTAL					140 Lbs Approx.	5 705 BTU/h SEE NOTE 10	17AMP	

LONWORKS DATA CABINET DETAILS

NOT TO SCALE

LONWORKS DATA CABINET DETAIL
IN MAIN TELECOM ROOM
(OVERALL DIMENSIONS: 84"(H) x 24"W x 36"(D)

NOTES:

1. FOR MORE DETAILS ON COMPONENTS SEE SPEC. SECTIONS AS REFERENCED.
2. 1U = 2 INCHES VERTICAL.
3. SPACE IS AVAILABLE FOR CONTRACTOR'S USE. (BACK PANEL FOR INSTALLING ROUTERS, SMART SERVER (2.0) AND CONTROL TRANSFORMERS (IF ANY) SHALL BE SO INSTALLED (ON BACK RAILS) THAT COMPONENTS AS INSTALLED DO NOT INHIBIT CABINET DOOR CLOSING. COORDINATE SELECTION, FURNISHING AND INSTALLATION OF COMPONENTS WITH FMSI.
4. PANEL CONSTRUCTION AND COMPONENT LAYOUT AND INSTALLATION DETAILS SHALL BE SUBMITTED BY THE CONTRACTOR TO FMSI FOR APPROVAL.
5. PATCH PANEL SHALL BE REQUIRED FOR ROUTERS INSTALLED OUTSIDE THE LON CABINET (i.e. IN INTERMEDIATE TELECOM CLOSETS, OR SEPARATELY FROM THE LON CABINET, BUT IN MAIN TELECOM ROOM).
6. POWER SUPPLY FROM UPS IS DISTRIBUTED THROUGH OUTLET SWITCH ARE A PART OF THE UPS. INCOMING 1 PH. 120VAC CIRCUIT FOR THE UPS IS EXPECTED TO BE FROM EMERGENCY GENERATOR DISTRIBUTION SYSTEM.
7. POWER SUPPLY THAT DOES NOT COME THROUGH UPS IS USED (IN THE FIELD FOR MISC. USES) DIRECTLY FROM THE QUAD RECEPTACLE.
8. INCOMING 120VAC (1 PH, N, G) CIRCUIT FEEDERS (ONE FROM NORMAL AC SOURCE AND ONE FROM EMERGENCY GENERATOR DISTRIBUTION) SHALL TERMINATE IN OUTLET BOXES MOUNTED QUAD RECEPTACLES TO BE INSTALLED ON THE INSIDE ON ONE OF THE SIDES OF THE CABINET NEAR THE BOTTOM OF THE CABINET. THE RECEPTACLE GETTING THE FEED FROM THE EMERGENCY GENERATOR POWER DISTRIBUTION SHALL BE INDEUBLY LABELED TO INDICATE SO. THE INCOMING FEEDER WIRES SHALL ENTER THROUGH KNOCK-OUTS IN THE TOP SHEET OF THE CABINET AND SUITABLY INSTALLED AND SUPPORTED INSIDE THE CABINET. THE CONDUIT INSTALLATION FOR THESE FEEDERS SHALL BE COORDINATED ACCORDINGLY. (CONDUITS TO BE INSTALLED OUTSIDE THE MOUNTING RAILS SO AS NOT TO INTERFERE WITH THE RACK MOUNTED EQUIPMENT).
9. "6Y DIV. 15/ DIV. 16 / FMSI" IMPLIES FURNISHED AND INSTALLED BY RESPECTIVE ENTITIES (i.e. GC / FMSI). INSTALLATION INCLUDES ALL NECESSARY INSTALLATION HARDWARE.
10. THE HEAT DISSIPATED (ESTIMATED VALUES AS INDICATED) IS TO BE VENTED OUT OF THE CABINET NATURALLY THROUGH VENTS ON THE TWO SIDES (NO FANS / MECHANICAL VENTILATION IS CONSIDERED NECESSARY) CABINET MANUFACTURER TO CONFIRM THIS FEATURE.
11. THE KEYBOARD, MOUSE AND 20" MONITOR ARE EXPECTED TO BE ASSEMBLED ON A RACK-MOUNTED TRAY. WHILE THE PART # IS INDICATED, IF NECESSARY CRYSTAL IMAGES TECHNOLOGIES MAY OFFER ALTERNATIVE PART #. FMSI TO CONFIRM WHILE APPROVING THE CABINET SUBMITTAL (INCLUDING DIMENSIONS - 1U OR 2U).
12. THE CABINET SHALL HAVE LOCKABLE, CLEAR PLEXIGLASS DOOR IN THE FRONT AND REAR. THE TWO SIDES AND TOP SHALL HAVE SHEET METAL, BOTTOM SHALL BE OPEN.

President & CEO
Lorraine Grillo

Board of Trustees
Chancellor Richard A. Carranza, Chairman
Curtis A. Harris
Emily A. Youssouf

SCA
NEW YORK CITY
School Construction Authority

Architecture & Engineering
E. Bruce Barnett, R.A. LEED A.P., Vice President
Elan R. Abines, P.E., Senior Director, Design Consultant Management
Stanley Dahr, R.A., Director, Quality Control & Construction Support
Maria A. Gómez, P.E., LEED A.P., Senior Director, A&E In-House Design
George D. Roussey, P.E., LEED A.P., Director, Technical Standards
Stacey Spann-Thorn, Director, Operations Support

ARCHITECT
di Domenico + Partners, LLP
37-48 Crescent Street, Long Island City, New York 11101 Tel 212.337.0400 Fax 212.337.3987

MEP ENGINEER
Lilker Associates Consulting Engineers, PC
1001 Avenue of the Americas, New York, New York 10018 Tel 212.695.1000 Fax 212.695.1299

STRUCTURAL ENGINEER
Ysrael a Seinuk, PC
228 East 45th Street, New York, New York 10017 Tel 212.687.2233

CIVIL ENGINEER
Langan
360 West 31st Street, 8th Floor, New York, New York 10001 Tel 212.479.5400

ELEVATOR CONSULTANT
AB Consulting
34 Sconda Road, Congers, New York 10920 Tel 845.268.0170

Preliminary
Not For Construction

NOTE: Drawing may be printed at reduced scale

IT IS A VIOLATION OF THE STATE EDUCATION LAW SECTION 7209 (2) FOR ANY PERSON TO ALTER AN ITEM IN ANY WAY UNLESS SUCH PERSON IS ACTING UNDER THE DIRECTION OF A LICENSED PROFESSIONAL ENGINEER, AND THE ENGINEER STAMPS SUCH CHANGES

No.	Date	Revision
3	09/21/2018	100% SUBMISSION
2	06/22/2018	60% SUBMISSION
1	04/13/2018	30% SUBMISSION

Key Plan:

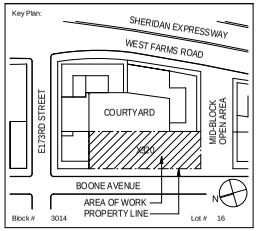

Block # 3014 Lot # 16

SCA Design Manager:	BERNARD FORTE
Project Architect/Engineer:	BRUCE LILKER, P.E.
Discipline Lead:	ANDRE FORTE
Designer:	ANDRE FORTE
Drawn by:	CHRISTOPHER ROZAN
Checked by:	SANTIAGO CABO, P.E.

LLW No.:	Facility Code:	Date:
107404	X320	11/01/2018

Project:
PS 320X - BRONX
NEW SCHOOL

Address:
1570 BOONE AVENUE, BRONX, NY 10460

Drawing Title:
HVAC LONWORKS SYSTEM CONTROL PANEL

Drawing No.:
M405.00

Sheets in Contract Set:
356 OF 479

Sheets in DOB Set:
- OF 0

PM 4:20:23 8/13/2020

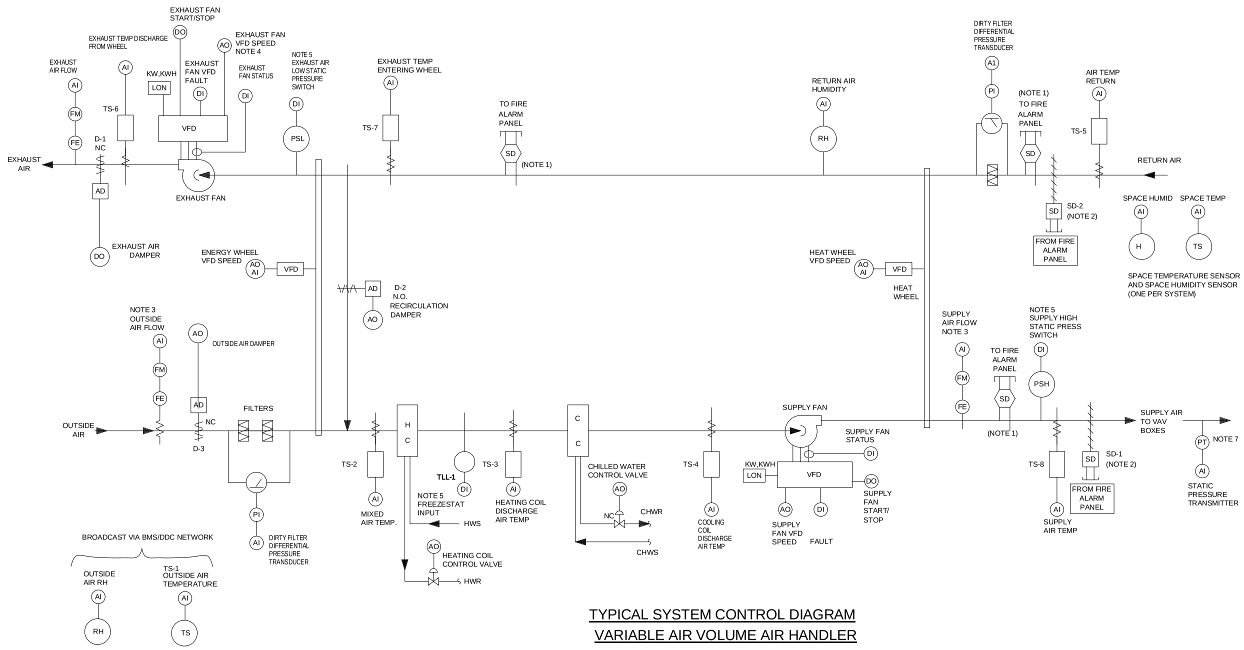

TYPICAL SYSTEM CONTROL DIAGRAM
VARIABLE AIR VOLUME AIR HANDLER
AHU-1 AND AHU-2

No.	Point Name	[illegible]
1	Outside Air Temp	[illegible]
2	Outside Air Humidity	[illegible]
3	Mixed Air Temp	[illegible]
4	Heating Coil Discharge Temp	[illegible]
5	Supply Air Temp	[illegible]
6	Return Air Temp	[illegible]
7	Return Air Humidity	[illegible]
8	Space Temp	[illegible]
9	Space Humidity	[illegible]
10	Dirty Filter Alarms	[illegible]
11	Freezestat Alarm	[illegible]
12	Supply Air Static Pressure	[illegible]
13	Supply Air Static Pressure Setpoint	[illegible]
14	SF High Static Pressure	[illegible]
15	EF Low Suction Pressure	[illegible]
16	Outside Air Damper	[illegible]
17	Exhaust Air Damper	[illegible]
18	Recirculation Air Damper	[illegible]
19	Cooling Coil Valve	[illegible]
20	Heating Coil Valve	[illegible]
21	Outside Air Flow	[illegible]
22	Supply Fan Status	[illegible]
23	Supply Fan VFD	[illegible]
24	Supply Fan VFD S/S	[illegible]
25	Supply Fan VFD Fault	[illegible]
26	Supply Fan VFD Speed	[illegible]
27	Supply Fan Failure	[illegible]
28	Exhaust Fan Status	[illegible]
29	Exhaust Fan VFD	[illegible]
30	Exhaust Fan VFD S/S	[illegible]
31	Exhaust Fan VFD Fault	[illegible]
32	Exhaust Fan VFD Speed	[illegible]
33	Exhaust Fan Failure	[illegible]
34	Common Fire Alarm	[illegible]
36	Supply Air Temp Setpoint	[illegible]
37	Manual Supply Air Temp Override	[illegible]
38	HVAC Mode	[illegible]
39	Occupancy Mode	[illegible]
40	Exhaust Air Flow	[illegible]
41	Supply Air Flow	[illegible]
42	Exhaust Temp Entering Energy Wheel	[illegible]
43	Exhaust Temp Discharge From Energy Wheel	[illegible]
44	Energy Wheel Rotation Sensor	[illegible]
45	Energy Wheel VFD Speed	[illegible]
46	Heat Wheel Rotation Sensor	[illegible]
47	Heat Wheel VFD Speed	[illegible]

X = Contractor to provide quantity as required to include all instances of the indicated feature. Include multiple points within each mechanical system as necessary. Coordinate with equipment vendor.

Notes:
1. The points listed herein are the minimum points required for the control and monitoring of this equipment. This point list is typical for each mechanical/electrical system of this type. If the sequence of operation requires additional or differing information it must be provided by the respective provider of the controls for this type of equipment as coordinated by the General and Mechanical Contractors.
2. The TCC shall provide all digital alarm logic. All digital alarms shall be part of the LNS database.
3. The FMSI will provide all trending and analog alarming via the Wonderware Software.
4. Provide Lon communication connection to this device mapping all required points into the LNS database.
5. Provide Occupied and Unoccupied setpoints.
6. Provide accumulated air flow for validation of purge-mode and for permanent validation of occupant ventilation
7. Provide manual reset device. Note that this device both alarms in the BMS and is hardwired to the VFD's for shutdown of the fans in all operating conditions of the VFD.
8. NVO is network variable output. NVI is network variable input.
9. Static Pressure sensor to be field located as per note 7 on the drawing.

NOTES:

1. DUCT SMOKE DETECTORS SHALL BE PROVIDED IN MAIN SUPPLY AND RETURN DUCT FOR SYSTEMS OVER 2,000 CFM AND ALSO UPSTREAM OF EACH STORY RETURN DUCT/ RISER CONNECTION WHERE RETURN AIR RISERS SERVE TWO OR MORE STORIES FOR SYSTEMS OVER 15,000 CFM.
2. SMOKE DAMPERS SHALL BE PROVIDED IN MAIN SUPPLY AND RETURN DUCTS FOR SYSTEMS OVER 15,000 CFM.
3. INTEGRATE FLOW MEASURING APPARATUS INTO THE NETWORK.
4. EXHAUST FAN VFD SHALL BE ADJUSTED TO MAINTAIN REQUIRED EXHAUST RATE AS MEASURED BY EXHAUST AIR FLOW MONITORING STATION.
5. SAFETY DEVICES SHALL BE HARDWIRED TO THE FAN STARTER CIRCUIT IN ADDITION TO THE DDC SYSTEM. COORDINATE WITH THE VFD VENDOR FOR SHUTDOWN UNDER ALL MODES OF OPERATION.
6. DIVISION 16 FIRE ALARM CONTRACTOR SHALL FURNISH FIRE ALARM SYSTEM COMPLIANT SMOKE DETECTORS TO THE MECHANICAL CONTRACTOR WHO SHALL IN TURN FURNISH THEM TO THE CENTRAL ROOFTOP UNIT OR CENTRAL AIR HANDLING UNIT MANUFACTURER FOR FACTORY INSTALLATION OR TO THE SHEET METAL CONTRACTOR FOR FIELD DUCTWORK INSTALLATION FOR THE FLOOR RETURN/RISER RETURN CONNECTIONS AS APPLICABLE. DIVISION 16 CONTRACTOR SHALL PROVIDE ALL SIGNAL AND CONTROL POWER WIRING.
7. THE SUPPLY DUCT STATIC PRESSURE SENSOR SHALL BE LOCATED IN ACCORDANCE WITH ASHRAE 90.1-13 SECTION 6.5.3.2.2 (SUCH THAT THE INITIAL CONTROLLER SETPOINT (SUBJECT TO RESET) IS NO GREATER THAN 1.2" WC). IF LOCATING THE STATIC PRESSURE TO ACHIEVE THIS RESULTS IN SENSOR BEING LOCATED DOWNSTREAM OF MAJOR DUCT SPLITS, SENSORS SHALL BE INSTALLED IN EACH MAJOR BRANCH TO INSURE THAT STATIC PRESSURE CAN BE MAINTAINED IN EACH DUCT. STATIC PRESSURE SET POINT SHALL BE RESET UP OR DOWN BASED ON THE ZONE REQUIRING THE MOST PRESSURE; I.E. THE SET POINT IS RESET UNTIL ONE ZONE DAMPER IS NEARBY WIDE OPEN.

ABBREVIATIONS

- TLL-1 TEMPERATURE LOW LIMIT
- TS-1 OUTSIDE AIR TEMP
- TS-2 MIXED AIR TEMP
- TS-3 HEATING COIL AIR TEMPERATURE
- TS-4 COOLING COIL DISCHARGE AIR TEMP
- TS-5 RETURN AIR TEMP
- TS-6 EXHAUST TEMP DISCHARGE FROM ENERGY WHEEL
- TS-7 EXHAUST TEMP ENTERING ENERGY WHEEL
- TS-8 SUPPLY AIR TEMP
- DI DIGITAL INPUT
- DO DIGITAL OUTPUT
- AI ANALOG INPUT
- AO ANALOG OUTPUT
- RH RELATIVE HUMIDITY
- FE FLOW ELEMENT
- PSL PRESSURE SWITCH LOW
- PSH PRESSURE SWITCH HIGH
- PT PRESSURE TRANSMITTER
- AD DPR ACTUATOR

President & CEO
Lorraine Grillo

Board of Trustees
Chancellor Richard A. Carranza, Chairman
Curtis A. Harris
Emily A. Youssouf

SCA NYC School Construction Authority

Architecture & Engineering
E. Bruce Barrett, R.A. LEED A.P., Vice President
Elan R. Abneri, P.E., Senior Director, Design Consultant Management
Stanley Dahr, R.A., Director, Quality Control & Construction Support
Maria A. Gómez, P.E., LEED A.P., Senior Director, A&E In-House Design
George D. Roussey, P.E., LEED A.P., Director, Technical Standards
Stacey Spann-Thom, Director, Operations Support

ARCHITECT
di Domenico + Partners, LLP
37-43 Crescent Street, Long Island City, New York 11101 Tel 212.337.0400 Fax 212.337.3567

MEP ENGINEER
Lilker Associates Consulting Engineers, PC
1001 Avenue of the Americas, New York, New York 10018 Tel 212.695.1000 Fax 212.695.1299

STRUCTURAL ENGINEER
Ysrael a Seinuk, PC
228 East 45th Street, New York, New York 10017 Tel 212.687.2233

CIVIL ENGINEER
Langan
360 West 31st Street, 8th Floor, New York, New York 10001 Tel 212.479.5400

ELEVATOR CONSULTANT
AB Consulting
34 Scandia Road, Congers, New York 10920 Tel 845.268.0170

Preliminary
Not For Construction

NOTE: Drawing may be printed at reduced scale

IT IS A VIOLATION OF THE STATE EDUCATION LAW SECTION 7209 (2) FOR ANY PERSON TO ALTER AN ITEM IN ANY WAY UNLESS SUCH PERSON IS ACTING UNDER THE DIRECTION OF A LICENSED PROFESSIONAL ENGINEER, AND THE ENGINEER STAMPS SUCH CHANGES

No.	Date	Revision
3	09/21/2018	100% SUBMISSION
2	06/22/2018	60% SUBMISSION
1	04/13/2018	30% SUBMISSION

Key Plan:
SHERIDAN EXPRESSWAY
WEST FARMS ROAD
E173RD STREET
COURTYARD
X320
MID-BLOCK OPEN AREA
BOONE AVENUE
AREA OF WORK
PROPERTY LINE
N
Block # 3014 Lot # 16

SCA Design Manager:	BERNARD FORTE
Project Architect/Engineer:	BRUCE LILKER, P.E.
Discipline Lead:	ANDRE FORTE
Designer:	ANDRE FORTE
Drawn by:	CHRISTOPHER ROZAN
Checked by:	SANTIAGO CABO, P.E.

LLW No.: 107404 Facility Code: X320 Date: 11/01/2018

Project:
PS 320X - BRONX
NEW SCHOOL

Address:
1570 BOONE AVENUE, BRONX, NY 10460

Drawing Title:
HVAC AUTOMATIC TEMPERATURE CONTROL DIAGRAM SHEET #1

Drawing No.:
M406.00

Sheets in Contract Set: 357 OF 479

Sheets in DOB Set: - OF 0

9/20/2018 3:20:35 PM

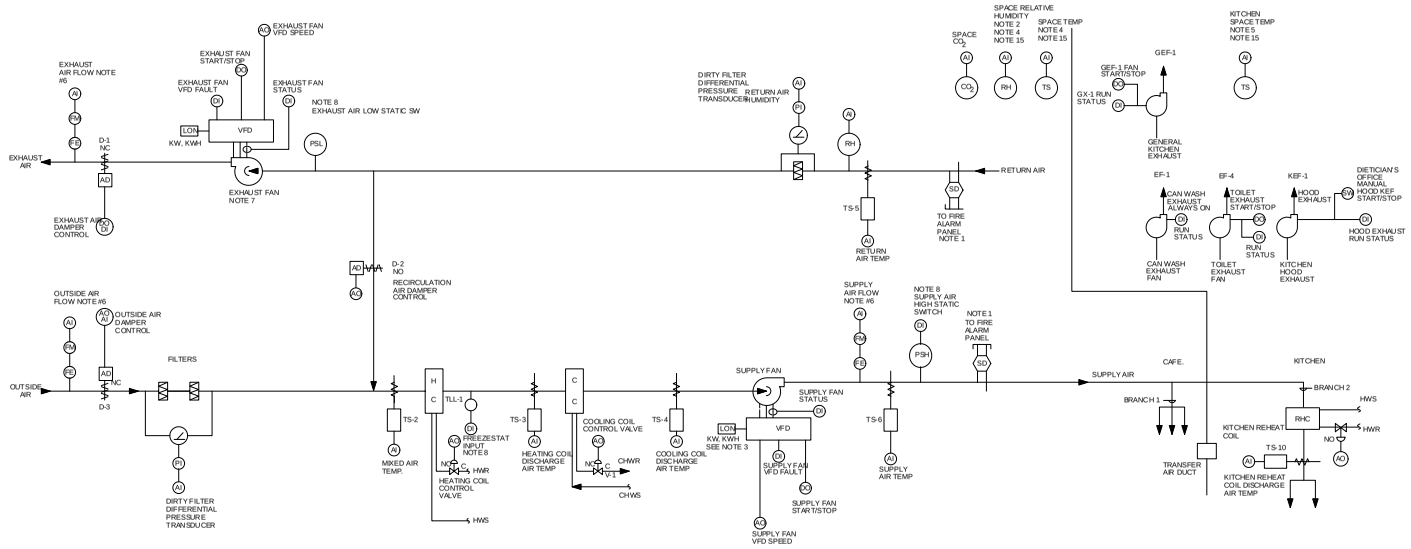

NOTES:

1. CONTROL WIRING OF SMOKE DETECTORS AND SMOKE DAMPERS IS BY DIV.16.
2. PROVIDE ONE SPACE HUMIDITY SENSOR PER SYSTEM AS SHOWN ON THE DRAWINGS.
3. SUPPLY FAN AND EXHAUST FAN SHALL HAVE SCHEDULED START/STOP COMMAND.
4. DEVICES MOUNTED IN CAFETERIA
5. DEVICES MOUNTED IN KITCHEN
6. INTEGRATE AIR FLOW MEASURING APPARATUS INTO THE BMS/DDC NETWORK.
7. PROVIDE VARIABLE FREQUENCY DRIVES FOR SUPPLY AND EXHAUST FANS. VARIABLE FREQUENCY DRIVES USED TO FACILITATE BALANCING PROCEDURE.
8. SAFETY SHUTDOWN DEVICES SHALL BE HARDWIRED TO THE FAN STARTER CIRCUITS IN ADDITION TO THE DDC SYSTEM. COORDINATE WITH VFD VENDORS FOR SHUTDOWN UNDER ALL MODES OF OPERATION.
9. FAN ELECTRICAL USAGE (KW, KWH) IS AVAILABLE FOR EACH FAN FROM VFD DRIVES.
10. NOT USED.
11. PROVIDE ONE OUTSIDE AIR FLOW MEASURING STATION FOR EACH OUTSIDE AIR INTAKE PORT.
12. DUCT SMOKE DETECTORS SHALL BE PROVIDED IN MAIN SUPPLY AND RETURN DUCT FOR SYSTEMS OVER 2,000 CFM.
13. NOT USED.
14. DIVISION 16 FIRE ALARM CONTRACTOR SHALL FURNISH FIRE ALARM SYSTEM COMPLIANT SMOKE DETECTORS TO THE MECHANICAL CONTRACTOR WHO SHALL IN TURN FURNISH THEM TO THE CENTRAL ROOFTOP UNIT OR CENTRAL AIR HANDLING UNIT MANUFACTURER FOR FACTORY INSTALLATION. DIVISION 16 CONTRACTOR SHALL PROVIDE ALL SIGNAL AND CONTROL POWER WIRING.
15. PROVIDED BY AHU OEM. INSTALLATION AND WIRED BY TCC.
16. SMOKE DAMPERS SHALL BE PROVIDED IN MAIN SUPPLY AND RETURN DUCTS FOR SYSTEMS OVER 15,000 CFM.

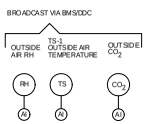

ABBREVIATIONS

TS-1	OUTSIDE AIR TEMP	AI	ANALOG INPUT
TS-2	MIXED AIR TEMP	AO	ANALOG OUTPUT
TS-3	HEATING COIL DISCHARGE AIR TEMP	LON	LONWORKS NETWORK CONNECTION
TS-4	COOLING COIL DISCHARGE AIR TEMP	PSL	PRESSURE SWITCH LOW
TS-5	RETURN AIR TEMP	PSH	PRESSURE SWITCH HIGH
TS-6	SUPPY AIR TEMP	AD	DPR ACTUATORS
FE	FLOW ELEMENT	RH	RELATIVE HUMIDITY
FM	FLOW METER	H	HUMIDITY SENSOR
DI	DIGITAL INPUT	DPT	DIFFERENTIAL PRESSURE TRANSDUCER
DO	DIGITAL OUTPUT	OEM	ORIGINAL EQUIPMENT MANUFACTURER
		PI	PRESSURE INDICATOR

TYPICAL SYSTEM CONTROL DIAGRAM
SINGLE ZONE VARIABLE AIR VOLUME (SZVAV) AIR HANDLER
KITCHEN AND CAFETERIA
AHU-3

President & CEO
Lorraine Gillo

Board of Trustees
Chancellor Richard A. Carranza, Chairman
Curtis A. Harris
Emily A. Youssouf

SCA

Architecture & Engineering
E. Bruce Barnett, R.A. LEED A.P., Vice President
Elias R. Abinader, P.E., Senior Director, Design Consultant Management
Stanley Dahir, R.A., Director, Quality Control & Construction Support
Maria A. Gomez, P.E., LEED A.P., Senior Director, A&E In-House Design
George D. Roussey, P.E., LEED A.P., Director, Technical Standards
Stacey Sparrin-Thorn, Director, Operations Support

ARCHITECT
di Domenico + Partners, LLP
37-43 Crescent Street, Long Island City, New York 11101 Tel 212.337.0400 Fax 212.337.3597

MEP ENGINEER
Lilker Associates Consulting Engineers, PC
1001 Avenue of the Americas, New York, New York 10018 Tel 212.695.1000 Fax 212.695.1299

STRUCTURAL ENGINEER
Ysrael A Seinuk, PC
228 East 45th Street, New York, New York 10017 Tel 212.687.2233

CIVIL ENGINEER
Langan
360 West 31st Street, 8th Floor, New York, New York 10001 Tel 212.479.5400

ELEVATOR CONSULTANT
AB Consulting
34 Scandia Road Congers, New York 10920 Tel 845.268.0130

Preliminary
Not For Construction

NOTE: Drawing may be printed at reduced scale

IT IS A VIOLATION OF THE STATE EDUCATION LAW SECTION 7209 (2) FOR ANY PERSON TO ALTER AN ITEM IN ANY WAY UNLESS SUCH PERSON IS ACTING UNDER THE DIRECTION OF A LICENSED PROFESSIONAL ENGINEER, AND THE ENGINEER STAMPS SUCH CHANGES

No.	Date	Revision
3	09/21/2018	100% SUBMISSION
2	06/22/2018	60% SUBMISSION
1	04/13/2018	30% SUBMISSION

Key Plan

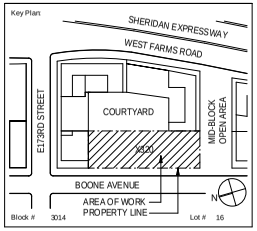

Block # 3014 Lot # 16

SCA Design Manager:	BERNARD FORTE
Project Architect/Engineer:	BRUCE LILKER, P.E.
Discipline Lead:	ANDRE FORTE
Designer:	ANDRE FORTE
Drawn by:	CHRISTOPHER ROZAN
Checked by:	SANTIAGO CABO, P.E.

LLW No:	Facility Code:	Date:
107404	X320	11/01/2018

Project:
PS 320X - BRONX
NEW SCHOOL

Address:
1570 BOONE AVENUE, BRONX, NY 10460

Drawing Title:
HVAC AUTOMATIC TEMPERATURE CONTROL DIAGRAM SHEET #2

Drawing No.
M407.00

Sheets in Contract Set:
358 OF 479

Sheets in DOB Set:
- OF 0

9/20/2018 3:20:35 PM

Reference No.	Point Name	Analog Input	Analog Output	Digital Input	Digital Output	String Value	Rate of Variable	Totalize Variable	Digital Alarm	Change-Of-State Alarm	High Limit Alarm	Low Limit Alarm	Runtime Limit (Hrs)	Broadcasted Point	"Direct Lon Communication"	Trended Value	Misc. Other	Network Variable Type	Notes
System Type: "SZVAV AIR HANDLING UNIT FOR KITCHEN AND CAFETERIA"		Input/Output (Note 1) – Sensed				Calculated			Software/Firmware Features (Note 2,3) – Alarms and Advisories (with Instructions)					Miscellaneous Features					Notes
1	Outside Air Temp	X												X		X		nvo	
2	Outside Air Humidity	X												X		X		nvo	
3	Outside Air Enthalpy		X											X				nvo	
4	System Operating Status "A" mode			X						X						X		nvo	
5	Supply Airflow Setpoint		X															nvi/nvo	
6	Supply Airflow	X									20% over SP	20% under SP				X		nvo	
7	Exhaust Airflow Setpoint		X															nvi/nvo	
8	Exhaust Airflow	X									20% over SP	20% under SP						nvo	
9	Supply Pre-Filter Pressure Drop	X									per Mfr					X		nvo	
10	Exhaust/Return Pre-Filter Pressure Drop	X									per Mfr					X		nvo	
11	Supply Air Temp Heating Setpoint		X															nvi/nvo	
12	Exhaust/Return Air Temp	X														X		nvo	
13	Exhaust Air Temp Frost Control Setpoint		X															nvi/nvo	
14	Heating Coil Discharge Air Temp Setpoint		X															nvi/nvo	
15	Heating Coil Discharge Air Temp	X														X		nvo	
16	Heating Coil Hot Water Valve		X															nvo	
17	Cooling Coil Discharge Air Temp Setpoint		X								51°FDB							nvi/nvo	
18	Cooling Coil Discharge Air Temp	X														X		nvo	
19	Cooling Coil Chilled Water Valve		X															nvo	
20	Active Supply Air Temp Setpoint		X															nvi/nvo	
21	Supply Air Temp Minimum Setpoint		X															nvi/nvo	
22	Supply Air Temp Maximum Setpoint		X															nvi/nvo	
23	Supply Air Temp	X														X		nvo	
24	Kitchen Reheat Coil Valve		X															nvo	

= Contractor to provide quantity as required to include all instances of the indicated feature. Include multiple points within each mechanical system as necessary. Coordinate with equipment vendor.

Notes:

1. The points listed herein are the minimum points required for the control and monitoring of this equipment. This point list is typical for each mechanical/electrical system of this type. If the sequence of operation requires additional or differing information it must be provided by the respective provider of the controls for this type of equipment as coordinated by the General and Mechanical Contractors.
2. The TCC shall provide all digital alarm logic. All digital alarms shall be part of the LNS database.
3. For BMS/DDC projects, the FMS will provide all trending and analog alarming via the Wonderware Software.
4. Provide Lon communication connection to this device mapping all required points into the LNS database.
5. Provide Occupied and Unoccupied setpoints.
6. Provide accumulated air flow for validation of purge mode and for permanent validation of occupant ventilation.
7. Provide manual reset device. Note that this device both alarms to the BMS and is hardwired to the VFD's for shutdown of the fans in all operating conditions of the VFD.
8. Alarm at 60° FDB occupied heating, 45° FDB unoccupied heating, 85° FDB occupied cooling.
9. 80% RH Occupied cooling, 75° FDP unoccupied cooling.
10. NVO is network variable output. NVI is network variable input.

Reference No.	Point Name	Analog Input	Analog Output	Digital Input	Digital Output	String Value	Rate of Variable	Totalize Variable	Digital Alarm	Change-Of-State Alarm	High Limit Alarm	Low Limit Alarm	Runtime Limit (Hrs)	Broadcasted Point	"Direct Lon Communication"	Trended Value	Misc. Other	Network Variable Type	Notes
System Type: "SZVAV AIR HANDLING UNIT FOR KITCHEN AND CAFETERIA"		Input/Output (Note 1) – Sensed				Calculated			Software/Firmware Features (Note 2,3) – Alarms and Advisories (with Instructions)					Miscellaneous Features					Notes
25	Exhaust/Return Air Relative Humidity	X																nvo	
26	Exhaust/Return Air Temp	X														X		nvo	
27	Exhaust/Return Air Temp Setpoint		X															nvi/nvo	5
28	Exhaust/Return Air Dewpoint	X	X															nvo	
29	Exhaust/Return Air Enthalpy	X	X															nvo	
30	Exhaust/Return Air (Over Cooling) Temp Setpoint		X															nvi/nvo	
31	Outside Air Supply Damper		X															nvo	
32	Exhaust Air Damper				X													nvo	
33	Recirculation Air Damper		X															nvo	
34	Cafeteria Relative Humidity	X									Note 9					X		nvo	9
35	Cafeteria Room Temp	X									Note 8					X		nvo	8
36	Cafeteria Room Temp Unoccupied Cut-In Heating Setpoint			X														nvi/nvo	
37	Cafeteria Room Temp Unoccupied Cut-Out Heating Setpoint			X														nvi/nvo	
38	Cafeteria Room Temp Warm-In Cut-Out Setpoint			X														nvi/nvo	
39	Cafeteria Room Temp Warm-Up Cut-Out Setpoint			X														nvi/nvo	
40	Cafeteria Room Unoccupied Dewpoint Cut-In Setpoint		X															nvi/nvo	
41	Cafeteria Room Unoccupied Dewpoint Cut-Out Setpoint		X															nvi/nvo	
42	Cafeteria Room Calculated Enthalpy	X	X															nvo	
43	Cafeteria Room Calculated Dewpoint	X	X															nvo	
44	SF High Static Pressure			X						X	[TBD]							nvo	7
45	EF Low Suction Pressure			X						X		[TBD]						nvo	7
46	Supply Fan Status			X									1,000					nvo	
47	Supply Fan VFD														X			nvo	4
48	Supply Fan VFD S/S				X													nvo	
49	Supply Fan VFD Fault			X						X								nvo	

Reference No.	Point Name	Analog Input	Analog Output	Digital Input	Digital Output	String Value	Rate of Variable	Totalize Variable	Digital Alarm	Change-Of-State Alarm	High Limit Alarm	Low Limit Alarm	Runtime Limit (Hrs)	Broadcasted Point	"Direct Lon Communication"	Trended Value	Misc. Other	Network Variable Type	Notes
System Type: "SZVAV AIR HANDLING UNIT FOR KITCHEN AND CAFETERIA"		Input/Output (Note 1) – Sensed				Calculated			Software/Firmware Features (Note 2,3) – Alarms and Advisories (with Instructions)					Miscellaneous Features					Notes
50	Supply Fan VFD Speed	X																nvo	
51	Supply Fan Failure				X				X									nvo	2
52	Supply Fan VFD "A" Mode			X														nvo	
53	Supply Fan VFD Power KW,KWH													X	X			nvo	
54	Exhaust Fan Status			X									1,000					nvo	
55	Exhaust Fan VFD														X			nvo	4
56	Exhaust Fan VFD S/S				X													nvo	
57	Exhaust Fan VFD Fault			X						X								nvo	
58	Exhaust Fan VFD Speed	X																nvo	
59	Exhaust Fan Failure				X				X									nvo	2
60	Exhaust Fan VFD "A" Mode			X														nvo	
61	Exhaust Fan VFD Power KW,KWH													X	X			nvo	
62	Outside Air Flow	X					cfm	CCF			SP-20%	SP+20%				X		nvo	6
63	Outside Air Flow Setpoint		X															nvi/nvo	
64	Common Fire Alarm			X						X				X				nvo	
65	Freezestat Alarm			X						X		39°F						nvo	
66	HVAC Mode					X								X				nvo	
67	Occupancy Mode (Bypass Mode)			X														nvo	
68	Occupancy Mode					X												nvo	
69	General Kitchen Exhaust Fan S/S				X													nvo	
70	General Kitchen Exhaust Fan Status			X												X		nvo	
71	General Kitchen Exhaust Fan Failure				X				X									nvo	
72	Can Wash Exhaust Fan Status			X												X		nvo	
73	Staff Toilet Exhaust Fan S/S				X													nvo	
74	Staff Toilet Exhaust Fan Status			X														nvo	
75	Staff Toilet Exhaust Fan Failure				X				X									nvo	
76	Kitchen Hood Exhaust Fan Status			X												X		nvo	
77	Mixed Air Temp	X														X		nvo	
78	Outside Air CO_2	X														X		nvo	
79	Space CO_2	X														X		nvo	
80	Kitchen Space Temp	X														X		nvo	
81	Kitchen Reheat Coil Discharge Air Temp	X														X		nvo	
82	Kitchen Reheat Coil Valve		X															nvo	

President & CEO
Lorraine Grillo

Board of Trustees
Chancellor Richard A. Carranza, Chairman
Curtis A. Harris
Emily A. Youssouf

SCA School Construction Authority

Architecture & Engineering
E. Bruce Barrett, R.A. LEED A.P., Vice President
Elan R. Abneri, P.E., Senior Director, Design Consultant Management
Stanley Dahir, R.A., Director, Quality Control & Construction Support
Maria A. Gómez, P.E., LEED A.P., Senior Director, A&E In-House Design
George D. Roussey, P.E., LEED A.P., Director, Technical Standards
Stacey Spann-Thom, Director, Operations Support

ARCHITECT
di Domenico + Partners, LLP
37-43 Crescent Street, Long Island City, New York 11101 Tel 212.337.0400 Fax 212.337.3567

MEP ENGINEER
Lilker Associates Consulting Engineers, PC
1001 Avenue of the Americas, New York, New York 10018 Tel 212.695.1000 Fax 212.695.1299

STRUCTURAL ENGINEER
Ysrael a Seinuk, PC
228 East 45th Street, New York, New York 10017 Tel 212.687.2233

CIVIL ENGINEER
Langan
360 West 31st Street, 8th Floor, New York, New York 10001 Tel 212.479.5400

ELEVATOR CONSULTANT
AB Consulting
34 Scandia Road, Congers, New York 10920 Tel 845.268.0170

Preliminary
Not For Construction

NOTE: Drawing may be printed at reduced scale

IT IS A VIOLATION OF THE STATE EDUCATION LAW SECTION 7209 (2) FOR ANY PERSON TO ALTER AN ITEM IN ANY WAY UNLESS SUCH PERSON IS ACTING UNDER THE DIRECTION OF A LICENSED PROFESSIONAL ENGINEER, AND THE ENGINEER STAMPS SUCH CHANGES

No.	Date	Revision
3	09/21/2018	100% SUBMISSION
2	06/22/2018	60% SUBMISSION
1	04/13/2018	30% SUBMISSION

Key Plan:

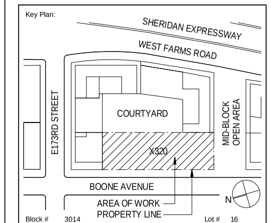

Block # 3014 Lot # 16

SCA Design Manager:	BERNARD FORTE
Project Architect/Engineer:	BRUCE LILKER, P.E.
Discipline Lead:	ANDRE FORTE
Designer:	ANDRE FORTE
Drawn by:	CHRISTOPHER ROZAN
Checked by:	SANTIAGO CABO, P.E.

LLW No.: 107404 Facility Code: X320 Date: 11/01/2018

Project:
PS 320X - BRONX
NEW SCHOOL

Address:
1570 BOONE AVENUE, BRONX, NY 10460

Drawing Title:
HVAC AUTOMATIC TEMPERATURE CONTROL DIAGRAM SHEET #3

Drawing No.: M408.00

Sheets in Contract Set: 359 OF 479

Sheets in DOB Set: - OF 0

9/20/2018 3:20:36 PM

NOTES:

1. DUCT SMOKE DETECTORS SHALL BE PROVIDED IN MAIN SUPPLY DUCT AND RETURN DUCT FOR SYSTEMS OVER 2,000 CFM AND ALSO UPSTREAM OF EACH STORY RETURN DUCT RISER CONNECTION WHERE RETURN AIR RISERS SERVE TWO OR MORE STORIES FOR SYSTEMS OVER 15,000 CFM.
2. SMOKE DAMPERS SHALL BE PROVIDED IN MAIN SUPPLY AND RETURN DUCT FOR SYSTEMS OVER 15,000 CFM.
3. INTEGRATE AIR FLOW MEASURING APPARATUS INTO THE BMS/DDC NETWORK.
4. EXHAUST FAN VFD SHALL HAVE SCHEDULED START/STOP COMMAND.
5. PROVIDE VARIABLE FREQUENCY DRIVE SUPPLY AND EXHAUST FANS.
6. SAFETY SHUTDOWN DEVICES SHALL BE HARDWIRED TO THE FAN STARTER CIRCUIT IN ADDITION TO THE DDC SYSTEM. COORDINATE WITH VFD VENDOR FOR SHUTDOWN UNDER ALL MODES OF OPERATION.
7. DIVISION 16 FIRE ALARM CONTRACTOR SHALL FURNISH FIRE ALARM SYSTEM COMPLIANT SMOKE DETECTORS TO THE MECHANICAL CONTRACTOR WHO SHALL IN TURN FURNISH THEM TO THE AIR HANDLING UNIT MANUFACTURER FOR FACTORY INSTALLATION OR TO THE SHEET METAL CONTRACTOR FOR FIELD DUCTWORK INSTALLATION. DIVISION 16 CONTRACTOR SHALL PROVIDE ALL SIGNAL AND CONTROL POWER WIRING.
8. PROVIDED BY OEM. WIRED AND INSTALLED BY TCC.

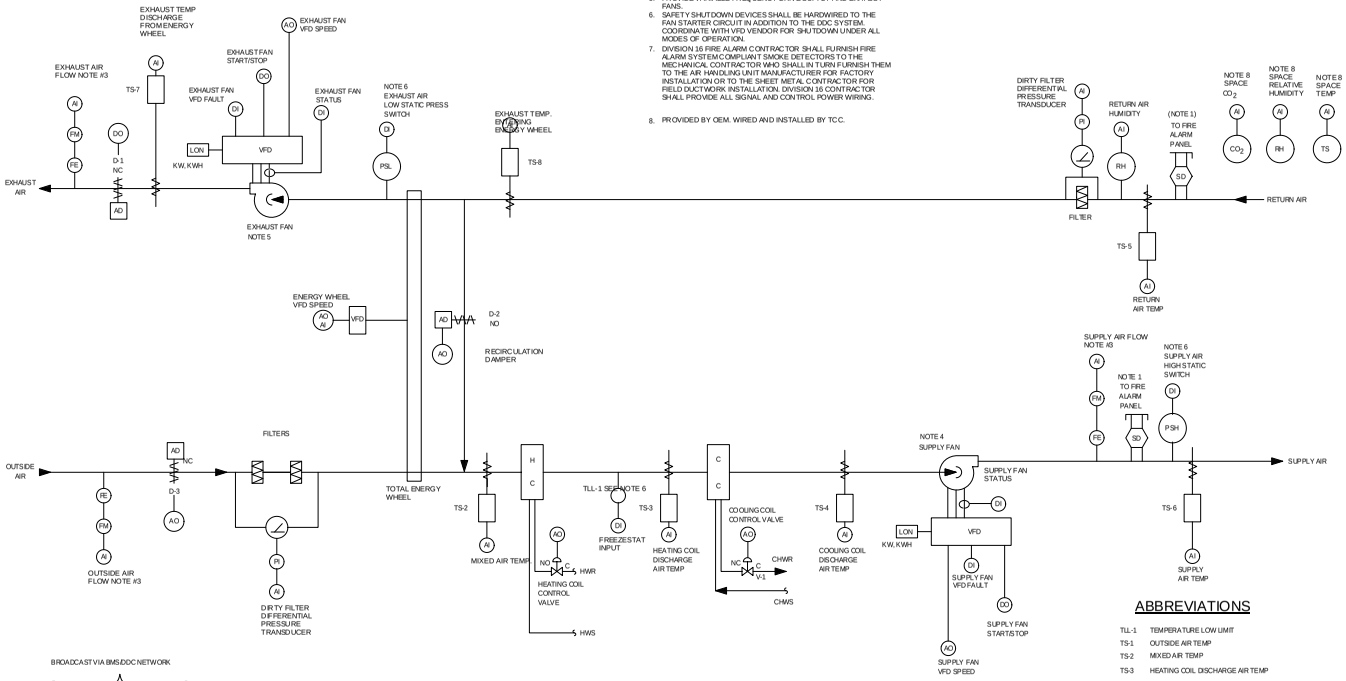

BROADCAST VIA BMS/DDC NETWORK

OUTSIDE AIR RH — OUTSIDE CO_2 — TS-1 OUTSIDE AIR TEMPERATURE

FIRE ALARM SYSTEM FAN SHUTDOWN NOTIFICATION ALARM FROM FIRE ALARM CONTROL PANEL

TYPICAL SYSTEM CONTROL DIAGRAM
SINGLE ZONE VARIABLE AIR VOLUME AIR HANDLER
GYMATORIUM
AHU-4

ABBREVIATIONS

TLL-1	TEMPERATURE LOW LIMIT
TS-1	OUTSIDE AIR TEMP
TS-2	MIXED AIR TEMP
TS-3	HEATING COIL DISCHARGE AIR TEMP
TS-4	COOLING COIL DISCHARGE AIR TEMP
TS-5	EXHAUST AIR TEMP
TS-6	SUPPLY AIR TEMP
TS-7	EXHAUST TEMP DISCHARGE FROM ENERGY WHEEL
TS-8	EXHAUST TEMP. ENTERING ENERGY WHEEL
FE	FLOW ELEMENT
FM	FLOWMETER
DI	DIGITAL INPUT
DO	DIGITAL OUTPUT
AI	ANALOG INPUT
AO	ANALOG OUTPUT
LON	LONWORKS NETWORK CONNECTION
PSL	PRESSURE SWITCH LOW
PSH	PRESSURE SWITCH HIGH
AD	DPR ACTUATORS
RH	RELATIVE HUMIDITY

President & CEO
Lorraine Grillo

Board of Trustees
Chancellor Richard A. Carranza, Chairman
Curtis A. Harris
Emily A. Youssouf

SCA
NYC School Construction Authority

Architecture & Engineering
E. Bruce Barrett, R.A. LEED A.P., Vice President
Elan R. Abines, P.E., Senior Director, Design Consultant Management
Stanley Dahr, R.A., Director, Quality Control & Construction Support
Maria A. Gómez, P.E., LEED A.P., Senior Director, A&E In-House Design
George D. Roussey, P.E., LEED A.P., Director, Technical Standards
Stacey Spann-Thom, Director, Operations Support

ARCHITECT
di Domenico + Partners, LLP
37-43 Crescent Street, Long Island City, New York 11101 Tel 212.337.0400 Fax 212.397.3987

MEP ENGINEER
Lilker Associates Consulting Engineers, PC
1001 Avenue of the Americas, New York, New York 10018 Tel 212.695.1000 Fax 212.695.1299

STRUCTURAL ENGINEER
Ysrael a Seinuk, PC
220 East 45th Street, New York, New York 10017 Tel 212.687.2233

CIVIL ENGINEER
Langan
360 West 31st Street, 8th Floor, New York, New York 10001 Tel 212.479.5400

ELEVATOR CONSULTANT
AB Consulting
34 Scandia Road, Congers, New York 10920 Tel 845.268.0170

Preliminary
Not For Construction

NOTE: Drawing may be printed at reduced scale

IT IS A VIOLATION OF THE STATE EDUCATION LAW SECTION 7209 (2) FOR ANY PERSON TO ALTER AN ITEM IN ANY WAY UNLESS SUCH PERSON IS ACTING UNDER THE DIRECTION OF A LICENSED PROFESSIONAL ENGINEER, AND THE ENGINEER STAMPS SUCH CHANGES

No.	Date	Revision
3	09/21/2018	100% SUBMISSION
2	06/22/2018	60% SUBMISSION
1	04/13/2018	30% SUBMISSION

Key Plan:

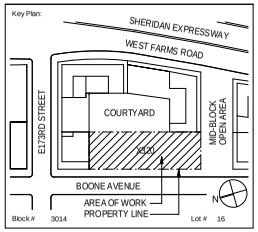

Block # 3014 Lot # 16

SCA Design Manager:	BERNARD FORTE
Project Architect/Engineer:	BRUCE LILKER, P.E.
Discipline Lead:	ANDRE FORTE
Designer:	ANDRE FORTE
Drawn by:	CHRISTOPHER ROZAN
Checked by:	SANTIAGO CABO, P.E.

LLW No.:	Facility Code:	Date:
107404	X320	11/01/2018

Project:
PS 320X - BRONX
NEW SCHOOL

Address:
1570 BOONE AVENUE, BRONX, NY 10460

Drawing Title:
HVAC AUTOMATIC TEMPERATURE CONTROL DIAGRAM SHEET #4

Drawing No.:
M409.00

Sheets in Contract Set:
360 OF 479

Sheets in DOB Set:
- OF 0

9/20/2018 3:20:58 PM

System Type: AHU-4		Input/Output (Note 1)							Software/Firmware Features (Note 2,3)									Notes
"VARIABLE VOLUME SINGLE ZONE AIR HANDLING UNIT WITH ENERGY WHEEL"		Sensed			Calculated				Alarms and Advisories (with Instructions)				Miscellaneous Features					
Reference No.	Point Name	Analog Input	Analog Output	Digital Input	Digital Output	String Value	Rate of Variable	Totalize Variable	Digital Alarm	Change-Of-State Alarm	High Limit Alarm	Low Limit Alarm	Runtime Limit (Hrs)	Broadcasted Point	"Direct Lon Communication"	Trended Value	Misc. Other	Network Variable Type	Notes
1	Outside Air Temp	X												X		X		nvo	
2	Outside Air Humidity	X												X		X		nvo	
3	Outside Air Enthalpy		X											X				nvo	
4	Outside Air CO2	X												X		X		nvo	
5	System Operating Status "A" mode			X					X							X		nvo	
6	Supply Airflow Setpoint		X															nvi/nvo	
7	Supply Airflow	X									20% over SP	20% under SP				X		nvo	
8	Exhaust/Return Airflow Setpoint		X															nvi/nvo	
9	Exhaust/Return Airflow	X									20% over SP	20% under SP						nvo	
10	Supply Pre-Filter Pressure Drop	X									per Mfr					X		nvo	
11	Exhaust/Return Pre-Filter Pressure Drop	X									per Mfr					X		nvo	
12	Supply Air Energy Wheel Discharge Temp	X														X		nvo	
13	Supply Air Temp Heating Setpoint (Leaving The Energy Wheel)		X															nvi/nvo	
14	Exhaust/Return Air Temp (Entering The Energy Wheel)	X														X		nvo	
15	Energy Wheel Rotation Sensor	X																nvo	
16	Energy Wheel VFD Speed		X															nvo	
17	Exhaust/Return Air Temp (Leaving The Energy Wheel)	X																nvo	
18	Exhaust/Return Air Temp Frost Control Setpoint		X															nvi/nvo	
19	Heating Coil Discharge Air Temp Setpoint		X															nvi/nvo	
20	Heating Coil Discharge Air Temp	X														X		nvo	
21	Heating Coil Hot Water Valve		X															nvo	
22	Cooling Coil Discharge Air Temp Setpoint		X								51°FDB							nvi/nvo	
23	Cooling Coil Discharge Air Temp	X														X		nvo	
24	Cooling Coil Chilled Water Valve		X															nvo	
25	Supply Air Temp Active Setpoint		X															nvi/nvo	
26	Supply Air Temp Minimum Setpoint		X															nvi/nvo	

X = Contractor to provide quantity as required to include all instances of the indicated feature. Include multiple points within each mechanical system as necessary. Coordinate with equipment vendor.

Notes:

1. The points listed herein are the minimum points required for the control and monitoring of this equipment. This point list is typical for each mechanical/electrical system of this type. If the sequence of operation requires additional or differing information, it must be provided by the respective provider of the controls for this type of equipment as coordinated by the General and Mechanical Contractors.
2. The TCC shall provide all digital alarm logic. All digital alarms shall be part of the LNS database.
3. For BMS/DDC projects, the EMSI will provide all trending and analog alarming via the Wonderware Software.
4. Provide Lon communication connection to this device mapping all required points into the LNS database.
5. Provide Occupied and Unoccupied setpoints.
6. Provide accumulated air flow for validation of purge-mode and for permanent validation of occupant ventilation
7. Provide manual reset device. Note that this device both alarms in the BMS and is hardwired to the VFD's for shutdown of the fans in all operating conditions of the VFD.
8. Alarm at 90° FDB occupied heating, 45° FDB unoccupied heating, 85° FDB occupied cooling.
9. 55% RH Occupied cooling, 75° FDP unoccupied cooling.
10. NVO is network variable output. NVI is network variable input.
11. Provide an alarm when at the calculated differential between outside air and space air CO2 value is 1000ppm.

System Type: AHU-4		Input/Output (Note 1)							Software/Firmware Features (Note 2,3)									Notes
"VARIABLE VOLUME SINGLE ZONE AIR HANDLING UNIT WITH ENERGY WHEEL"		Sensed			Calculated				Alarms and Advisories (with Instructions)				Miscellaneous Features					
Reference No.	Point Name	Analog Input	Analog Output	Digital Input	Digital Output	String Value	Rate of Variable	Totalize Variable	Digital Alarm	Change-Of-State Alarm	High Limit Alarm	Low Limit Alarm	Runtime Limit (Hrs)	Broadcasted Point	"Direct Lon Communication"	Trended Value	Misc. Other	Network Variable Type	Notes
27	Supply Air Temp Maximum Setpoint		X															nvi/nvo	
28	Supply Air Temp	X														X		nvo	
29	Exhaust/Return Air Relative Humidity	X																nvo	
30	Exhaust/Return Air Temp	X														X		nvo	
31	Exhaust/Return Air Temp Setpoint		X															nvi/nvo	5
32	Exhaust/Return Air Dewpoint	X	X															nvo	
33	Exhaust/Return Air Enthalpy	X	X															nvo	
34	Exhaust/Return Air (Over Cooling) Temp Setpoint		X															nvi/nvo	
35	Outside Air Supply Damper		X															nvo	
36	Exhaust/Return Air Damper				X													nvo	
37	Recirculation Air Damper		X															nvo	
38	Room Space Relative Humidity	X									Note 9					X		nvo	
39	Room Temp	X									Note 8					X		nvo	
40	Room Unoccupied Dewpoint Cut-In Setpoint		X															nvi/nvo	
41	Room Unoccupied Dewpoint Cut-Out Setpoint		X															nvi/nvo	
42	Room Calculated Enthalpy	X	X															nvo	
43	Room Calculated Dewpoint	X	X															nvo	
44	Room CO2	X																nvo	
45	Differential CO2 (Calculated)					X					1000 ppm							nvo	11
46	SF High Static Pressure			X						X	[TBD]							nvo	7

System Type: AHU-4		Input/Output (Note 1)							Software/Firmware Features (Note 2,3)									Notes
"VARIABLE VOLUME SINGLE ZONE AIR HANDLING UNIT WITH ENERGY WHEEL"		Sensed			Calculated				Alarms and Advisories (with Instructions)				Miscellaneous Features					
Reference No.	Point Name	Analog Input	Analog Output	Digital Input	Digital Output	String Value	Rate of Variable	Totalize Variable	Digital Alarm	Change-Of-State Alarm	High Limit Alarm	Low Limit Alarm	Runtime Limit (Hrs)	Broadcasted Point	"Direct Lon Communication"	Trended Value	Misc. Other	Network Variable Type	Notes
47	EF/RF Low Suction Pressure			X						X		[TBD]						nvo	7
48	Supply Fan Status			X									1,000					nvo	
49	Supply Fan VFD														X			nvo	4
50	Supply Fan VFD S/S				X													nvo	
51	Supply Fan VFD Fault			X						X								nvo	
52	Supply Fan VFD Speed		X															nvo	
53	Supply Fan Failure				X				X									nvo	2
54	Supply Fan VFD "A" Mode			X														nvo	
55	Supply Fan VFD Power KW,KWH													X	X			nvo	
56	Exhaust Fan Status			X									1,000					nvo	
57	Exhaust Fan VFD														X			nvo	4
58	Exhaust Fan VFD S/S				X													nvo	
59	Exhaust Fan VFD Fault			X						X								nvo	
60	Exhaust Fan VFD Speed		X															nvo	
61	Exhaust Fan Failure				X				X									nvo	2
62	Exhaust Fan VFD "A" Mode			X														nvo	
63	Exhaust Fan VFD Power KW,KWH													X	X			nvo	
64	Outside Air Flow	X					cfm	CCF			SP-20%	SP+20%				X		nvo	6
65	Outside Air Flow Setpoint		X															nvi/nvo	
66	Common Fire Alarm			X						X				X				nvo	
67	Freezestat Alarm			X						X		39°F						nvo	
68	HVAC Mode					X								X				nvo	
69	Occupancy Mode (Bypass Mode)			X														nvo	
70	Occupancy Mode					X												nvo	

President & CEO
Lorraine Grillo

Board of Trustees
Chancellor Richard A. Carranza, Chairman
Curtis A. Harris
Emily A. Youssouf

SCA

Architecture & Engineering
E. Bruce Barnett, R.A. LEED A.P., Vice President
Elan R. Ahmet, P.E., Senior Director, Design Consultant Management
Stanley Dahir, R.A., Director, Quality Control & Construction Support
Maria A. Gomez, P.E., LEED A.P., Senior Director, A&E In-House Design
George D. Roussey, P.E., LEED A.P., Director, Technical Standards
Stacey Spann-Thom, Director, Operations Support

ARCHITECT
di Domenico + Partners, LLP
37-48 Crescent Street, Long Island City, New York 11101 Tel 212.337.0600 Fax 212.337.3567

MEP ENGINEER
Lilker Associates Consulting Engineers, PC
1001 Avenue of the Americas, New York, New York 10018 Tel 212.695.1000 Fax 212.695.1299

STRUCTURAL ENGINEER
Ysrael a Seinuk, PC
228 East 45th Street, New York, New York 10017 Tel 212.687.2233

CIVIL ENGINEER
Langan
360 West 31st Street, 8th Floor, New York, New York 10001 Tel 212.479.5400

ELEVATOR CONSULTANT
AB Consulting
34 Scandia Road, Congers, New York 10920 Tel 845.268.0170

Preliminary
Not For Construction

NOTE: Drawing may be printed at reduced scale

IT IS A VIOLATION OF THE STATE EDUCATION LAW SECTION 7209 (2) FOR ANY PERSON TO ALTER AN ITEM IN ANY WAY UNLESS SUCH PERSON IS ACTING UNDER THE DIRECTION OF A LICENSED PROFESSIONAL ENGINEER, AND THE ENGINEER STAMPS SUCH CHANGES

No.	Date	Revision
3	09/21/2018	100% SUBMISSION
2	06/22/2018	60% SUBMISSION
1	04/13/2018	30% SUBMISSION

Key Plan:

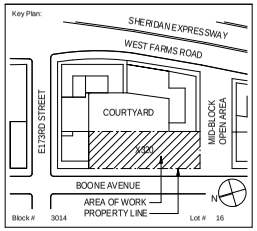

SCA Design Manager:	BERNARD FORTE
Project Architect/Engineer:	BRUCE LILKER, P.E.
Discipline Lead:	ANDRE FORTE
Designer:	ANDRE FORTE
Drawn by:	CHRISTOPHER ROZAN
Checked by:	SANTIAGO CABO, P.E.

LLW No.:	Facility Code:	Date:
107404	X320	11/01/2018

Project:
PS 320X - BRONX
NEW SCHOOL

Address:
1570 BOONE AVENUE, BRONX, NY 10460

Drawing Title:
HVAC AUTOMATIC TEMPERATURE CONTROL DIAGRAM SHEET #5

Drawing No.:
M410.00

Sheets in Contract Set:
361 OF 479

Sheets in DOB Set:
- OF 0

9/20/2018 3:20:36 PM

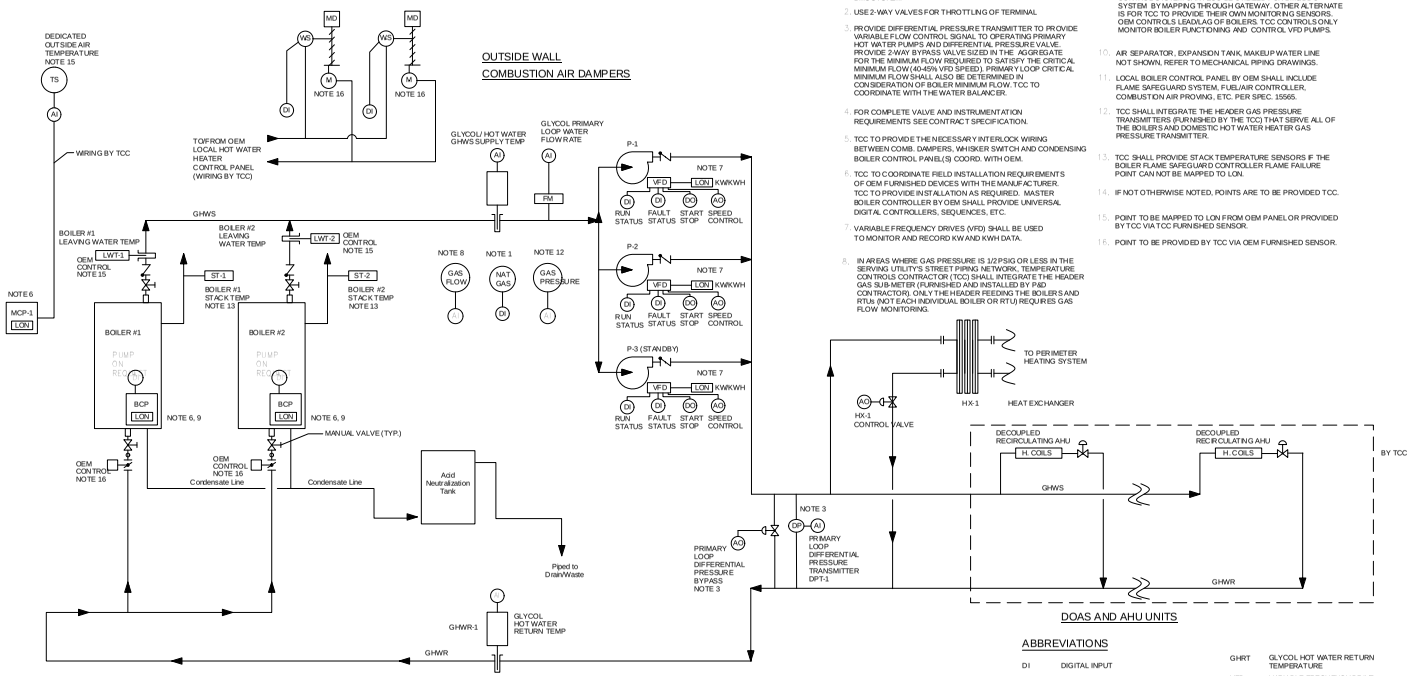

GLYCOL HOT WATER BOILER PLANT

SYSTEM CONTROL DIAGRAM
GLYCOL HOT WATER CONDENSING BOILER
PRIMARY LOOP

DOAS AND AHU UNITS

PRIMARY LOOP NOTES:

1. NATURAL GAS SENSORS IN MECHANICAL EQUIPMENT ROOM ARE PROVIDED BY THE MECHANICAL CONTRACTOR. INTEGRATE GAS ALARM PANEL ANNUNCIATION WITH THE BMS SYSTEM.
2. USE 2-WAY VALVES FOR THROTTLING OF TERMINAL
3. PROVIDE DIFFERENTIAL PRESSURE TRANSMITTER TO PROVIDE VARIABLE FLOW CONTROL SIGNAL TO OPERATING PRIMARY HOT WATER PUMPS AND DIFFERENTIAL PRESSURE VALVE. PROVIDE 2-WAY BYPASS VALVE SIZED IN THE AGGREGATE FOR THE MINIMUM FLOW REQUIRED TO SATISFY THE CRITICAL MINIMUM FLOW (40-45% VFD SPEED). PRIMARY LOOP CRITICAL MINIMUM FLOW SHALL ALSO BE DETERMINED IN CONSIDERATION OF BOILER MINIMUM FLOW. TCC TO COORDINATE WITH THE WATER BALANCER.
4. FOR COMPLETE VALVE AND INSTRUMENTATION REQUIREMENTS SEE CONTRACT SPECIFICATION.
5. TCC TO PROVIDE THE NECESSARY INTERLOCK WIRING BETWEEN COMB. DAMPERS, WHISKER SWITCH AND CONDENSING BOILER CONTROL PANEL(S) COORD. WITH OEM.
6. TCC TO COORDINATE FIELD INSTALLATION REQUIREMENTS OF OEM FURNISHED DEVICES WITH THE MANUFACTURER. TCC TO PROVIDE INSTALLATION AS REQUIRED. MASTER BOILER CONTROLLER BY OEM SHALL PROVIDE UNIVERSAL DIGITAL CONTROLLERS, SEQUENCES, ETC.
7. VARIABLE FREQUENCY DRIVES (VFD) SHALL BE USED TO MONITOR AND RECORD KW AND KWH DATA.
8. IN AREAS WHERE GAS PRESSURE IS 1/2 PSIG OR LESS IN THE SERVING UTILITY'S STREET PIPING NETWORK, TEMPERATURE CONTROLS CONTRACTOR (TCC) SHALL INTEGRATE THE HEADER GAS SUB-METER (FURNISHED AND INSTALLED BY PAD CONTRACTOR). ONLY THE HEADER FEEDING THE BOILERS AND RTUs (NOT EACH INDIVIDUAL BOILER OR RTU) REQUIRES GAS FLOW MONITORING.
9. OEM SHALL PROVIDE FLAME SAFEGUARD CONTROLS, FUEL/AIR RATIO CONTROLLER, UNIVERSAL DIGITAL CONTROLLERS (I.E. HOT WATER SUPPLY TEMP RESET). SENSORS UTILIZED BY OEM CONTROL SYSTEM CAN ALSO BE UTILIZED FOR BMS/DDC SYSTEM BY MAPPING THROUGH GATEWAY. OTHER ALTERNATE IS FOR TCC TO PROVIDE THEIR OWN MONITORING SENSORS. OEM CONTROLS LEAD/LAG OF BOILERS. TCC CONTROLS ONLY MONITOR BOILER FUNCTIONING AND CONTROL VFD PUMPS.
10. AIR SEPARATOR, EXPANSION TANK, MAKEUP WATER LINE NOT SHOWN, REFER TO MECHANICAL PIPING DRAWINGS.
11. LOCAL BOILER CONTROL PANEL BY OEM SHALL INCLUDE FLAME SAFEGUARD SYSTEM, FUEL/AIR CONTROLLER, COMBUSTION AIR PROVING, ETC. PER SPEC. 15565.
12. TCC SHALL INTEGRATE THE HEADER GAS PRESSURE TRANSMITTERS (FURNISHED BY THE TCC) THAT SERVE ALL OF THE BOILERS AND DOMESTIC HOT WATER HEATER GAS PRESSURE TRANSMITTER.
13. TCC SHALL PROVIDE STACK TEMPERATURE SENSORS IF THE BOILER FLAME SAFEGUARD CONTROLLER FLAME FAILURE POINT CAN NOT BE MAPPED TO LON.
14. IF NOT OTHERWISE NOTED, POINTS ARE TO BE PROVIDED TCC.
15. POINT TO BE MAPPED TO LON FROM OEM PANEL OR PROVIDED BY TCC VIA TCC FURNISHED SENSOR.
16. POINT TO BE PROVIDED BY TCC VIA OEM FURNISHED SENSOR.

ABBREVIATIONS

DI	DIGITAL INPUT
DO	DIGITAL OUTPUT
AI	ANALOG INPUT
AO	ANALOG OUTPUT
DP	DIFFERENTIAL PRESSURE TRANSMITTER
EWT	ENTERING HOT WATER TEMPERATURE
FTR	FINNED TUBE RADIATION
FM	FLOW METER
GHWP	GLYCOL HOT WATER PUMP
HWP	HOT WATER PUMP
LWT	LEAVING HOT WATER TEMPERATURE
GHST	GLYCOL HOT WATER SUPPLY TEMPERATURE
GHRT	GLYCOL HOT WATER RETURN TEMPERATURE
VFD	VARIABLE FREQUENCY DRIVE
TS	TEMPERATURE SENSOR
WS	WHISKER SWITCH
ST	STACK TEMPERATURE SENSOR
HWR	HOT WATER RETURN
HWS	HOT WATER SUPPLY
GHWR	GLYCOL HOT WATER RETURN
GHWS	GLYCOL HOT WATER SUPPLY
MCP	MASTER CONTROL PANEL
BCP	BOILER CONTROL PANEL
HX	HEAT EXCHANGER

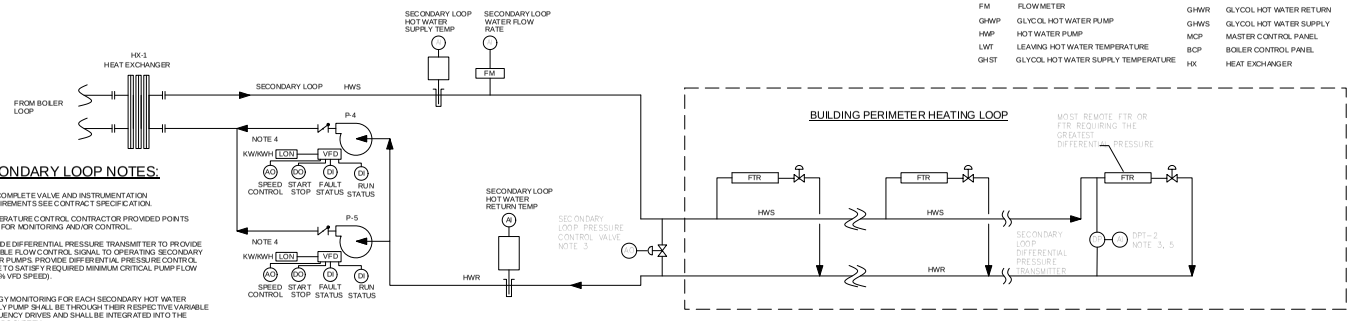

SECONDARY LOOP NOTES:

1. FOR COMPLETE VALVE AND INSTRUMENTATION REQUIREMENTS SEE CONTRACT SPECIFICATION.
2. TEMPERATURE CONTROL CONTRACTOR PROVIDED POINTS USED FOR MONITORING AND/OR CONTROL.
3. PROVIDE DIFFERENTIAL PRESSURE TRANSMITTER TO PROVIDE VARIABLE FLOW CONTROL SIGNAL TO OPERATING SECONDARY WATER PUMPS. PROVIDE DIFFERENTIAL PRESSURE CONTROL VALVE TO SATISFY REQUIRED MINIMUM CRITICAL PUMP FLOW (40-45% VFD SPEED).
4. ENERGY MONITORING FOR EACH SECONDARY HOT WATER SUPPLY PUMP SHALL BE THROUGH THEIR RESPECTIVE VARIABLE FREQUENCY DRIVES AND SHALL BE INTEGRATED INTO THE BMS/DDC SYSTEM.
5. DIFFERENTIAL PRESSURE SHALL BE MEASURED AT OR NEAR THE MOST REMOTE FTR OR THE FTR REQUIRING THE GREATEST DIFFERENTIAL PRESSURE. REFER TO DRAWING M201.00.

SYSTEM CONTROL DIAGRAM
HOT WATER SECONDARY LOOP PIPING

President & CEO
Lorraine Grillo

Board of Trustees
Chancellor Richard A. Carranza, Chairman
Curtis A. Harris
Emily A. Youssouf

SCA

Architecture & Engineering
E. Bruce Barnett, R.A. LEED A.P., Vice President
Elan R. Ahmet, P.E., Senior Director, Design Consultant Management
Stanley Dahir, R.A., Director, Quality Control & Construction Support
Marila A. Gomez, P.E., LEED A.P., Senior Director, A&E In-House Design
George D. Roussey, P.E., LEED A.P., Director, Technical Standards
Stacey Spann-Thorn, Director, Operations Support

ARCHITECT
di Domenico + Partners, LLP
3743 Crescent Street, Long Island City, New York 11101 Tel 212.337.0400 Fax 212.337.3597

MEP ENGINEER
Lilker Associates Consulting Engineers, PC
1101 Avenue of the Americas, New York, New York 10036 Tel 212.695.1200 Fax 212.695.1299

STRUCTURAL ENGINEER
Ysrael a Seinuk, PC
225 East 45th Street, New York, New York 10017 Tel 212.687.2233

CIVIL ENGINEER
Langan
360 West 31st Street, 8th Floor, New York, New York 10001 Tel 212.479.5400

ELEVATOR CONSULTANT
AB Consulting
34 Scranton Road, Congers, New York 10920 Tel 845.268.0130

Preliminary
Not For Construction

NOTE: Drawing may be printed at reduced scale

IT IS A VIOLATION OF THE STATE EDUCATION LAW SECTION 7209 (2) FOR ANY PERSON TO ALTER AN ITEM IN ANY WAY UNLESS SUCH PERSON IS ACTING UNDER THE DIRECTION OF A LICENSED PROFESSIONAL ENGINEER, AND THE ENGINEER STAMPS SUCH CHANGES

No.	Date	Revision
3	09/21/2018	100% SUBMISSION
2	06/22/2018	60% SUBMISSION
1	04/13/2018	30% SUBMISSION

Key Plan:

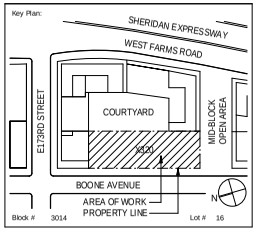

SCA Design Manager:	BERNARD FORTE
Project Architect/Engineer:	BRUCE LILKER, P.E.
Discipline Lead:	ANDRE FORTE
Designer:	ANDRE FORTE
Drawn by:	CHRISTOPHER ROZAN
Checked by:	SANTIAGO CABO, P.E.

LLW No.:	Facility Code:	Date:
107404	X320	11/01/2018

Project:
PS 320X - BRONX
NEW SCHOOL

Address:
1570 BOONE AVENUE, BRONX, NY 10460

Drawing Title:
HVAC AUTOMATIC TEMPERATURE CONTROL DIAGRAM SHEET #6

Drawing No.:
M411.00

Sheets in Contract Set:
362 OF 479

Sheets in DOB Set:
- OF 0

9/20/2018 3:20:37 PM

System Type: B1 AND B2		Input/Output (Note 1)							Software/Firmware Features (Note 2,3)									Notes
"TYPICAL PRIMARY/SECONDARY HOT WATER CONDENSING BOILER PLANT"		Sensed				Calculated			Alarms and Advisories (with instructions)					Miscellaneous Features				
Reference No.	Point Name	Analog Input	Analog Output	Digital Input	Digital Output	Step Value	Rate of Variable	Totalize Variable	Digital Alarm	Change-Of-State Alarm	High Limit Alarm	Low Limit Alarm	Runtime Limit (Hrs)	Broadcasted Point	"Direct Lon Communication"	Trended Value	Misc. Other	Network Variable Type	Notes
1	Outside Air Temp (By OEM)	X																	
2	GHW Differential Water Pressure	X									SP+10%	SP-10%				X		nvo	
3	Common Header GHWS Temp	X														X		nvo	6
4	Common Header GHWR Temp	X									131° F	SP-5°F				X		nvo	6
5	Common Header HW Flow	X				BPM	Gal.									X		nvo	
6	Each Boiler Supply Temp (By OEM)	X														X		nvo	
7	Each Boiler Isolation Valve			X														nvo	
8	Each Stack Temp	X														X		nvo	8
9	Each Combustion Damper Status			X														nvo	
10	Natural Gas Alarm			X						X								nvo	5
11	Glycol Hot Water Pump Enable			X														nvo	
12	GHW Pump VFD			X											X			nvo	4
13	GHW Pump VFD S/S				X													nvo	9
14	GHW Pump VFD Status			X														nvo	9
15	GHW Pump VFD Speed		X															nvo	9
16	GHW Pump VFD Fault			X														nvo	9
17	GHW Pump VFD Power KW/KWH													X	X			nvo	9
18	GHW Pump Failure				X				X									nvo	2,9
19	HW Pump VFD			X											X			nvo	4
20	HW Pump VFD S/S				X													nvo	9

System Type: B1 AND B2		Input/Output (Note 1)							Software/Firmware Features (Note 2,3)									Notes
"TYPICAL PRIMARY/SECONDARY HOT WATER CONDENSING BOILER PLANT"		Sensed				Calculated			Alarms and Advisories (with instructions)					Miscellaneous Features				
Reference No.	Point Name	Analog Input	Analog Output	Digital Input	Digital Output	Step Value	Rate of Variable	Totalize Variable	Digital Alarm	Change-Of-State Alarm	High Limit Alarm	Low Limit Alarm	Runtime Limit (Hrs)	Broadcasted Point	"Direct Lon Communication"	Trended Value	Misc. Other	Network Variable Type	Notes
21	HW Pump VFD Status			X														nvo	9
22	HW Pump VFD Speed		X															nvo	9
23	HW Pump VFD Fault			X														nvo	9
24	HW Pump VFD Power KW/KWH													X	X			nvo	9
25	HW Pump Failure				X				X									nvo	2,9
26	Boiler Controller Including Flame Failure (By OEM)									X						X		nvo	
27	Master Boiler Controller			X												X		nvo	
28	Natural Gas Supply Pressure	X										4" w.c.				X		nvo	
29	Natural Gas Flow	X					cfh	CCF								X		nvo	
30	GHW Primary Loop Bypass Control Valve		X													X		nvo	
31	HW Secondary Loop Bypass Control Valve		X													X		nvo	
32	Primary Loop Mix-1 Control Valve		X													X		nvo	
33	Secondary HWS Temp	X																nvo	
34	Secondary HWR Temp	X																nvo	
35	Secondary Differential Water Pressure	X									SP+10%	SP-10%				X		nvo	
36	Secondary Header HW Flow	X					BPM	Gal.								X		nvo	
37	Primary Differential Water Pressure Setpoint		X													X		nvi/nvo	
38	Secondary Differential Water Pressure Setpoint		X													X		nvi/nvo	
39	Primary Loop Supply Temp Setpoint		X															nvi/nvo	
40	Secondary Loop Supply Temp Setpoint		X															nvi/nvo	
41	BOILER ENABLE				X													nvi/nvo	

X = Contractor to provide quantity as required to include all instances of the indicated feature. Include multiple points within each mechanical system as necessary. Coordinate with equipment vendor.

Notes

1. The points listed herein are the minimum points required for the control and monitoring of this equipment. This point list is typical for each mechanical/electrical system of this type. If the sequence of operation requires additional or differing information it must be provided by the respective provider of the controls for this type of equipment as coordinated by the General and Mechanical Contractors.
2. The TCC shall provide all digital alarm logic. All Digital alarms shall be part of the LNS database.
3. The FMS1 will provide all trending and analog alarming via the Wonderware Software.
4. Provide Lon communication connection to this device mapping all required points into the LNS database.
5. Alarm contacts are provided by Gas Monitoring and Leak Detection System. Coordinate BMS connections with Mechanical Contractor and vendor for details.
6. When using thermistor sensors use matched-pair elements to eliminate inter-sensor error factor.
7. NVO is network variable output. NVI is network variable input.
8. By TCC if no mapping of flame failure point.
9. Provide points for each pump.

President & CEO
Lorraine Grillo

Board of Trustees
Chancellor Richard A. Carranza, Chairman
Curtis A. Harris
Emily A. Youssouf

SCA
NEW YORK CITY
School Construction Authority

Architecture & Engineering
E. Bruce Barnett, R.A. LEED A.P., Vice President
Eran R. Almeri, P.E., Senior Director, Design Consultant Management
Stanley Dahir, R.A., Director, Quality Control & Construction Support
Maria A. Gomez, P.E., LEED A.P., Senior Director, A&E In-House Design
George D. Roussey, P.E., LEED A.P., Director, Technical Standards
Stacey Spann-Thorn, Director, Operations Support

ARCHITECT
di Domenico + Partners, LLP
37-43 Crescent Street, Long Island City, New York 11101 Tel 212.337.0400 Fax 212.337.3987

MEP ENGINEER
Lilker Associates Consulting Engineers, PC
1001 Avenue of the Americas, New York, New York 10018 Tel 212.695.1000 Fax 212.695.1299

STRUCTURAL ENGINEER
Ysrael a Seinuk, PC
228 East 45th Street, New York, New York 10017 Tel 212. 687.2233

CIVIL ENGINEER
Langan
360 West 31st Street, 8th Floor, New York, New York 10001 Tel 212.479.5600

ELEVATOR CONSULTANT
AB Consulting
34-Sconda Road, Congers, New York 10920 Tel 845.268.0170

Preliminary
Not For Construction

NOTE: Drawing may be printed at reduced scale

IT IS A VIOLATION OF THE STATE EDUCATION LAW SECTION 7209 (2) FOR ANY PERSON TO ALTER AN ITEM IN ANY WAY UNLESS SUCH PERSON IS ACTING UNDER THE DIRECTION OF A LICENSED PROFESSIONAL ENGINEER, AND THE ENGINEER STAMPS SUCH CHANGES

No.	Date	Revision
3	09/21/2018	100% SUBMISSION
2	06/22/2018	60% SUBMISSION
1	04/13/2018	30% SUBMISSION

Key Plan:

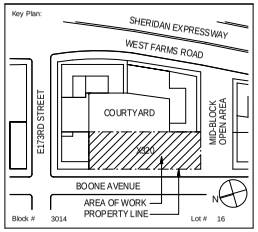

SCA Design Manager:	BERNARD FORTE
Project Architect/Engineer:	BRUCE LILKER, P.E.
Discipline Lead:	ANDRE FORTE
Designer:	ANDRE FORTE
Drawn by:	CHRISTOPHER ROZAN
Checked by:	SANTIAGO CABO, P.E.

LLW No:	Facility Code:	Date:
107404	X320	11/01/2018

Project:
PS 320X - BRONX
NEW SCHOOL

Address:
1570 BOONE AVENUE, BRONX, NY 10460

Drawing Title:
HVAC AUTOMATIC TEMPERATURE CONTROL DIAGRAM SHEET #7

Drawing No.:
M412.00

Sheets in Contract Set:
363 OF 479

Sheets in DOB Set:
- OF 0

9/20/2018 3:22:20:58 PM

ABBREVIATIONS

DI	DIGITAL INPUT
DO	DIGITAL OUTPUT
AI	ANALOG INPUT
AO	ANALOG OUTPUT
CHWS	CHILLED WATER SUPPLY
CHWR	CHILLED WATER RETURN
GCHWP	GLYCOL CHILLED WATER PUMP
CHWP	CHILLED WATER PUMP
DP	DIFFERENTIAL PRESSURE TRANSMITTER
FS	FLOW SWITCH
VFD	VARIABLE FREQUENCY DRIVE
TS	TEMPERATURE SENSOR
AHU	AIR HANDLING UNIT
HX	HEAT EXCHANGER
GCHWS	GLYCOL CHILLED WATER SUPPLY
GCHWR	GLYCOL CHILLED WATER RETURN

NOTES:

1. FOR COMPLETE VALVE AND INSTRUMENTATION REQUIREMENTS SEE CONTRACT SPECIFICATION.
2. USE MODULATING 2-WAY VALVES FOR THROTTLING OF AHU AND CHILLED BEAM TERMINAL UNITS.
3. PROVIDE A CHILLER DIFFERENTIAL PRESSURE TRANSMITTER TO PROVIDE VARIABLE FLOW CONTROL SIGNAL TO AUTOMATICALLY STARTED GLYCOL CHILLED WATER PUMP. PROVIDE SEPARATE SYSTEM DIFFERENTIAL PRESSURE TRANSMITTER(S) TO MODULATE SYSTEM BYPASS VALVE(S). PROVIDE MODULATING 2-WAY BYPASS VALVES SIZED IN THE AGGREGATE FOR THE FLOW REQUIRED TO SATISFY THE CRITICAL MINIMUM FLOW OF GLYCOL PUMP (40-45% VFD) AND FOR FLOW REQUIREMENT OF CHILLER AT TRANSIENT FULL LOAD WITH MINIMUM FLOW. TCC TO COORDINATE WITH CHILLER MANUFACTURER AND WATER BALANCER TO SET REQUIRED FLOW AND MINIMUM AMOUNT OF MODULAR CHILLER MODULES REQUIRED TO BE OPEN WHEN CHILLER IS IDLE TO ENSURE PRIMARY LOOP GLYCOL PUMP IS NEVER "DEAD HEADED".

   THE TEMPERATURE CONTROLS CONTRACTOR SHALL PROVIDE AND INTEGRATE A WATT METER FOR EACH FEEDER THAT SERVES THE CHILLER FOR KW AND KWH MONITORING.
4. ENERGY MONITORING (KW, KWH) FOR EACH PRIMARY LOOP PUMP SHALL BE THROUGH THEIR RESPECTIVE VARIABLE FREQUENCY DRIVES AND SHALL BE INTEGRATED INTO THE BMS/DDC SYSTEM.
5. LOCAL MODULAR MASTER CHILLER CONTROL PANEL SHALL STAGE ON AS REQUIRED THE INTERNAL MODULAR CHILLER MODULES TO SATISFY THE WATER TEMPERATURE SETPOINT. CHILLER MANUFACTURER SHALL ROTATE LEAD MODULE TO ENSURE EQUAL RUN TIME ON ALL MODULES. CHILLER MANUFACTURER SHALL CONFIGURE MASTER CHILLER CONTROL PANEL TO ALLOW CURRENT LEAD MODULE AND ANY OTHER MODULE NEEDED TO BE OPEN TO ALLOW SYSTEM FLOW, EVEN IF THE CHILLER IS IDLE. TCC SHALL WIRE AN OEM PROVIDED FLOW SWITCH TO CHILLER MASTER PANEL AS SAFETY INTERLOCK. TCC SHALL INTEGRATE CHILLER OEM MASTER PANEL VIA LON INTERFACE TO THE BMS/DDC SYSTEM. TCC SHALL PROVIDE ALL PRIMARY LOOP CONTROL AND MONITORING REQUIREMENTS AS PER THE POINTS LIST.
6. EACH MODULE SHALL BE PROVIDED WITH A MOTORIZED ISOLATION VALVE (NOT SHOWN) CONTROLLED BY OEM.
7. PROVIDE OEM SUPERVISORY MASTER CONTROLLER TO LEAD/LAG CONTROL MULTIPLE CHILLER BANKS.

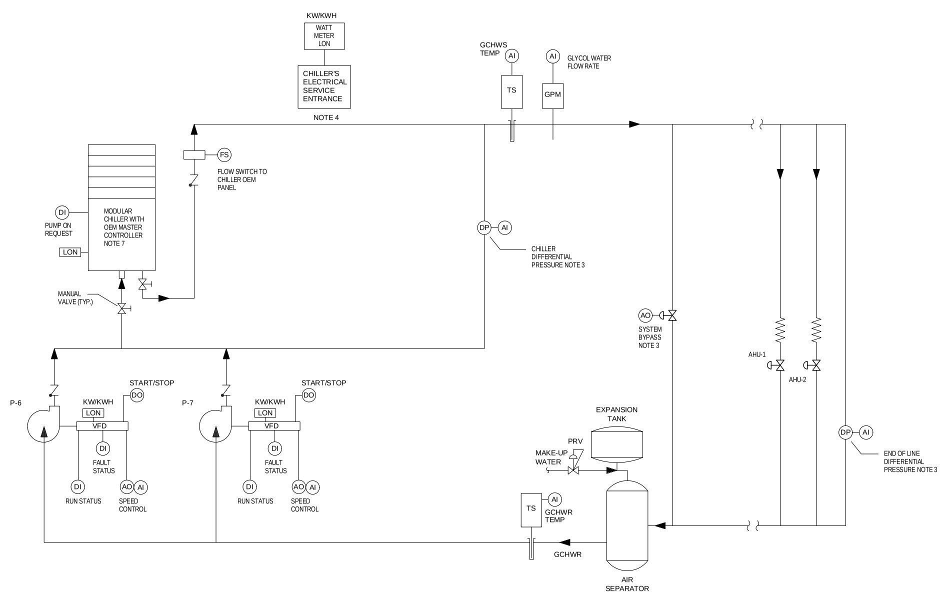

TYPICAL SYSTEM CONTROL DIAGRAM
VARIABLE FLOW CHILLED WATER PLANT

		INPUT/OUTPUT (NOTE 1)							SOFTWARE/FIRMWARE FEATURES (NOTE 2,3)										NOTES
"CHILLED WATER PLANT MONITORING"		SENSED				CALCULATED			ALARMS AND ADVISORIES (WITH INSTRUCTIONS)					MISCELLANEOUS FEATURES					
REFERENCE NO.	POINT NAME	ANALOG INPUT	ANALOG OUTPUT	DIGITAL INPUT	DIGITAL OUTPUT	STRING VALUE	RATE OF VARIABLE	TOTALIZE VARIABLE	DIGITAL ALARM	CHANGE-OF-STATE ALARM	HIGH LIMIT ALARM	LOW LIMIT ALARM	RUNTIME LIMIT (HRS)	BROADCASTED POINT	"DIRECT LON COMMUNICATION"	TRENDED VALUE	MISC. OTHER	NETWORK VARIABLE TYPE	NOTES
1	CHILLER DIFFERENTIAL PRESSURE	X									SP+10%	SP-10%				X		NVO	
2	DIFFERENTIAL WATER PRESSURE	X									SP+10%	SP-10%							
3											SP+10%	SP-10%				X		NVO	6
4											SP+10%	SP-10%				X		NVO	6
5	GCHW SUPPLY TEMP	X														X		NVO	
6	GCHW RETURN TEMP	X									SP+10°F	SP-10°F				X		NVO	
7	CHW SUPPLY TEMP	X														X		NVO	
8	CHW RETURN TEMP	X														X		NVO	
9																			
10																			
11																			
12																			
13																			
14																			
15																			
16	PRIMARY GCHW PUMP VFD			X											X			NVO	4
17	PRIMARY GCHW PUMP VFD S/S				X													NVO	8
18	PRIMARY GCHW PUMP VFD STATUS			X														NVO	8
19	PRIMARY GCHW PUMP VFD SPEED		X															NVO	8
20	PRIMARY GCHW PUMP VFD FAULT			X														NVO	8
21	PRIMARY GCHW PUMP VFD POWER KW,KWH													X	X			NVO	8
22	PRIMARY GCHW PUMP FAILURE			X					X									NVO	2,8
23	CHILLER CONTROLLER														X			NVO	4,5
24	EACH CHILLER	X					KW	KWH							X	X		NVO	4
25	PRIMARY WATER FLOW RATE	X					GPM									X		NVO	
26	CHILLER COMMON ALARM			X						X								NVO	
27	PRIMARY E.O.L DIFFERENTIAL PRESSURE VALVE		X													X		NVO	
28																X		NVO	
29																			
30	CHILLER DIFFERENTIAL PRESSURE SETPOINT		X													X		NVI/NVO	
31	PRIMARY GCHW DIFFERENTIAL PRESSURE SETPOINT		X													X		NVI/NVO	
32																X			
33																			
34																			
35	CHILLER ENABLE				X													NVI/NVO	

SYMBOL:
X = CONTRACTOR TO PROVIDE QUANTITY AS REQUIRED TO INCLUDE ALL INSTANCES OF THE INDICATED FEATURE. INCLUDE MULTIPLE POINTS WITHIN EACH MECHANICAL SYSTEM AS NECESSARY. COORDINATE WITH EQUIPMENT VENDOR.

NOTES:
1. THE POINTS LISTED HEREIN ARE THE MINIMUM POINTS REQUIRED FOR THE CONTROL AND MONITORING OF THIS EQUIPMENT. THIS POINT LIST IS TYPICAL FOR EACH MECHANICAL/ELECTRICAL SYSTEM OF THIS TYPE. IF THE SEQUENCE OF OPERATION REQUIRES ADDITIONAL OR DIFFERING INFORMATION IT MUST BE PROVIDED BY THE RESPECTIVE PROVIDER OF THE CONTROLS FOR THIS TYPE OF EQUIPMENT AS COORDINATED BY THE GENERAL AND MECHANICAL CONTRACTORS.
2. THE TCC SHALL PROVIDE ALL DIGITAL ALARM LOGIC. ALL DIGITAL ALARMS SHALL BE PART OF THE LNS DATABASE.
3. THE FMSI WILL PROVIDE ALL TRENDING AND ANALOG ALARMING VIA THE WONDERWARE SOFTWARE.
4. PROVIDE LON COMMUNICATION CONNECTION TO THIS DEVICE MAPPING ALL REQUIRED POINTS INTO THE LNS DATABASE.
5. PROVIDE REMOTE CHILLED WATER SETPOINT ADJUSTMENT.
6. WHEN USING THERMISTOR SENSORS USE MATCHED-PAIR ELEMENTS TO ELIMINATE INTER-SENSOR ERROR FACTOR.
7. NVO IS NETWORK VARIABLE OUTPUT. NVI IS NETWORK VARIABLE INPUT.
8. PROVIDE POINTS FOR EACH PUMP.

President & CEO
Lorraine Grillo

Board of Trustees
Chancellor Richard A. Carranza, Chairman
Curtis A. Harris
Emily A. Youssouf

Architecture & Engineering
E. Bruce Barrett, R.A. LEED A.P., Vice President
Elan R. Abneri, P.E., Senior Director, Design Consultant Management
Stanley Dahir, R.A., Director, Quality Control & Construction Support
María A. Gómez, P.E., LEED A.P., Senior Director, A&E In-House Design
George D. Roussey, P.E., LEED A.P., Director, Technical Standards
Stacey Spann-Thom, Director, Operations Support

ARCHITECT
di Domenico + Partners, LLP
37-43 Crescent Street, Long Island City, New York 11101 Tel 212.337.0400 Fax 212.337.3567

MEP ENGINEER
Lilker Associates Consulting Engineers, PC
1001 Avenue of the Americas, New York, New York 10018 Tel 212.695.1000 Fax 212.695.1299

STRUCTURAL ENGINEER
Ysrael a Seinuk, PC
228 East 45th Street, New York, New York 10017 Tel 212.687.2233

CIVIL ENGINEER
Langan
360 West 31st Street, 8th Floor, New York, New York 10001 Tel 212.479.5400

ELEVATOR CONSULTANT
AB Consulting
34 Scandia Road, Congers, New York 10920 Tel 845.268.0170

Preliminary
Not For Construction

NOTE: Drawing may be printed at reduced scale

IT IS A VIOLATION OF THE STATE EDUCATION LAW SECTION 7209 (2) FOR ANY PERSON TO ALTER AN ITEM IN ANY WAY UNLESS SUCH PERSON IS ACTING UNDER THE DIRECTION OF A LICENSED PROFESSIONAL ENGINEER, AND THE ENGINEER STAMPS SUCH CHANGES

No.	Date	Revision
3	09/21/2018	100% SUBMISSION
2	06/22/2018	60% SUBMISSION
1	04/13/2018	30% SUBMISSION

Key Plan:

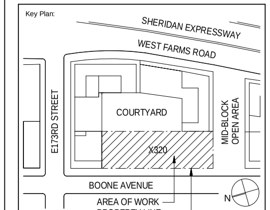

Block # 3014 Lot # 16

SCA Design Manager:	BERNARD FORTE
Project Architect/Engineer:	BRUCE LILKER, P.E.
Discipline Lead:	ANDRE FORTE
Designer:	ANDRE FORTE
Drawn by:	CHRISTOPHER ROZAN
Checked by:	SANTIAGO CABO, P.E.

LLW No.: 107404 | Facility Code: X320 | Date: 11/01/2018

Project:
PS 320X - BRONX
NEW SCHOOL

Address:
1570 BOONE AVENUE, BRONX, NY 10460

Drawing Title:
HVAC AUTOMATIC TEMPERATURE CONTROL DIAGRAM SHEET #8

Drawing No.:
M413.00

Sheets in Contract Set:
364 OF 479

Sheets in DOB Set:
- OF 0

9/20/2018 3:20:38 PM

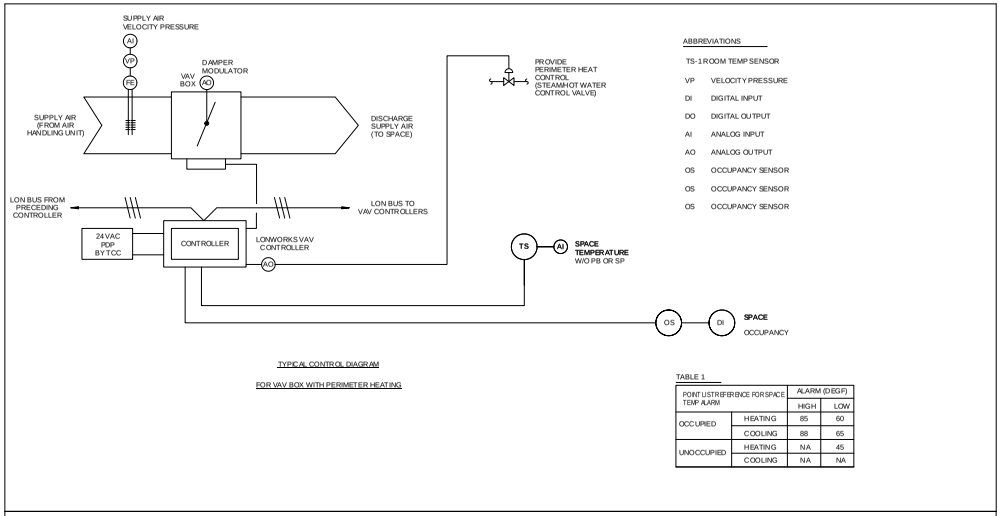

ABBREVIATIONS

TS-1 ROOM TEMP SENSOR
VP VELOCITY PRESSURE
DI DIGITAL INPUT
DO DIGITAL OUTPUT
AI ANALOG INPUT
AO ANALOG OUTPUT
OS OCCUPANCY SENSOR
OS OCCUPANCY SENSOR
OS OCCUPANCY SENSOR

TYPICAL CONTROL DIAGRAM

FOR VAV BOX WITH PERIMETER HEATING

TABLE 1

POINT LIST REFERENCE FOR SPACE TEMP ALARM		ALARM (DEGF)	
		HIGH	LOW
OCCUPIED	HEATING	85	60
	COOLING	88	65
UNOCCUPIED	HEATING	NA	45
	COOLING	NA	NA

System Type: "VARIABLE AIR VOLUME (VAV) BOX CONTROL"	Input/Output (Note 1)							Software/Firmware Features (Note 2,3)									Notes
	Sensed				Calculated			Alarms and Advisories (with instructions)					Miscellaneous Features					
Reference No. / Point Name	Analog Input	Analog Output	Digital Input	Digital Output	String Value	Num of Variable	Totalize Variable	Digital Alarm	Change-Of-State Alarm	High Limit Alarm	Low Limit Alarm	Runtime Limit (Hrs)	Broadcasted Point	"Direct Lon Communication"	Trended Value	Misc. Other	Network Variable Type	Notes
1 Space Temp	X									Table 1	Table 1				X		nvo	
2 Velocity Pressure	X					cfm											nvo	
3 Damper Position		X													X		nvo	
4 Perimeter HW Valve		X															nvo	
5 Space Occupancy Mode in Sensor			X														nvo	
6 Occupancy Mode													X				nvo	
7 Box Flow	X	E													X		nvo	
8 Space Temperature Setpoint		X													X		nvi/nvo	3
9 Active CFM Setpoint		X													X		nvo	
10 CFM Standby/Min/Max Setpoint		X															nvo	

X+ Contractor to provide quantity as required to include all instances of the indicated feature. Include multiple points within each mechanical system as necessary. Coordinate with equipment vendor.

Notes:

1. The points listed herein are the minimum points required for the control and monitoring of this equipment. This point list is typical for each mechanical/electrical system of this type. If the sequence of operation requires additional or differing information it must be provided by the respective provider of the controls for this type of equipment as coordinated by the General and Mechanical Contractors.
2. The TCC shall provide all digital alarm logic. All digital alarms shall be part of the LNS database.
3. For BMS/DDC projects, the FMSI will provide all trending and analog alarming via the Wonderware Software.
4. Provide Lon communication connection to this device mapping all required points into the LNS database.
5. Provide Occupied and Unoccupied setpoints.
6. NVO is network variable output. NVI is network variable input.

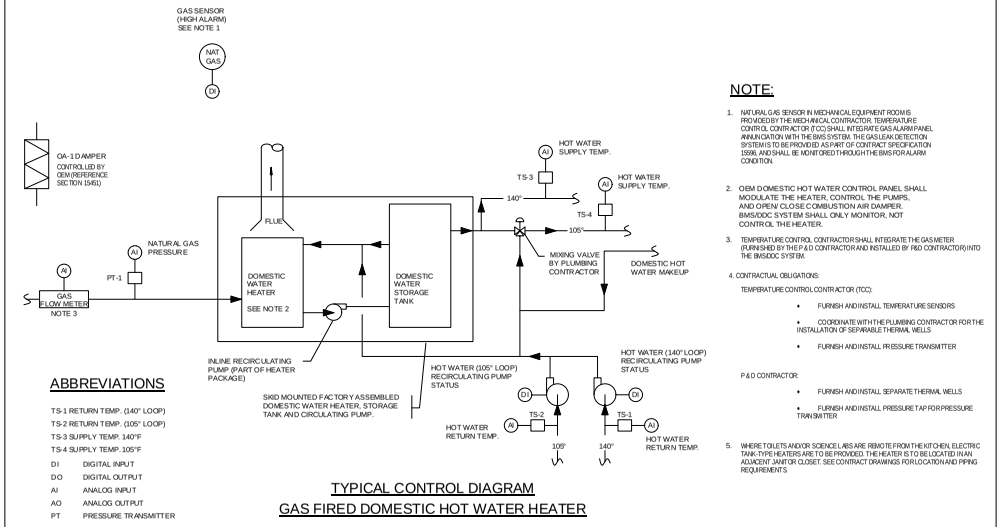

ABBREVIATIONS

TS-1 RETURN TEMP. (140° LOOP)
TS-2 RETURN TEMP. (105° LOOP)
TS-3 SUPPLY TEMP. 140°F
TS-4 SUPPLY TEMP. 105°F
DI DIGITAL INPUT
DO DIGITAL OUTPUT
AI ANALOG INPUT
AO ANALOG OUTPUT
PT PRESSURE TRANSMITTER

NOTE:

1. NATURAL GAS SENSOR IN MECHANICAL EQUIPMENT ROOM IS PROVIDED BY THE MECHANICAL CONTRACTOR. TEMPERATURE CONTROL CONTRACTOR (TCC) SHALL INTEGRATE GAS ALARM PANEL ANNUNCIATION WITH THE BMS SYSTEM. THE GAS LEAK DETECTION SYSTEM IS TO BE PROVIDED AS PART OF CONTRACT SPECIFICATION 15996, AND SHALL BE MONITORED THROUGH THE BMS FOR ALARM CONDITION.
2. OEM DOMESTIC HOT WATER CONTROL PANEL SHALL MODULATE THE HEATER, CONTROL THE PUMPS, AND OPEN/ CLOSE COMBUSTION AIR DAMPER. BMS/DDC SYSTEM SHALL ONLY MONITOR, NOT CONTROL THE HEATER.
3. TEMPERATURE CONTROL CONTRACTOR SHALL INTEGRATE THE GAS METER (FURNISHED BY THE P & D CONTRACTOR AND INSTALLED BY P&D CONTRACTOR) INTO THE BMS/DDC SYSTEM.
4. CONTRACTUAL OBLIGATIONS:

   TEMPERATURE CONTROL CONTRACTOR (TCC):

   - FURNISH AND INSTALL TEMPERATURE SENSORS
   - COORDINATE WITH THE PLUMBING CONTRACTOR FOR THE INSTALLATION OF SEPARABLE THERMAL WELLS
   - FURNISH AND INSTALL PRESSURE TRANSMITTER

   P & D CONTRACTOR:

   - FURNISH AND INSTALL SEPARATE THERMAL WELLS
   - FURNISH AND INSTALL PRESSURE TAP FOR PRESSURE TRANSMITTER
5. WHERE TOILETS AND/OR SCIENCE LABS ARE REMOTE FROM THE KITCHEN, ELECTRIC TANK-TYPE HEATERS ARE TO BE PROVIDED. THE HEATER IS TO BE LOCATED IN AN ADJACENT JANITOR CLOSET. SEE CONTRACT DRAWINGS FOR LOCATION AND PIPING REQUIREMENTS.

TYPICAL CONTROL DIAGRAM
GAS FIRED DOMESTIC HOT WATER HEATER

System Type: "GAS-FIRED DOMESTIC HW HEATER"	Input/Output (Note 1)							Software/Firmware Features (Note 2,3)									Notes
	Sensed				Calculated			Alarms and Advisories (with instructions)					Miscellaneous Features					
Reference No. / Point Name	Analog Input	Analog Output	Digital Input	Digital Output	String Value	Num of Variable	Totalize Variable	Digital Alarm	Change-Of-State Alarm	High Limit Alarm	Low Limit Alarm	Runtime Limit (Hrs)	Broadcasted Point	"Direct Lon Communication"	Trended Value	Misc. Other	Network Variable Type	Notes
1 DHW Supply Temp- 140°F	X									150°F					X		nvo	
2 DHW Return Temp- 140°F	X														X		nvo	
3 DHW Supply Temp- 105°F	X									115°F					X		nvo	
4 DHW Return Temp- 105°F	X														X		nvo	
5 Natural Gas Supply Pressure	X										X' w.c.				X		nvo	
6 Natural Gas Alarm			X					X									nvo	5
7 Natural Gas Flow	X					cfh	CCF								X		nvo	
8 DHW Pump- 140°F Status			X					X									nvo	
9 DHW Pump- 105°F Status			X					X									nvo	

X+ Contractor to provide quantity as required to include all instances of the indicated feature. Include multiple points within each mechanical system as necessary. Coordinate with equipment vendor.

Notes:

1. The points listed herein are the minimum points required for the control and monitoring of this equipment. This point list is typical for each mechanical/electrical system of this type. If the sequence of operation requires additional or differing information it must be provided by the respective provider of the controls for this type of equipment as coordinated by the General and Mechanical Contractors.
2. The TCC shall provide all digital alarm logic. All digital alarms shall be part of the LNS database.
3. For BMS/DDC projects, the FMSI will provide all trending and analog alarming via the Wonderware Software.
4. Provide Lon communication connection to this device mapping all required points into the LNS database.
5. Alarm contacts are provided by Gas Monitoring and Leak Detection System. Coordinate BMS connections with Mechanical Contractor and vendor for details.
6. NVO is network variable output. NVI is network variable input.

President & CEO
Lorraine Grillo

Board of Trustees
Chancellor Richard A. Carranza, Chairman
Curtis A. Harris
Emily A. Youssouf

SCA
Schools Construction Authority

Architecture & Engineering
E. Bruce Barrett, R.A. LEED A.P., Vice President
Elan R. Abrell, P.E., Senior Director, Design Consultant Management
Stanley Dahk, R.A., Director, Quality Control & Construction Support
Maria A. Gómez, P.E., LEED A.P., Senior Director, A&E In-House Design
George D. Roussey, P.E., LEED A.P., Director, Technical Standards
Stacey Spann-Thorn, Director, Operations Support

ARCHITECT
di Domenico + Partners, LLP
37-43 Crescent Street, Long Island City, New York 11101 Tel 212.337.0600 Fax 212.337.3567

MEP ENGINEER
Lilker Associates Consulting Engineers, PC
1001 Avenue of the Americas, New York, New York 10018 Tel 212.695.1000 Fax 212.695.1299

STRUCTURAL ENGINEER
Ysrael a Seinuk, P.C
228 East 45th Street, New York, New York 10017 Tel 212.687.2233

CIVIL ENGINEER
Langan
360 West 31st Street, 8th Floor, New York, New York 10001 Tel 212 479 5400

ELEVATOR CONSULTANT
AB Consulting
34 Sandra Road, Congers, New York 10920 Tel 845.268.0170

Preliminary
Not For Construction

NOTE: Drawing may be printed at reduced scale

IT IS A VIOLATION OF THE STATE EDUCATION LAW SECTION 7209 (2) FOR ANY PERSON TO ALTER AN ITEM IN ANY WAY UNLESS SUCH PERSON IS ACTING UNDER THE DIRECTION OF A LICENSED PROFESSIONAL ENGINEER, AND THE ENGINEER STAMPS SUCH CHANGES

No.	Date	Revision
3	09/21/2018	100% SUBMISSION
2	06/22/2018	60% SUBMISSION
1	04/13/2018	30% SUBMISSION

Key Plan:

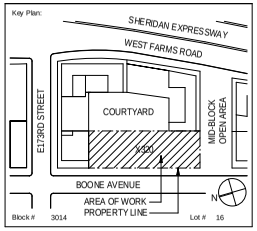

SCA Design Manager:	BERNARD FORTE
Project Architect/Engineer:	BRUCE LILKER, P.E.
Discipline Lead:	ANDRE FORTE
Designer:	ANDRE FORTE
Drawn by:	CHRISTOPHER ROZAN
Checked by:	SANTIAGO CABO, P.E.

LLW No.:	Facility Code:	Date:
107404	X320	11/01/2018

Project:
PS 320X - BRONX
NEW SCHOOL

Address:
1570 BOONE AVENUE, BRONX, NY 10460

Drawing Title:
HVAC AUTOMATIC TEMPERATURE CONTROL DIAGRAM SHEET #9

Drawing No.:
M414.00

Sheets in Contract Set:
365 OF 479

Sheets in DOB Set:
- OF 0

9/20/2018 3:20:39 PM

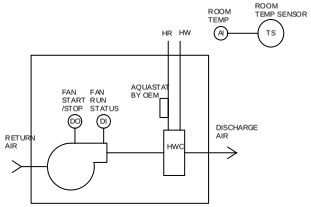

HOT WATER UNIT HEATER AND CABINET UNIT HEATER CONTROL DIAGRAM

ABBREVIATIONS

TS-1	ROOM AIR TEMP
DI	DIGITAL INPUT
DO	DIGITAL OUTPUT
AI	ANALOG INPUT
AO	ANALOG OUTPUT

NOTES:

1. SMOKE DETECTORS AND FAN SHUTDOWN ARE NOT REQUIRED FOR TERMINAL UNIT HEATERS AND CABINET UNIT HEATERS ACTING IN A PURE RECIRCULATION MODE SINCE SUCH UNITS (SERVING ONE SPACE) ARE INCAPABLE OF SPREADING SMOKE BEYOND THE ENCLOSING WALLS, FLOORS AND CEILINGS OF THE ROOM OR SPACE IN WHICH THE SMOKE IS GENERATED (REFERENCE MC 606.2 EXCEPTION).
2. HOT WATER UNIT HEATER AND CABINET UNIT HEATER AQUASTAT IS BY OEM AND FUNCTIONS AS A LOW LIMIT CONTROL.
3. ELECTRIC UNIT HEATER AND CABINET UNIT HEATER DISCHARGE AIR TEMPERATURE SENSOR IS BY OEM AND FUNCTIONS AS A HIGH LIMIT CONTROL.

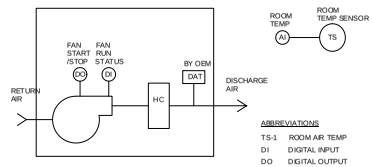

ELECTRIC UNIT HEATER AND CABINET UNIT HEATER CONTROL DIAGRAM

ABBREVIATIONS

TS-1	ROOM AIR TEMP
DI	DIGITAL INPUT
DO	DIGITAL OUTPUT
AI	ANALOG INPUT
AO	ANALOG OUTPUT
HC	ELECTRIC HEATING COIL
DAT	DISCHARGE AIR TEMPERATURE SENSOR

System Type: "HOT WATER UNIT HEATER AND CABINET UNIT HEATER"		Input/Output (Note 1)						Software/Firmware Features (Note 2,3)												Notes
		Sensed			Calculated			Alarms and Advisories (with instructions)						Miscellaneous Features						
Reference No.	Point Name	Analog Input	Analog Output	Digital Input	Digital Output	String Value	Rate of Variable	Totalizer Variable	Digital Alarm	Change Of State Alarm	High Limit Alarm	Low Limit Alarm	Runtime Limit (Hrs)	Broadcasted Point	"Direct Lon Communication"	Trended Value	Misc. Other	Network Variable Type	Notes
5	Space Temp	X										45°F				X		nvo	
11	Unit Fan Status			X					X									nvo	
12	Unit Fan S/S				X													nvo	
20	Space Temp Setpoint		X															mv/nvo	5
22	Occupancy Mode					X												nvo	

Symbol:
X = Contractor to provide quantity as required to include all instances of the indicated feature. Include multiple points within each mechanical system as necessary. Coordinate with equipment vendor.

Notes:
1. The points listed herein are the minimum points required for the control and monitoring of this equipment. This point list is typical for each mechanical/electrical system of this type. If the sequence of operation requires additional or differing information it must be provided by the respective provider of the controls for this type of equipment as coordinated by the General and Mechanical Contractors.
2. The TCC shall provide all digital alarm logic. All digital alarms shall be part of the LNS database.
3. For BMS/DDC projects, the FMSI will provide all trending and analog alarming via the Wonderware Software.
4. Provide Lon communication connection to this device mapping all required points into the LNS database.
5. Provide Occupied and Unoccupied setpoints.
6. NVO is network variable output. NVI is network variable input.

System Type: "ELECTRIC UNIT HEATER AND CABINET UNIT HEATER"		Input/Output (Note 1)						Software/Firmware Features (Note 2,3)												Notes
		Sensed			Calculated			Alarms and Advisories (with instructions)						Miscellaneous Features						
Reference No.	Point Name	Analog Input	Analog Output	Digital Input	Digital Output	String Value	Rate of Variable	Totalizer Variable	Digital Alarm	Change Of State Alarm	High Limit Alarm	Low Limit Alarm	Runtime Limit (Hrs)	Broadcasted Point	"Direct Lon Communication"	Trended Value	Misc. Other	Network Variable Type	Notes
5	Space Temp	X										45°F				X		nvo	
11	Unit Fan Status				X				X									nvo	
12	Unit Fan S/S				X													nvo	
20	Space Temp Setpoint		X															mv/nvo	5
22	Occupancy Mode					X												nvo	

Symbol:
X = Contractor to provide quantity as required to include all instances of the indicated feature. Include multiple points within each mechanical system as necessary. Coordinate with equipment vendor.

Notes:
1. The points listed herein are the minimum points required for the control and monitoring of this equipment. This point list is typical for each mechanical/electrical system of this type. If the sequence of operation requires additional or differing information it must be provided by the respective provider of the controls for this type of equipment as coordinated by the General and Mechanical Contractors.
2. The TCC shall provide all digital alarm logic. All digital alarms shall be part of the LNS database.
3. For BMS/DDC projects, the FMSI will provide all trending and analog alarming via the Wonderware Software.
4. Provide Lon communication connection to this device mapping all required points into the LNS database.
5. Provide Occupied and Unoccupied setpoints.
6. NVO is network variable output. NVI is network variable input.

System Type: "MISCELLANEOUS ENERGY MONITORING & MEASUREMENT"		Input/Output (Note 1)						Software/Firmware Features (Note 2,3)												Notes
		Sensed			Calculated			Alarms and Advisories (with instructions)						Miscellaneous Features						
Reference No.	Point Name	Analog Input	Analog Output	Digital Input	Digital Output	String Value	Rate of Variable	Totalizer Variable	Digital Alarm	Change Of State Alarm	High Limit Alarm	Low Limit Alarm	Runtime Limit (Hrs)	Broadcasted Point	"Direct Lon Communication"	Trended Value	Misc. Other	Network Variable Type	Notes
1	Main Electric Meter- Bldg. Utility			X													X	nvo	6
2	Main Gas Meter- Bldg. Utility			X													X	nvo	6
3	Gas Sub-Meter (Dhw, RTU's & Boilers)			X													X	nvo	7
4																			
5	Watt Meter- RTU's	X				KW	KWH							X	X	X		nvo	4,5
6	Watt Meter- Chillers	X				KW	KWH							X	X	X		nvo	4,5
7	Watt Meter-DHW Pumps	X				KW	KWH							X	X	X		nvo	4,5
8	Watt Meter-HW Pumps	X				KW	KWH							X	X	X		nvo	4,5
9																			
10	Watt Meter- AOU's & ACU's	X				KW	KWH							X	X	X		nvo	4,5
11	Watt Meter- C.V. Pumps - 5HP	X				KW	KWH							X	X	X		nvo	4,5
12	Watt Meter- C.V. Fans - 5HP	X				KW	KWH							X	X	X		nvo	4,5

X = Contractor to provide quantity as required to include all instances of the indicated feature. Include multiple points within each mechanical system as necessary. Coordinate with equipment vendor.

Notes:
1. The points listed herein are the minimum points required for the control and monitoring of this equipment. This point list is typical for each mechanical/electrical system of this type. If the sequence of operation requires additional or differing information it must be provided by the respective provider of the controls for this type of equipment as coordinated by the General and Mechanical Contractors.
2. The TCC shall provide all digital alarm logic. All digital alarms shall be part of the LNS database.
3. For BMS/DDC projects, the FMSI will provide all trending and analog alarming via the Wonderware Software.
4. Provide Lon communication connection to this device mapping all required points into the LNS database.
5. The TCC furnishes and installs the watt meter. TCC to coordinate the installation of the watt meter with electrical.
6. The digital input is furnished by others. This digital pulsed input represents a quantity of energy flow. TCC to coordinate with the respective contractor for the energy flow per pulse and for the meter connection details.
7. The R&D contractor furnishes the gas sub meters. TCC coordinates the installation with the R&D contractor who is responsible for the proper installation of the meter.
8. The TCC furnishes the oil meter and coordinates its installation with the Mechanical Contractor who is responsible for the proper installation of the meter.
9. Do not provide Watt Meter for any Smoke Purge type fans.
10. NVO is network variable output. NVI is network variable input.

NOTE 3

MAIN ELECTRIC METER FURNISHED BY UTILITY INSTALLED BY ELECTRIC CONTRACTOR, INTEGRATED INTO THE NETWORK BY TCC. METER TO BE FURNISHED WITH OUTPUTS TO RECEIVE CONTROL WIRING.

NOTE 3

LOW PRESSURE SERVICE:
ONE MAIN GAS METER FURNISHED BY UTILITY INSTALLED BY R&D CONTRACTOR INTEGRATED INTO THE NETWORK BY TCC. UTILITY METERS TO BE FURNISHED WITH OUTPUTS TO RECEIVE CONTROL WIRING.

NOTE 4

LOW PRESSURE SERVICE
ADDITIONAL GAS SUB METER FOR DOMESTIC HOT WATER HEATER PLUS ADDITIONAL GAS SUB METER FOR HEADER SERVING ALL BOILERS AND ALL ROOF TOP UNITS. BOTH GAS SUB METERS FURNISHED AND INSTALLED BY R&D CONTRACTOR.

NOTES:

1. TCC SHALL COORDINATE THROUGH THE G.C. AND WITH THE ELECTRICAL CONTRACTOR FOR DETAILS ON CONNECTING TO THE MAIN ELECTRIC UTILITY METER.
2. TCC SHALL COORDINATE THROUGH THE G.C. AND WITH THE PLUMBING CONTRACTOR FOR DETAILS ON CONNECTING TO THE MAIN GAS METER (S) AND ALL GAS SUB METERS.
3. TCC SHALL PROVIDE PULSE-ACCUMULATION STYLE DIGITAL INPUTS (DI) SUITABLE FOR THIS PURPOSE AND SIZED FOR THE PULSE FREQUENCY IN ORDER TO TOTALIZE KWH AND CF.
4. TCC SHALL PROVIDE PULSE-ACCUMULATION STYLE DIGITAL INPUTS (DI) SUITABLE FOR THIS PURPOSE AND SIZED FOR THE PULSE FREQUENCY IN ORDER TO TOTALIZE. TCC SHALL ALSO PROVIDE ANALOG INPUTS (AI) TO RECORD RATE USAGE OF ELECTRICITY (KW) AND RATE USAGE OF GAS (CFH) (AND RATE USAGE OF OIL (GPM) IF APPLICABLE).

LON NETWORK

ADDITIONAL ELECTRIC METERS FURNISHED AND INSTALLED BY TCC FOR ELECTRICAL USAGE MONITORING OF EACH CHILLER, EACH CHILLER CONSTANT VOLUME WATER PUMP, EACH BOILER CONSTANT VOLUME WATER PUMP, EACH AIR-COOLED CONDENSER AND EACH AIR COOLED CONDENSING UNIT, INTEGRATED INTO THE NETWORK BY TCC.

LON NETWORK

ADDITIONAL ELECTRIC METERS FURNISHED AND INSTALLED BY TCC FOR EACH CONSTANT VOLUME PUMP AND EACH CONSTANT VOLUME FAN GREATER THAN OR EQUAL TO 5 HP (REFER TO SECTION 15970 ARTICLE 2.9), INTEGRATED INTO THE NETWORK BY TCC.

TYPICAL ENERGY METERING

ABBREVIATIONS

DI	DIGITAL INPUT (PULSE-ACCUMULATOR)
DO	DIGITAL OUTPUT
AI	ANALOG INPUT
AO	ANALOG OUTPUT
G.M.	GAS METER
E.M.	ELECTRIC METER
O.M.	OIL METER

President & CEO
Lorraine Grillo

Board of Trustees
Chancellor Richard A. Carranza, Chairman
Curtis A. Harris
Emily A. Youssouf

SCA

Architecture & Engineering
E. Bruce Barnett, R.A. LEED A.P., Vice President
Elan R. Abrnes, P.E., Senior Director, Design Consultant Management
Stanley Dahir, R.A., Director, Quality Control & Construction Support
Marila A. Gomez, P.E., LEED A.P., Senior Director, A&E In-House Design
George D. Roussey, P.E., LEED A.P., Director, Technical Standards
Stacey Spann-Thom, Director, Operations Support

ARCHITECT
di Domenico + Partners, LLP
3743 Crescent Street, Long Island City, New York 11101 Tel 212.337.0400 Fax 212.337.3597

MEP ENGINEER
Lilker Associates Consulting Engineers, PC
101 Avenue of the Americas, New York, New York 10013 Tel 212.695.1000 Fax 212.695.1299

STRUCTURAL ENGINEER
Ysrael a Seinuk, PC
225 East 45th Street, New York, New York 10017 Tel 212.687.2233

CIVIL ENGINEER
Langan
360 West 31st Street, 8th Floor, New York, New York 10001 Tel 212.479.5400

ELEVATOR CONSULTANT
AB Consulting
34 Scandia Road, Congers, New York 10920 Tel 845.268.0130

Preliminary
Not For Construction

NOTE: Drawing may be printed at reduced scale

IT IS AVIOLATION OF THE STATE EDUCATION LAW SECTION 7209 (2) FOR ANY PERSON TO ALTER AN ITEM IN ANY WAY UNLESS SUCH PERSON IS ACTING UNDER THE DIRECTION OF A LICENSED PROFESSIONAL ENGINEER, AND THE ENGINEER STAMPS SUCH CHANGES

No.	Date	Revision
3	09/21/2018	100% SUBMISSION
2	06/22/2018	60% SUBMISSION
1	04/13/2018	30% SUBMISSION

Key Plan:

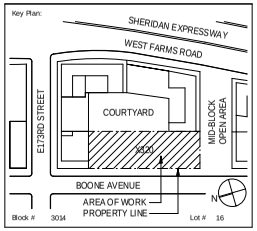

SCA Design Manager:	BERNARD FORTE
Project Architect/Engineer:	BRUCE LILKER, P.E.
Discipline Lead:	ANDRE FORTE
Designer:	ANDRE FORTE
Drawn by:	CHRISTOPHER ROZAN
Checked by:	SANTIAGO CABO, P.E.

LLW No:	Facility Code:	Date:
107404	X320	11/01/2018

Project:
PS 320X - BRONX
NEW SCHOOL

Address:
1570 BOONE AVENUE, BRONX, NY 10460

Drawing Title:
HVAC AUTOMATIC TEMPERATURE CONTROL DIAGRAM SHEET #10

Drawing No.:
M415.00

Sheets in Contract Set:
366 OF 479

Sheets in DOB Set:
- OF 0

9/20/2018 3:20:39 PM

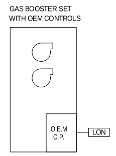

TYPICAL GAS BOOSTER PUMP MONITORING

SEE NOTES 1 AND 2

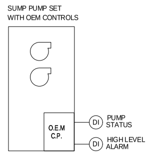

TYPICAL SUMP PUMP SET MONITORING

SEE NOTES 1 AND 3

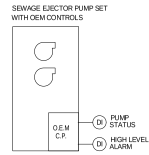

TYPICAL SEWAGE PUMP SET MONITORING

SEE NOTES 1 AND 3

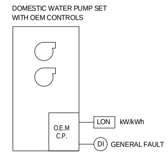

TYPICAL DOMESTIC WATER BOOSTER SET MONITORING

SEE NOTES 4

NOTES:

1. TCC SHALL COORDINATE THROUGH THE G.C. AND M.C. WITH THE PLUMBING CONTRACTOR FOR DETAILS ON CONNECTING TO THE MISCELLANEOUS PUMP CONTROLS.
2. OEM SHALL PROVIDE CONTROL OF THE GAS BOOSTER PUMPS. SENSORS UTILIZED BY OEM CONTROL SYSTEM CAN ALSO BE UTILIZED FOR BMS/DDC SYSTEM BY WIRING IN SERIES OR PARALLEL AS REQUIRED, OR MAPPING THROUGH THE GATEWAY. OTHER ALTERNATE IS FOR TCC TO PROVIDE THEIR OWN MONITORING SENSORS. THE TCC SYSTEM SHALL ONLY MONITOR AND NOT CONTROL THE GAS BOOSTER PUMPS.
3. OEM SHALL PROVIDE CONTROL OF THE PUMP SET(S) THE TCC SHALL MONITOR AND NOT CONTROL THE PUMPS.
4. OEM SHALL PROVIDE CONTROL OF THE PUMP SET(S). TCC SHALL INSTALL kW/kWh METER TO PROVIDE INDICATION TO LON NETWORK.

ABBREVIATIONS

DI	DIGITAL INPUT (PULSE-ACCUMULATOR)
DO	DIGITAL OUTPUT
AI	ANALOG INPUT
AO	ANALOG OUTPUT

System Type: MISCELLANEOUS PUMP MONITORING & MEASURING		Input/Output (Note 1) Sensed				Calculated			Software/Firmware Features (Note 2,3) Alarms and Advisories (with instructions)					Miscellaneous Features					Notes
Reference No.	Point Name	Analog Input	Analog Output	Digital Input	Digital Output	String Value	Rate of Variable	Totalize Variable	Digital Alarm	Change-Of-State Alarm	High Limit Alarm	Low Limit Alarm	Runtime Limit (Hrs)	Broadcasted Point	"Direct Lon Communication"	Trended Value	Misc. Other	Network Variable Type	Notes
1	Gas Booster Pump Set																	nvo	4
2	Power ON Status			X														nvo	4
3	Inlet Gas Pressure			X								3" w.c.						nvo	4
4	Outlet Gas Pressure			X							15" w.c.	4" w.c.						nvo	4
5	Booster Pump #1 Status			X									1,000					nvo	4
6																			
7																			
8	Common Maintenance Alarm									X								nvo	4
9	Sump Pump Set: Pump Status			X									1,000					nvo	6
11	Sump Pump Set: High Level Alarm			X						X								nvo	5
10	Sewage Ejector Set: Pump Status			X									1,000					nvo	6
11	Sewage Ejector Set: High Level Alarm			X						X								nvo	5
12	Domestic Booster Set: General Fault			X						X								nvo	5
13	Domestic Booster Set: kW/kWh														X			nvo	8

Symbol:

X = Contractor to provide quantity as required to include all instances of the indicated feature. Include multiple points within each mechanical system as necessary. Coordinate with equipment vendor.

Notes:

1. The points listed herein are the minimum points required for the control and monitoring of this equipment. This point list is typical for each mechanical/electrical system of this type. If the sequence of operation requires additional or differing information it must be provided by the respective provider of the controls for this type of equipment as coordinated by the General and Mechanical Contractors.
2. The TCC shall provide all digital alarm logic. All digital alarms shall be part of the LNS database.
3. For BMS/DDC projects, the FMSI will provide all trending and analog alarming via the Wonderware Software.
4. This Lon-Based device is furnished by the Plumbing Contractor as part of the Gas Booster Package. The OEM furnishes the local controller with the Lon-Gateway communication card. TCC shall map points to the LNS database.
5. Integrate local O.E.M panel annunciating alarm into BMS/DDC network.
6. Provide current switches as required.
7. NVO is network variable output. NVI is network variable input.
8. Provide kW/kWh meter as required.

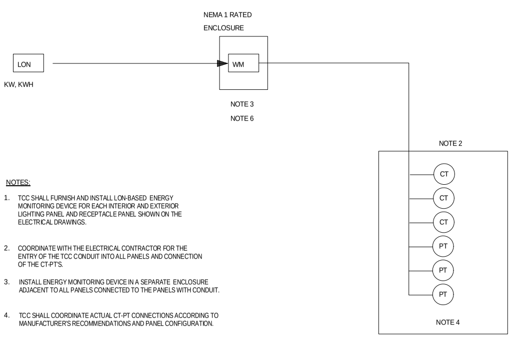

NOTES:

1. TCC SHALL FURNISH AND INSTALL LON-BASED ENERGY MONITORING DEVICE FOR EACH INTERIOR AND EXTERIOR LIGHTING PANEL AND RECEPTACLE PANEL SHOWN ON THE ELECTRICAL DRAWINGS.
2. COORDINATE WITH THE ELECTRICAL CONTRACTOR FOR THE ENTRY OF THE TCC CONDUIT INTO ALL PANELS AND CONNECTION OF THE CT-PTS.
3. INSTALL ENERGY MONITORING DEVICE IN A SEPARATE ENCLOSURE ADJACENT TO ALL PANELS CONNECTED TO THE PANELS WITH CONDUIT.
4. TCC SHALL COORDINATE ACTUAL CT-PT CONNECTIONS ACCORDING TO MANUFACTURER'S RECOMMENDATIONS AND PANEL CONFIGURATION.
5. SEE ELECTRICAL CONTRACT DRAWINGS FOR QUANTITY OF LIGHTING PANELS AND RECEPTACLE PANELS.
6. TCC SHALL INSTALL ALL PANEL KW/KWH METERS SUCH THAT KW/KWH METER IS STILL POWERED WHEN LOAD IS SWITCHED OFF BY PANEL SCHEDULE.

NAME OF PANELS

LP-1, LP-2, LP-3, LP-4, LP-5
RP-1, RP-2, RP-3, RP-4, RP-5

TYPICAL PANEL

NOTE 5

ABBREVIATIONS

DI	DIGITAL INPUT
DO	DIGITAL OUTPUT
AI	ANALOG INPUT
AO	ANALOG OUTPUT
KW	KILOWATT
WM	WATT METER
PT	POTENTIAL TRANSMITTERS
CT	CURRENT TRANSMITTERS
KWH	KILOWATT-HOUR

System Type: "LIGHTING AND RECEPTACLE MONITORING & MEASUREMENT"		Input/Output (Note 1) Sensed				Calculated			Software/Firmware Features (Note 2,3) Alarms and Advisories (with instructions)					Miscellaneous Features					Notes
Reference No.	Point Name	Analog Input	Analog Output	Digital Input	Digital Output	String Value	Rate of Variable	Totalize Variable	Digital Alarm	Change-Of-State Alarm	High Limit Alarm	Low Limit Alarm	Runtime Limit (Hrs)	Broadcasted Point	"Direct Lon Communication"	Trended Value	Misc. Other	Network Variable Type	Notes
1	Watt Meter	X					KW	KWH						X	X	X		nvo	4,5

Symbol:

X = Contractor to provide quantity as required to include all instances of the indicated feature. Include multiple points within each mechanical system as necessary. Coordinate with equipment vendor.

Notes:

1. The points listed herein are the minimum points required for the control and monitoring of this equipment. This point list is typical for each mechanical/electrical system of this type. If the sequence of operation requires additional or differing information it must be provided by the respective provider of the controls for this type of equipment as coordinated by the General and Mechanical Contractors.
2. The TCC shall provide all digital alarm logic. All digital alarms shall be part of the LNS database.
3. For BMS/DDC projects, the FMSI will provide all trending and analog alarming via the Wonderware Software.
4. Provide Lon communication connection to this device mapping all required points into the LNS database.
5. The TCC furnishes and installs the watt-meter. TCC to coordinate the installation of the watt-meter with Electrical.
6. See the Electrical Contract drawings for quantity of lighting and receptacle panels.
7. NVO is network variable output. NVI is network variable input.

President & CEO
Lorraine Grillo

Board of Trustees
Chancellor Richard A. Carranza, Chairman
Curtis A. Harris
Emily A. Youssouf

Architecture & Engineering
E. Bruce Barrett, R.A. LEED A.P., Vice President
Elan R. Abneri, P.E., Senior Director, Design Consultant Management
Stanley Dahir, R.A., Director, Quality Control & Construction Support
Maria A. Gómez, P.E., LEED A.P., Senior Director, A&E In-House Design
George D. Roussey, P.E., LEED A.P., Director, Technical Standards
Stacey Spann-Thom, Director, Operations Support

ARCHITECT
di Domenico + Partners, LLP
37-43 Crescent Street, Long Island City, New York 11101 Tel 212.337.0400 Fax 212.337.3567

MEP ENGINEER
Lilker Associates Consulting Engineers, PC
1001 Avenue of the Americas, New York, New York 10018 Tel 212.695.1000 Fax 212.695.1299

STRUCTURAL ENGINEER
Ysrael a Seinuk, PC
228 East 45th Street, New York, New York 10017 Tel 212.687.2233

CIVIL ENGINEER
Langan
360 West 31st Street, 8th Floor, New York, New York 10001 Tel 212.479.5400

ELEVATOR CONSULTANT
AB Consulting
34 Scandia Road, Congers, New York 10920 Tel 845.268.0170

Preliminary
Not For Construction

NOTE: Drawing may be printed at reduced scale

IT IS A VIOLATION OF THE STATE EDUCATION LAW SECTION 7209 (2) FOR ANY PERSON TO ALTER AN ITEM IN ANY WAY UNLESS SUCH PERSON IS ACTING UNDER THE DIRECTION OF A LICENSED PROFESSIONAL ENGINEER, AND THE ENGINEER STAMPS SUCH CHANGES

No.	Date	Revision
3	09/21/2018	100% SUBMISSION
2	06/22/2018	60% SUBMISSION
1	04/13/2018	30% SUBMISSION

Key Plan:

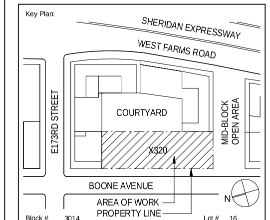

Block # 3014 Lot # 16

SCA Design Manager:	BERNARD FORTE
Project Architect/Engineer:	BRUCE LILKER, P.E.
Discipline Lead:	ANDRE FORTE
Designer:	ANDRE FORTE
Drawn by:	CHRISTOPHER ROZAN
Checked by:	SANTIAGO CABO, P.E.

LLW No.:	Facility Code:	Date:
107404	X320	11/01/2018

Project:
PS 320X - BRONX
NEW SCHOOL

Address:
1570 BOONE AVENUE, BRONX, NY 10460

Drawing Title:
HVAC AUTOMATIC TEMPERATURE CONTROL DIAGRAM SHEET #11

Drawing No.:
M416.00

Sheets in Contract Set:
367 OF 479

Sheets in DOB Set:
- OF 0

9/20/2018 3:20:40 PM

This page intentionally left blank.

NEW YORK CITY SCHOOL CONSTRUCTION AUTHORITY
SPECIFICATIONS FOR
NEW PRIMARY SCHOOL 320X – COMPLIANCE SUBMISSION

TABLE OF CONTENTS
02/07/19

DIVISION 1 - GENERAL & SUPPLEMENTARY REQUIREMENTS

GENERAL REQUIREMENTS

G01000 - SPECIFICATIONS FORMAT
G01015 - MISCELLANEOUS PROVISIONS
G01200 - PROJECT MEETINGS
G01600 - MATERIAL AND EQUIPMENT
G01700 - PROJECT CLOSEOUT
G01720 - RECORD DOCUMENTS
G01740 - GUARANTEES, WARRANTIES, & BONDS

SUPPLEMENTARY REQUIREMENTS

S01010 - SUMMARY OF WORK
S01060 - PERMITS, FEES, AND CERTIFICATES OF OCCUPANCY
S01300 - SUBMITTALS
S01311 - PROGRESS SCHEDULE (CAPACITY PROJECTS)
S01352 – SUSTAINABILITY REQUIREMENTS
S01400 - QUALITY CONTROL
S01426 - SAMPLE CLASSROOM
S01500 - TEMPORARY FACILITIES AND CONTROLS
S01524 – CONSTRUCTION WASTE MANAGEMENT
S01535 - SAFETY PROGRAM
S01550 – INDOOR AIR QUALITY (IAQ) REQUIREMENTS
S01560 – INSTALLATION SEQUENCE OF FINISH MATERIALS
S01630 - PRODUCT SUBSTITUTIONS
S01650 - FACILITY START-UP, DEMONSTRATION, AND TRAINING
S01660 – SUPPLEMENTAL COMMISSIONING REQUIREMENTS
S01730 - SYSTEMS OPERATION AND MAINTENANCE MANUALS
S01900 - EXISTING PREMISES WORK

DIVISION 2 - SITEWORK

02010 – ENVIRONMENTAL ASSESSMENT REPORTS - (IEH-Langan)
02070 - SELECTIVE REMOVALS & DEMOLITION
02100 - SITE PREPARATION
02200 – EARTHWORK- (LANGAN)
02220 – GAS VAPOR BARRIER - (IEH-Langan)
02221 – SUB-SLAB DEPRESSURIZATION SYSTEM - (IEH-Langan)
02250 - FOUNDATION AND OTHER CHANGE ADJUSTMENTS-(LANGAN)
02513 - SIDEWALK AND STREET PAVING
02711 - WALL SUBDRAINAGE SYSTEMS
02723 - STORM DRAINAGE SYSTEMS-(LANGAN)
02831 - CHAIN LINK FENCES AND GATES
02860 - EARLY CHILDHOOD PLAYGROUND EQUIPMENT
02870 - SITE AND STREET FURNISHINGS
02900 - LANDSCAPING

DIVISION 3 - CONCRETE

03100 - CONCRETE FORMWORK- (YAS)
03200 - CONCRETE REINFORCEMENT – (YAS)
03200a –EPOXY COATED CONCRETE REINFORCEMENT – (YAS)
03300 - CAST-IN-PLACE CONCRETE-(YAS)
03450 - ARCHITECTURAL PRE-CAST CONCRETE
03542 - CEMENT-BASED SELF-LEVELING UNDERLAYMENT
03610 - GROUTING

DIVISION 4 - MASONRY

04200 - UNIT MASONRY

DIVISION 5 - METALS

05120 - STRUCTURAL STEEL- (YAS)
05170 - SUPPORT SYSTEM FOR SUSPENDED CEILINGS
05300 - METAL DECK- (YAS)
05500 - METAL FABRICATIONS
05580 - SHEET METAL FABRICATIONS
05700 - ORNAMENTAL METAL
05710 - STEEL STAIRS
05810 - PREFABRICATED EXPANSION JOINT COVERS

DIVISION 6 - WOOD AND PLASTICS

06100 - ROUGH CARPENTRY
06200 - FINISH CARPENTRY
06410 - CUSTOM CASEWORK

DIVISION 7 - THERMAL AND MOISTURE PROTECTION

07110 - SHEET MEMBRANE WATERPROOFING
07115 - SHEET MEMBRANE WATERPROOFING FOR FOUNDATIONS
07147 - CRYSTALLINE WATERPROOFING
07211 - PERIMETER FOUNDATION INSULATION
07212 - MISCELLANEOUS BUILDING INSULATION
07260 - INTUMESCENT FIRE-RESISTANT COATINGS
07270 - FIRESTOPPING/SMOKE SEALS
07272 – FLUID-APPLIED MEMBRANE AIR BARRIER, VAPOR RETARDING
07560 - FLUID-APPLIED PROTECTED MEMBRANE ROOFING
07600 - FLASHING AND SHEET METAL
07720 - ROOF ACCESSORIES
07900 - JOINT SEALERS

DIVISION 8 - DOORS AND WINDOWS

08110 - STEEL DOORS AND FRAMES
08210 - WOOD DOORS
08305 - ACCESS DOORS
08330 - COILING DOORS, GRILLES AND SHUTTERS
08524 - ALUMINUM PROJECTED WINDOWS
08662 - SECURITY SCREENS/BARRIERS
08710 - FINISH HARDWARE
08730 - THRESHOLDS, WEATHERSTRIPPING AND SEALS
08800 - MISCELLANEOUS GLAZING
08921 – ALUMINUM STOREFRONT

DIVISION 9 - FINISHES

09260 - GYPSUM BOARD ASSEMBLIES
09310 - CERAMIC TILE
09411 - TERRAZZO TILE, PRECAST STAIR TREADS & RISERS
09510 - ACOUSTICAL CEILINGS
09590 - WOOD FLOORING
09626 - RESILIENT ATHLETIC FLOORING
09650 - RESILIENT FLOORING
09675 – FLUID-APPLIED EQUIPMENT ROOM FLOORING
09860 - GRAFFITI RESISTANT COATINGS
09900 - PAINTING

DIVISION 10 - SPECIALTIES

10100 - VISUAL DISPLAY BOARDS
10151 - TOILET COMPARTMENTS
10185 - PLASTIC SHOWER AND DRESSING COMPARTMENTS
10214 - STATIONARY METAL WALL LOUVERS
10350 - FLAGPOLE
10400 - IDENTIFYING DEVICES

10415 - BULLETIN BOARDS, GLAZED DISPLAY BOARDS, DISPLAY CABINETS AND CASES
10505 - METAL LOCKERS
10522 - FIRE EXTINGUISHERS AND CABINETS
10605 - WIRE MESH WORK
10675 - METAL STORAGE SHELVING
10720 - WINDOW GUARDS
10810 - TOILET AND BATH ACCESSORIES
10830 - MIRRORS
10840 - GRAB BARS

DIVISION 11 - EQUIPMENT

11061 - PLATFORM CURTAINS, AUDITORIUM WINDOW CURTAINS
11172 - WASTE HANDLING EQUIPMENT
11400 - FOOD SERVICE EQUIPMENT
11480 - GYMNASIUM EQUIPMENT

DIVISION 12 - FURNISHINGS

12302 - MANUFACTURED WOOD CASEWORK
12485 – FOOT GRILLES
12501 – CHAIN AND CLUTCH OPERATED WINDOW SHADES
12545 - DRAPERIES
12711 – TELESCOPING SEATING

DIVISION 14 - CONVEYING SYSTEMS

14211 - GEARED TRACTION PASSENGER ELEVATORS- (AB CONSULTING)
14420 – HYDRAULIC VERTICAL WHEELCHAIR LIFTS

DIVISION 15 – MECHANICAL- LILKER

FIRE PROTECTION

15301 – GENERAL PROVISIONS FOR FIRE PROTECTION SYSTEMS WORK
15330 – SPRINKLER SYSTEM
15332 - COMBINATION WET STANDPIPE/SPRINKLER SYSTEM
15333 – FIRE PUMPS/SPRINKLER BOOSTER PUMPS

PLUMBING AND DRAINAGE

15401 – GENERAL PROVISIONS FOR PLUMBING AND DRAINAGE WORK
15410 - PLUMBING PIPING
15411 - HANGERS AND SUPPORTS
15412 - VALVES
15413 - INSULATION (P&D)
15414 - TESTS
15415 - DRAINAGE
15416 - GAS PIPING SYSTEM
15417 - COLD WATER SUPPLY
15418 - HOT WATER SUPPLY
15431 - TAGS, CHARTS AND IDENTIFICATION
15432 - MISCELLANEOUS
15440 - PLUMBING FIXTURES
15451 - WATER HEATERS
15453 - PUMPING APPARATUS AND TANKS

HEATING, VENTILATING AND AIR CONDITIONING

15501 – GENERAL PROVISIONS FOR HEATING, VENTILATING AND AIR CONDITIONING WORK
15502 - HVAC IDENTIFICATION
15504 - VIBRATION ISOLATION
15510 - HVAC PIPING
15511 - VALVES (HVAC)
15512 - PIPING INSULATION (HVAC)
15514 - DUCTWORK INSULATION
15515 - HYDRONIC SPECIALTIES
15517 - WATER TREATMENT FOR HYDRONIC SYSTEMS
15540 - HVAC PUMPS
15565 – HOT WATER CONDENSING BOILERS
15570 - BOILER ACCESSORIES
15575 - BREECHING, CHIMNEY CONNECTORS AND CHIMNEYS
15596 – NATURAL GAS LEAK DETECTION EQUIPMENT
15660 – PACKAGED MODULAR OUTDOOR CHILLERS
15670 – PLATE HEAT EXCHANGERS
15783 - SPLIT HEAT PUMP SYSTEM
15792 - COILS
15835 - CONVECTORS

15836 - UNIT HEATERS/CABINET HEATERS
15839 – DOOR AIR CURTAINS
15852 - AIR HANDLING UNITS
15880 – SSDS ACCESSORIES - (IEH-Langan)
15891 - METAL DUCTWORK
15910 - DUCT ACCESSORIES
15915 - DAMPERS
15930 - VARIABLE AIR TERMINALS
15935 - SINGLE ZONE VARIABLE AIR VOLUME (SZVAV) AIR HANDLING UNITS FOR PUBLIC ASSEMBLY SPACES
15940 - AIR OUTLETS AND INLETS
15970 - TEMPERATURE CONTROL SYSTEM (LONWORKS BMS/DDC WITH SCHOOL OPERATING CONSOLE)
15973 - FACILITY MANAGEMENT SYSTEMS INTEGRATION
15980 - THERMOMETERS AND GAUGES
15985 - SEQUENCE OF OPERATIONS
15992 - CLEANING AND TESTING
15993 - BALANCING OF SYSTEMS

DIVISION 16 – ELECTRICAL-LILKER

16010 - GENERAL PROVISIONS FOR ELECTRICAL WORK
16120 - WIRING SYSTEMS
16130 - RACEWAYS, FITTINGS, SUPPORTING DEVICES, BOXES AND ACCESSORIES
16140 - WIRING DEVICES
16145 - LIGHTING CONTROL DEVICES
16289 – SURGE PROTECTION DEVICES
16420 - SERVICE ENTRANCE EQUIPMENT
16425 - SWITCHBOARDS
16441 - ENCLOSED SWITCHES
16450 - GROUNDING AND BONDING
16471 - AUDITORIUM AND TELEVISION STUDIO DIMMING SYSTEM
16475 - OVERCURRENT PROTECTIVE DEVICES, CIRCUIT BREAKERS AND FUSES
16480 - MOTORS, MOTOR CONTROL CENTERS, STARTERS AND CONTROL EQUIPMENT
16520 - ILLUMINATED EXIT SIGN AND EMERGENCY LIGHTING FIXTURES
16530 – LED SITE/SECURITY LIGHTING
16701 - AUXILIARY SIGNAL SYSTEMS
16719 - IN-BUILDING AUXILIARY RADIO COMMUNICATION SYSTEM
16720 - FIRE DETECTION AND ALARM SYSTEM WITH CENTRAL OFFICE CONNECTION
16724 - INTRUSION ALARM SYSTEM
16725 - TELEPHONE CABLING SYSTEM
16726 - INTERCOM SYSTEM FOR FIRE RESCUE AREAS AND EMERGENCY TELEPHONE FOR ELEVATORS
16727 - DATA CABLING SYSTEM
16728 - FIBER OPTIC CABLING SYSTEM
16770 - SOUND, INTERCOM AND TEACHER ACTIVATED SECURITY SYSTEM

16771 - PROJECTION AND INTERACTIVE WHITEBOARD SYSTEMS
16775 - AUDIO FREQUENCY INDUCTION LOOP SYSTEM (AFILS)
16785 - INTERNET PROTOCOL DIGITAL VIDEO SURVEILLANCE (IPDVS) SYSTEM USING DIGITAL CAMERAS (CAPACITY PROJECTS-NEW CONSTRUCTION)
16791 - SELF-CORRECTIVE CLOCK SYSTEM

END OF TABLE OF CONTENTS

* * *

LIST OF DRAWINGS

VOLUME 01

DWG. NO.	TITLE	DATE
	ZONING	
T001	COVER SHEET	02/07/19
T002	LIST OF DRAWINGS - 1	02/07/19
T003	LIST OF DRAWINGS - 2	02/07/19
T004	LIST OF DRAWINGS - 3	02/07/19
T005	SCOPE OF WORK, BUILDING DEPARTMENT NOTES, GENERAL NOTES, SPECIAL INSPECTIONS, PROGRESS INSPECTIONS, SITE SAFETY NOTES AND ALLOWANCES	02/07/19
T006	ABBREVIATIONS, REFERENCE SYMBOLS, SITE PLAN, DRAFTING SYMBOLS, AND LOCATION PLAN	02/07/19
T007	TYPICAL ADA STANDARD REQUIREMENTS AND CLEARANCES	02/07/19
T008	ACCESSIBLE PLUMBING FIXTURES AND ACCESSORIES MOUNTING HEIGHTS AND LOCATIONS	02/07/19
T009	TYPICAL TOILET AND ACCESSORIES MOUNTING HEIGHTS AND LOCATIONS	02/07/19
	ZONING	
Z001	ZONING ANALYSIS, ZONING MAP, ZONING NOTES, AND ZONING KEY PLAN	02/07/19
Z002	ZONING LOT AND BASE PLAN DIAGRAM, BASE PLAN AND LOT COVERAGE CALCULATIONS	02/07/19
Z003	ZONING SECTION DIAGRAMS	02/07/19
	ENERGY CODE COMPLIANCE	
EN001	NYCECC ENVELOPE PROGRESS INSPECTIONS AND ANALYSIS	02/07/19
EN002	NYCECC PROGRESS INPSECTIONS	02/07/19
EN003	ENERGY ANALYSIS - 1	02/07/19
EN004	ENERGY ANALYSIS - 2	02/07/19
EN005	ENERGY ANALYSIS - 3	02/07/19
EN006	ENERGY ANALYSIS - 4	02/07/19
EN101	CELLAR LIGHTING PLAN (FOR REFERENCE ONLY)	02/07/19
EN102	FIRST FLOOR LIGHTING PLAN (FOR REFERENCE ONLY)	02/07/19
EN103	SECOND FLOOR LIGHTING PLAN (FOR REFERENCE ONLY)	02/07/19
EN104	THIRD FLOOR LIGHTING PLAN (FOR REFERENCE ONLY)	02/07/19
EN105	FOURTH FLOOR LIGHTING PLAN (FOR REFERENCE ONLY)	02/07/19
EN106	FIFTH FLOOR LIGHTING PLAN (FOR REFERENCE ONLY)	02/07/19
EN107	ROOF LIGHTING PLAN (FOR REFERENCE ONLY)	02/07/19
	PLACE OF ASSEMBLY	
PA101	PLACE OF ASSEMBLY - CAFETERIA	02/07/19
PA102	PLACE OF ASSEMBLY - GYMNASIUM	02/07/19
PA103	PLACE OF ASSEMBLY - AUDITORIUM	02/07/19

DWG. NO.	TITLE	DATE
PA104	PLACE OF ASSEMBLY - ROOFTOP PLAY AREA	02/07/19
	BUILDERS PAVEMENT PLAN	
BPP101	BUILDERS PAVEMENT PLAN: COVER SHEET	02/07/19
BPP201	BOONE AVENUE PLAN & PROFILE	02/07/19
BPP202	BOONE AVENUE PLAN & PROFILE	02/07/19
BPP301	BUILDERS PAVEMENT PLAN: DETAILS	02/07/19
SCP101	SITE CONNECTION PROPOSAL - SITE PLAN (FOR REFERENCE ONLY)	02/07/19
	CIVIL	
C100	SOIL EROSION AND SEDIMENT CONTROL PLAN	02/07/19
C110	SITE REMOVALS PLAN	02/07/19
C140	SITE UTILITY PLAN	02/07/19
C150	SITE DETAILS	02/07/19
C151	SITE DETAILS	02/07/19
	BORINGS	
B101	BORING LOCATION PLAN	02/07/19
B102	BORING LOG	02/07/19
	SURVEY	
R001	SITE SURVEY - FOR REFERENCE ONLY	02/07/19
	ENVIRONMENTAL	
H201	SUB-SLAB DEPRESSURIZATION SYSTEM LAYOUT	02/07/19
H202	SUB-SLAB DEPRESSURIZATION SYSTEM RISER AND ROOF PLAN	02/07/19
H203	SUB-SLAB DEPRESSURIZATION SYSTEM DETAILS	02/07/19
H204	SUB-SLAB DEPRESSURIZATION SYSTEM EQUIPMENT AND INSTRUMENTATION DETAILS	02/07/19
	ARCHITECTURAL	
A020	FIRE PROTECTION PLAN - CELLAR & FIRST FLOOR	02/07/19
A021	FIRE PROTECTION PLAN - SECOND & THIRD FLOOR	02/07/19
A022	FIRE PROTECTION PLAN - FOURTH & FIFTH FLOOR	02/07/19
A023	FIRE PROTECTION PLAN - MAIN ROOF LEVEL	02/07/19
A024	STAIRS AND DOORS EGRESS - CALCULATIONS	02/07/19
A035	SITE PLAN	02/07/19
A101	CELLAR FLOOR PLAN	02/07/19
A102	FIRST FLOOR PLAN	02/07/19
A103	SECOND FLOOR PLAN	02/07/19
A104	THIRD FLOOR PLAN	02/07/19
A105	FOURTH FLOOR PLAN	02/07/19
A106	FIFTH FLOOR PLAN	02/07/19

DWG. NO.	TITLE	DATE
A107	ROOF PLAN	02/07/19
A108	PENTHOUSE ROOF PLAN	02/07/19
A109	CELLAR FLOOR SLAB EDGE PLAN	02/07/19
A110	FIRST FLOOR SLAB EDGE PLAN	02/07/19
A111	SECOND FLOOR SLAB EDGE PLAN	02/07/19
A112	THIRD FLOOR SLAB EDGE PLAN	02/07/19
A113	FOURTH FLOOR SLAB EDGE PLAN	02/07/19
A114	FIFTH FLOOR SLAB EDGE PLAN	02/07/19
A115	ROOF SLAB EDGE PLAN	02/07/19
A116	PENTHOUSE ROOF SLAB EDGE PLAN	02/07/19
A117	FLOOR PATTERNS - 1	02/07/19
A118	FLOOR PATTERNS - 2	02/07/19
A119	FLOOR PATTERNS - 3	02/07/19
A120	FLOOR PATTERNS - 4	02/07/19
A121	FLOOR PATTERNS - 5	02/07/19
A122	FLOOR PATTERNS - 6	02/07/19
A123	FLOOR PATTERNS - 7	02/07/19
A124	FLOOR PATTERNS - 8	02/07/19
A125	FLOOR PATTERNS - 9	02/07/19
A126	FLOOR PATTERNS - 10	02/07/19
A127	FLOOR PATTERNS - 11	02/07/19
A128	FLOOR PATTERNS - 12	02/07/19
A201	EXTERIOR ELEVATIONS - 1	02/07/19
A202	EXTERIOR ELEVATIONS - 2	02/07/19
A203	EXTERIOR ELEVATIONS - 3	02/07/19
A204	BUILDING SECTIONS - 1	02/07/19
A205	BUILDING SECTIONS - 2	02/07/19
A206	BUILDING SECTIONS - 3	02/07/19
A207	BUILDING SECTIONS - 4	02/07/19
A301	WALL SECTIONS - 1	02/07/19
A302	WALL SECTIONS - 2	02/07/19
A303	WALL SECTIONS - 3	02/07/19
A304	WALL SECTIONS - 4	02/07/19
A305	SECTION DETAILS	02/07/19
A310	WEST ELEVATION AT BOONE AVENUE PANEL LAYOUT	02/07/19
A311	EAST ELEVATION AT COURTYARD PANEL LAYOUT	02/07/19

DWG. NO.	TITLE	DATE
A312	ELEVATIONS AT MIDBLOCK, ROOF PLAY AREA, PENTHOUSE & EMR - PANEL LAYOUTS	02/07/19
A313	CANOPY PLANS AND SECTIONS	02/07/19
A401	KEY PLANS - 1	02/07/19
A402	KEY PLANS - 2	02/07/19
A403	KEY PLANS - 3	02/07/19
A404	KEY PLANS - 4	02/07/19
A405	TYPICAL PRECAST PANEL CONNECTION DETAILS - 1	02/07/19
A406	TYPICAL PRECAST PANEL CONNECTION DETAILS - 2	02/07/19
A407	COLUMN DETAILS - 1	02/07/19
A408	COLUMN DETAILS - 2	02/07/19
A409	COLUMN DETAILS - 3	02/07/19
A410	COLUMN DETAILS - 4	02/07/19
A411	COLUMN DETAILS - 5	02/07/19
A412	COLUMN DETAILS - 6	02/07/19
A413	COLUMN DETAILS - 7	02/07/19
A414	COLUMN DETAILS - 8	02/07/19
A415	COLUMN DETAILS - 9	02/07/19
A416	ENLARGED PLAN DETAILS AT LOBBY AND VESTIBULE	02/07/19
A417	ENLARGED PLANS AT ROOF	02/07/19
A420	FOUNDATION & WATERPROOFING DETAILS - 1	02/07/19
A421	FOUNDATION & WATERPROOFING DETAILS - 2	02/07/19
A440	ROOF DETAILS - 1	02/07/19
A441	ROOF DETAILS - 2	02/07/19
A442	ROOF DETAILS - 3	02/07/19
A501	ELEVATOR HOISTWAY AND PIT PLANS (PE-1 & PE-2)	02/07/19
A502	ELEVATOR MACHINE ROOM PLANS (PE-1 & PE-2)	02/07/19
A503	ELEVATOR ELEVATION (SECTION VIEW "AA") (PE-1 & PE-2)	02/07/19
A504	ELEVATOR CAB DETAIL (PE-1)	02/07/19
A505	ELEVATOR ENTRANCE DETAIL (PE-1)	02/07/19
A506	ELEVATOR FIXTURE DETAIL (PE-1)	02/07/19
A510	STAIR 'A' ENLARGED PLANS	02/07/19
A511	STAIR 'B' ENLARGED PLANS	02/07/19
A512	STAIR 'C' ENLARGED PLANS	02/07/19
A513	STAIR 'A' LONGITUDINAL SECTION	02/07/19
A514	STAIR 'B' AND STAIR 'C' LONGITUDINAL SECTION	02/07/19
A515	STAIR 'A', 'B', AND 'C' CROSS SECTIONS	02/07/19

DWG. NO.	TITLE	DATE
A516	STAIR 'A' GUARDRAIL/ HANDRAIL PLANS AND ELEVATIONS - 1	02/07/19
A517	STAIR 'A' GUARDRAIL/ HANDRAIL PLANS AND ELEVATIONS - 2	02/07/19
A518	STAIR 'B' GUARDRAIL/ HANDRAIL PLANS AND ELEVATIONS	02/07/19
A519	STAIR 'C' GUARDRAIL/ HANDRAIL PLANS AND ELEVATIONS	02/07/19
A520	STAIR 'A', 'B', AND 'C' SECURITY GATE ELEVATIONS	02/07/19
A521	STAIR 'A', 'B', AND 'C' DETAILS	02/07/19
A522	STAIR DETAILS	02/07/19
A523	SERVICE RAMP PLANS AND ELEVATIONS	02/07/19
A524	FIRE HOSE VALVE CABINET SECTIONS AND DETAILS	02/07/19
A601	STUDENT TOILET ROOM PLANS, ELEVATIONS, AND SCHEDULE	02/07/19
A602	GANG STUDENT TOILET ROOM PLANS, ELEVATIONS, AND SCHEDULE	02/07/19
A603	GENDER NEUTRAL STUDENT TOILET ROOM PLANS, ELEVATIONS, AND SCHEDULE	02/07/19
A604	MEDICAL OFFICE TOILET ROOM PLANS, ELEVATIONS, AND SCHEDULE	02/07/19
A605	PRINCIPAL'S OFFICE TOILET ROOM PLANS, ELEVATIONS, AND SCHEDULE	02/07/19
A606	KITCHEN TOILET ROOM PLANS, ELEVATIONS, AND SCHEDULE	02/07/19
A607	STAFF TOILET ROOM PLANS, ELEVATIONS, AND SCHEDULE	02/07/19
A608	TEACHER'S WORKROOM TOILET ROOM PLANS, ELEVATIONS AND SCHEDULE	02/07/19
A609	PRE-KINDERGARTEN STUDENT TOILET ROOM PLANS, ELEVATIONS AND SCHEDULE	02/07/19
A610	KINDERGARTEN STUDENT TOILET ROOM PLANS, ELEVATIONS AND SCHEDULE	02/07/19
A611	CUSTODIAL LOCKER & SHOWER ROOM TOILET PLAN, ELEVATIONS, AND SCHEDULE	02/07/19
A612	TOILET PARTITION DETAILS - 1	02/07/19
A613	TOILET PARTITION DETAILS - 2	02/07/19
A701	INTERIOR PARTITION DETAILS - 1	02/07/19
A702	INTERIOR PARTITION DETAILS - 2	02/07/19
A703	FIRESTOPPING DETAILS	02/07/19
A704	INTERIOR DETAILS	02/07/19
A710	CASEWORK AND FURNITURE DETAILS - 1	02/07/19
A711	CASEWORK AND FURNITURE DETAILS - 2	02/07/19
A712	CASEWORK AND FURNITURE DETAILS - 3	02/07/19
A713	CASEWORK AND FURNITURE DETAILS - 4	02/07/19
A714	CASEWORK AND FURNITURE DETAILS - 5	02/07/19
A715	CASEWORK AND FURNITURE DETAILS - 6	02/07/19
A716	CASEWORK AND FURNITURE DETAILS - 7	02/07/19
A717	CASEWORK AND FURNITURE DETAILS - 8	02/07/19
A718	CASEWORK AND FURNITURE DETAILS - 9	02/07/19
A719	ROLL UP GRILLE DETAILS	02/07/19

DWG. NO.	TITLE	DATE
A720	AUDITORIUM STAIR DETAILS	02/07/19
A721	LIFT DETAILS	02/07/19
A722	BACK STOP DETAILS - 1	02/07/19
A723	BACK STOP DETAILS - 2	02/07/19
A724	FLAG POLE DETAILS	02/07/19
A725	WIRE MESH DETAILS - 1	02/07/19
A726	WIRE MESH DETAILS - 2	02/07/19
A727	WIRE MESH DETAILS - 3	02/07/19
A728	WIRE MESH DETAILS - 4	02/07/19
A729	TELESCOPIC BLEACHERS PLAN AND DETAILS - 1	02/07/19
A730	TELESCOPIC BLEACHERS PLAN AND DETAILS - 2	02/07/19
A731	MOTORIZED CURTAIN DETAILS - 1	02/07/19
A732	MOTORIZED CURTAIN DETAILS - 2	02/07/19
A733	MOTORIZED CURTAIN DETAILS - 3	02/07/19
A734	ENLARGED CLOSET PLAN DETAILS	02/07/19
A801	REFLECTED CEILING PLAN - CELLAR	02/07/19
A802	REFLECTED CEILING PLAN - FIRST FLOOR	02/07/19
A803	REFLECTED CEILING PLAN - SECOND FLOOR	02/07/19
A804	REFLECTED CEILING PLAN - THIRD FLOOR	02/07/19
A805	REFLECTED CEILING PLAN - FOURTH FLOOR	02/07/19
A806	REFLECTED CEILING PLAN - FIFTH FLOOR	02/07/19
A807	REFLECTED CEILING PLAN - PENTHOUSE	02/07/19
A808	CEILING DETAILS - 1	02/07/19
A809	CEILING DETAILS - 2	02/07/19
A810	CEILING DETAILS - 3	02/07/19
A901	ROOM FINISH SCHEDULE - 1	02/07/19
A902	ROOM FINISH SCHEDULE - 2	02/07/19
A903	ACOUSTICAL WOOD PANELING DETAILS - 1	02/07/19
A904	ACOUSTICAL WOOD PANELING DETAILS - 2	02/07/19
A905	ACOUSTICAL WALL PANELING DETAILS	02/07/19
A910	DOOR SCHEDULE - 1	02/07/19
A911	DOOR SCHEDULE - 2	02/07/19
A912	DOOR SCHEDULE - 3	02/07/19
A913	DOOR SCHEDULE - 4	02/07/19
A914	DOOR SCHEDULE - 5	02/07/19
A915	DOOR ELEVATIONS AND DETAILS	02/07/19

DWG. NO.	TITLE	DATE
A916	DOOR DETAILS	02/07/19
A917	ACCESS DOOR DETAILS	02/07/19
A918	DOOR SADDLE/ SILL DETAILS	02/07/19
A919	EXTERIOR DOOR DETAILS	02/07/19
A920	WINDOW SCHEDULE	02/07/19
A921	WINDOW SCHEDULE AND WINDOW TYPE ELEVATION	02/07/19
A922	WINDOW DETAILS	02/07/19
A923	INTERIOR WINDOW GUARD DETAILS	02/07/19
A924	EXTERIOR WINDOW GUARD DETAILS	02/07/19
A925	INTERIOR AND EXTERIOR STOREFRONT PLAN, ELEVATIONS, AND DETAILS	02/07/19
A926	INTERIOR AND EXTERIOR STOREFRONT DETAILS	02/07/19
A927	INTERIOR AND EXTERIOR STOREFRONT SECTION DETAILS	02/07/19
A928	GAS METER SLIDING GATE PLANS, ELEVATIONS, AND DETAILS	02/07/19
A930	SIGNAGE SCHEDULE AND DETAILS	02/07/19
A931	TYPICAL SIGNAGE DETAILS - 1	02/07/19
A932	TYPICAL SIGNAGE DETAILS - 2	02/07/19
A933	TYPICAL SIGNAGE DETAILS - 3	02/07/19
A934	TYPICAL SIGNAGE DETAILS - 4	02/07/19
A940	KITCHEN COMPLEX PLAN, ELEVATIONS, AND SCHEDULES - 1	02/07/19
A941	KITCHEN COMPLEX PLAN, ELEVATIONS, AND SCHEDULES - 2	02/07/19
A942	KITCHEN COMPLEX PLAN, ELEVATIONS, AND SCHEDULES - 3	02/07/19
A943	KITCHEN COMPLEX PLAN, ELEVATIONS, AND SCHEDULES - 4	02/07/19
A944	KITCHEN COMPLEX PLAN, ELEVATIONS, AND SCHEDULES - 5	02/07/19
A945	KITCHEN EXHAUST HOOD AND FIRE SYSTEM - 1	02/07/19
A946	KITCHEN EXHAUST HOOD AND FIRE SYSTEM - 2	02/07/19
FF&E		
FF101	FIRST FLOOR FURNITURE PLAN	02/07/19
FF102	SECOND FLOOR FURNITURE PLAN	02/07/19
FF103	THIRD FLOOR FURNITURE PLAN	02/07/19
FF104	FOURTH FLOOR FURNITURE PLAN	02/07/19
FF105	FIFTH FLOOR FURNITURE PLAN	02/07/19
FF201	TYPICAL PRE-K CLASSROOM FURNITURE PLAN, ELEVATIONS, AND SCHEDULE	02/07/19
FF202	TYPICAL KINDERGARTEN CLASSROOM FURNITURE PLAN, ELEVATIONS, AND SCHEDULE	02/07/19
FF203	TYPICAL 1ST GRADE CLASSROOM FURNITURE PLAN, ELEVATIONS, AND SCHEDULE	02/07/19
FF204	TYPICAL 2ND GRADE CLASSROOM FURNITURE PLAN, ELEVATIONS, AND SCHEDULE	02/07/19

DWG. NO.	TITLE	DATE
FF205	TYPICAL 3RD GRADE CLASSROOM FURNITURE PLAN, ELEVATIONS, AND SCHEDULE	02/07/19
FF206	TYPICAL 4TH GRADE CLASSROOM FURNITURE PLAN, ELEVATIONS, AND SCHEDULE	02/07/19
FF207	TYPICAL 5TH GRADE CLASSROOM FURNITURE PLAN, ELEVATIONS, AND SCHEDULE	02/07/19
FF208	CLASSROOM FURNITURE PLAN, ELEVATIONS, AND SCHEDULE	02/07/19
FF209	SPEECH RESOURCE ROOM FURNITURE PLAN, ELEVATIONS, AND SCHEDULE	02/07/19
FF210	READING RESOURCE ROOM FURNITURE PLAN, ELEVATIONS, AND SCHEDULE	02/07/19
FF301	LIBRARY FURNITURE PLAN, ELEVATIONS, AND SCHEDULE	02/07/19
FF302	PROJECT ROOM FURNITURE PLAN, ELEVATIONS, AND SCHEDULE	02/07/19
FF303	MUSIC ROOM FURNITURE PLAN, ELEVATIONS, AND SCHEDULE	02/07/19
FF304	EXERCISE ROOM FURNITURE PLAN, ELEVATIONS, AND SCHEDULE	02/07/19
FF305	GYMNATORIUM FURNITURE PLAN, ELEVATIONS, AND SCHEDULE - 1	02/07/19
FF306	GYMNATORIUM FURNITURE PLAN, ELEVATIONS, AND SCHEDULE - 2	02/07/19
FF307	GYMNATORIUM FURNITURE PLAN, ELEVATIONS, AND SCHEDULE – 3	02/07/19
FF308	GYMNATORIUM FURNITURE PLAN, ELEVATIONS, AND SCHEDULE – 4	02/07/19
FF309	CAFETERIA FURNITURE PLAN, ELEVATIONS, AND SCHEDULE	02/07/19
FF401	GENERAL OFFICE & WAITING AREA FURNITURE PLAN, ELEVATIONS, AND SCHEDULE	02/07/19
FF402	PRINCIPAL'S OFFICE FURNITURE PLAN, ELEVATIONS, AND SCHEDULE	02/07/19
FF403	RECORDS ROOM & SUPERVISORY FURNITURE PLAN, ELEVATIONS, AND SCHEDULE	02/07/19
FF404	MEDICAL SUITE - WAITING AREA & NURSE'S OFFICE FURNITURE PLAN, ELEVATIONS, AND SCHEDULE	02/07/19
FF405	EXAMINATION ROOM & PARENTS/ COMMUNITY ROOM FURNITURE PLANS, ELEVATIONS, AND SCHEDULE	02/07/19
FF406	GUIDANCE SUITE FURNITURE PLAN, ELEVATIONS, AND SCHEDULES - 1	02/07/19
FF407	GUIDANCE SUITE FURNITURE PLAN, ELEVATIONS, AND SCHEDULES - 2	02/07/19
FF408	STAFF LUNCH ROOM & HEALTH OFFICE FURNITURE PLAN, ELEVATIONS, AND SCHEDULE	02/07/19
FF409	TEACHER'S WORKROOM FURNITURE PLAN, ELEVATIONS, AND SCHEDULE	02/07/19
FF501	REFUSE AND RECYCLING ROOM FURNITURE PLAN, ELEVATIONS, AND SCHEDULE	02/07/19
FF502	MDF ROOM FURNITURE PLAN, ELEVATIONS, AND SCHEDULE	02/07/19
FF503	TELECOMMUNICATIONS SWITCH CLOSET FURNITURE PLAN, ELEVATIONS, AND SCHEDULE	02/07/19
FF504	CUSTODIAL OFFICE FURNITURE PLAN, ELEVATIONS, AND SCHEDULE	02/07/19
FF505	CUSTODIAL WORKSHOP FURNITURE PLAN, ELEVATIONS, AND SCHEDULE	02/07/19
FF506	JANITOR'S CLOSET FURNITURE PLAN, ELEVATIONS, AND SCHEDULE	02/07/19
FF507	GROUNDS EQUIPMENT STOREROOM FURNITURE PLAN, ELEVATIONS, AND SCHEDULE	02/07/19
FF508	GYM EQUIPMENT STORAGE ROOM FURNITURE PLAN, ELEVATIONS, AND SCHEDULE	02/07/19

DWG. NO.	TITLE	DATE
FF509	GENERAL STORAGE ROOM FURNITURE PLAN, ELEVATIONS, AND SCHEDULE	02/07/19
FF601	CELLAR FLOOR CORRIDOR FURNITURE PLAN, ELEVATIONS, AND SCHEDULE - 1	02/07/19
FF602	CELLAR FLOOR CORRIDOR FURNITURE PLAN, ELEVATIONS, AND SCHEDULE - 2	02/07/19
FF603	FIRST FLOOR CORRIDOR FURNITURE PLAN, ELEVATIONS, AND SCHEDULE - 1	02/07/19
FF604	FIRST FLOOR CORRIDOR FURNITURE PLAN, ELEVATIONS, AND SCHEDULE – 2	02/07/19
FF605	FIRST FLOOR CORRIDOR FURNITURE PLAN, ELEVATIONS, AND SCHEDULE - 3	02/07/19
FF606	SECOND FLOOR CORRIDOR FURNITURE PLAN, ELEVATIONS, AND SCHEDULE - 1	02/07/19
FF607	SECOND FLOOR CORRIDOR FURNITURE PLAN, ELEVATIONS, AND SCHEDULE - 2	02/07/19
FF608	THIRD FLOOR CORRIDOR FURNITURE PLAN, ELEVATIONS, AND SCHEDULE - 1	02/07/19
FF609	THIRD FLOOR CORRIDOR FURNITURE PLAN, ELEVATIONS, AND SCHEDULE - 2	02/07/19
FF610	FOURTH FLOOR CORRIDOR FURNITURE PLAN, ELEVATIONS, AND SCHEDULE - 1	02/07/19
FF611	FOURTH FLOOR CORRIDOR FURNITURE PLAN, ELEVATIONS, AND SCHEDULE - 2	02/07/19
FF612	FIFTH FLOOR CORRIDOR FURNITURE PLAN, ELEVATIONS, AND SCHEDULE - 1	02/07/19
FF613	FIFTH FLOOR CORRIDOR FURNITURE PLAN, ELEVATIONS, AND SCHEDULE - 2	02/07/19

VOLUME 02

DWG. NO.	TITLE	DATE
TITLE / COVER SHEETS		
T001	COVER SHEET	02/07/19
T002	LIST OF DRAWINGS - 1	02/07/19
T003	LIST OF DRAWINGS - 2	02/07/19
T004	LIST OF DRAWINGS - 3	02/07/19
STRUCTURAL		
FO001	FOUNDATION & SITEWORK GENERAL NOTES	02/07/19
FO100	FOUNDATION PLAN	02/07/19
FO201	FOUNDATION SECTIONS SHEET 1	02/07/19
FO202	FOUNDATION SECTIONS SHEET 2	02/07/19
FO203	FOUNDATION SECTIONS SHEET 3	02/07/19
FO301	FOOTING, STRAP BEAM & GRADE BEAM SCHEDULES	02/07/19
FO401	FOUNDATION TYPICAL DETAILS SHEET 1	02/07/19
FO402	FOUNDATION TYPICAL DETAILS SHEET 2	02/07/19
FO403	FOUNDATION TYPICAL DETAILS SHEET 3	02/07/19
FO404	FOUNDATION TYPICAL DETAILS SHEET 4	02/07/19
S001	GENERAL NOTES - SHEET 1	02/07/19
S002	GENERAL NOTES - SHEET 2	02/07/19
S101	FIRST FLOOR FRAMING PLAN	02/07/19
S102	SECOND FLOOR FRAMING PLAN	02/07/19
S103	THIRD FLOOR FRAMING PLAN	02/07/19
S104	FOURTH FLOOR FRAMING PLAN	02/07/19
S105	FIFTH FLOOR FRAMING PLAN	02/07/19
S106	ROOF FRAMING PLAN	02/07/19
S107	ROOF DUNNAGE PLAN	02/07/19
S108	PENTHOUSE ROOF FRAMING PLAN	02/07/19
S201	CONCRETE SUPERSTRUCTURE SECTIONS SHEET	02/07/19
S210	STEEL SUPERSTRUCTURE SECTIONS SHEET 1	02/07/19
S211	STEEL SUPERSTRUCTURE SECTIONS SHEET 2	02/07/19
S212	STEEL SUPERSTRUCTURE SECTIONS SHEET 3	02/07/19
S301	CONCRETE COLUMN SCHEDULE	02/07/19
S302	TYPICAL CONCRETE COLUMN DETAILS SHEET 1	02/07/19
S304	STEEL COLUMN SCHEDULE	02/07/19
S305	TYPICAL STEEL COLUMN DETAILS	02/07/19

DWG. NO.	TITLE	DATE
S310	TRUSS ELEVATIONS - SHEET 1	02/07/19
S311	TRUSS ELEVATIONS - SHEET 2	02/07/19
S312	TRUSS CONNECTION DETAILS	02/07/19
S320	PUNCHING SHEAR REINFORCEMENT DETAILS	02/07/19
S350	SHEARWALL TYPICAL DETAILS	02/07/19
S351	SHEARWALL REINFORCEMENT PLANS	02/07/19
S352	SHEARWALL ELEVATION SHEET	02/07/19
S401	CONCRETE SUPERSTRUCTURE TYPICAL DETAILS - SHEET 1	02/07/19
S402	CONCRETE SUPERSTRUCTURE TYPICAL DETAILS - SHEET 2	02/07/19
S403	CONCRETE SUPERSTRUCTURE TYPICAL DETAILS - SHEET 3	02/07/19
S404	CONCRETE SUPERSTRUCTURE TYPICAL DETAILS - SHEET 4	02/07/19
S410	STEEL SUPERSTRUCTURE TYPICAL DETAILS - SHEET 1	02/07/19
S411	STEEL SUPERSTRUCTURE TYPICAL DETAILS - SHEET 2	02/07/19
S412	STEEL SUPERSTRUCTURE TYPICAL DETAILS - SHEET 3	02/07/19
S413	STEEL SUPERSTRUCTURE TYPICAL DETAILS - SHEET 4	02/07/19
S414	STEEL SUPERSTRUCTURE TYPICAL DETAILS - SHEET 5	02/07/19
S415	STEEL SUPERSTRUCTURE TYPICAL DETAILS - SHEET 6	02/07/19
S420	MASONRY TYPICAL DETAILS SHEET 1	02/07/19
S421	MASONRY TYPICAL DETAILS SHEET 2	02/07/19
S422	MASONRY TYPICAL DETAILS SHEET 3	02/07/19
MECHANICAL		
M001	HVAC SYMBOLS, NOTES, AND PARAMETERS	02/07/19
M002	HVAC ABBREVIATIONS AND SYMBOLS	02/07/19
M003	HVAC SCHEDULE SHEETS #1	02/07/19
M004	HVAC SCHEDULE SHEETS #2	02/07/19
M005	HVAC SCHEDULE SHEETS #3	02/07/19
M006	HVAC SCHEDULE SHEETS #4	02/07/19
M101	HVAC CELLAR PLAN	02/07/19
M102	HVAC FIRST FLOOR PLAN	02/07/19
M103	HVAC SECOND FLOOR PLAN	02/07/19
M104	HVAC THIRD FLOOR PLAN	02/07/19
M105	HVAC FOURTH FLOOR PLAN	02/07/19
M106	HVAC FIFTH FLOOR PLAN	02/07/19
M107	HVAC ROOF PLAN	02/07/19
M108	HVAC UPPER ROOF PLAN	02/07/19
M201	HVAC PIPING CELLAR FLOOR PLAN	02/07/19

DWG. NO.	TITLE	DATE
M202	HVAC PIPING FIRST FLOOR PLAN	02/07/19
M203	HVAC PIPING SECOND FLOOR PLAN	02/07/19
M204	HVAC PIPING THIRD FLOOR PLAN	02/07/19
M205	HVAC PIPING FOURTH FLOOR PLAN	02/07/19
M206	HVAC PIPING FIFTH FLOOR PLAN	02/07/19
M207	HVAC PIPING ROOF FLOOR PLAN	02/07/19
M301	HVAC MECHANICAL ROOM PART PLAN	02/07/19
M302	HVAC MECHANICAL ROOM PART PLAN NOTES AND DIAGRAMS	02/07/19
M303	HVAC SECTION SHEET #1	02/07/19
M304	HVAC SECTION SHEET #2	02/07/19
M401	HVAC AIR RISER DIAGRAM	02/07/19
M402	HVAC HOT WATER FLOW DIAGRAM	02/07/19
M403	HVAC CHILLED WATER FLOW DIAGRAM	02/07/19
M404	HVAC LONWORKS SYSTEM CONTROL ARCHITECTURE DIAGRAM	02/07/19
M405	HVAC LONWORKS SYSTEM CONTROL PANEL	02/07/19
M406	HVAC AUTOMATIC TEMPERATURE CONTROL DIAGRAM SHEET #1	02/07/19
M407	HVAC AUTOMATIC TEMPERATURE CONTROL DIAGRAM SHEET #2	02/07/19
M408	HVAC AUTOMATIC TEMPERATURE CONTROL DIAGRAM SHEET #3	02/07/19
M410	HVAC AUTOMATIC TEMPERATURE CONTROL DIAGRAM SHEET #5	02/07/19
M411	HVAC AUTOMATIC TEMPERATURE CONTROL DIAGRAM SHEET #6	02/07/19
M412	HVAC AUTOMATIC TEMPERATURE CONTROL DIAGRAM SHEET #7	02/07/19
M413	HVAC AUTOMATIC TEMPERATURE CONTROL DIAGRAM SHEET #8	02/07/19
M414	HVAC AUTOMATIC TEMPERATURE CONTROL DIAGRAM SHEET #9	02/07/19
M415	HVAC AUTOMATIC TEMPERATURE CONTROL DIAGRAM SHEET #10	02/07/19
M416	HVAC AUTOMATIC TEMPERATURE CONTROL DIAGRAM SHEET #11	02/07/19
M501	HVAC DETAILS SHEET #1	02/07/19
M502	HVAC DETAILS SHEET #2	02/07/19
M503	HVAC DETAILS SHEET #3	02/07/19
M504	HVAC DETAILS SHEET #4	02/07/19
M505	HVAC DETAILS SHEET #5	02/07/19
M506	HVAC DETAILS SHEET #6	02/07/19
M507	HVAC DETAILS SHEET #7	02/07/19
FIRE PROTECTION/ SPRINKLER		
F001	FIRE PROTECTION - SYMBOLS, ABBREVIATIONS, AND NOTES	02/07/19
F002	FIRE PROTECTION - GENERAL NOTES	02/07/19
F020	FIRE PROTECTION - SITE PLAN	02/07/19

DWG. NO.	TITLE	DATE
F101	FIRE PROTECTION - CELLAR FLOOR PLAN	02/07/19
F102	FIRE PROTECTION - FIRST FLOOR PLAN	02/07/19
F103	FIRE PROTECTION - SECOND FLOOR PLAN	02/07/19
F104	FIRE PROTECTION - THIRD FLOOR PLAN	02/07/19
F105	FIRE PROTECTION - FOURTH FLOOR PLAN	02/07/19
F106	FIRE PROTECTION - FIFTH FLOOR PLAN	02/07/19
F107	FIRE PROTECTION - PENTHOUSE FLOOR PLAN	02/07/19
F201	FIRE PROTECTION - SPRINKLER AND STANDPIPE RISER DIAGRAMS	02/07/19
F301	FIRE PROTECTION - DETAILS SHEET (1 OF 3)	02/07/19
F302	FIRE PROTECTION - DETAILS SHEET (2 OF 3)	02/07/19
F303	FIRE PROTECTION - DETAILS SHEET (3 OF 3)	02/07/19
PLUMBING		
P001	PLUMBING - SYMBOLS, ABBREVIATIONS, AND NOTES	02/07/19
P002	PLUMBING - SCHEDULES	02/07/19
P020	PLUMBING - SITE PLAN	02/07/19
P101	PLUMBING - CELLAR FLOOR PLAN	02/07/19
P102	PLUMBING - FIRST FLOOR PLAN	02/07/19
P103	PLUMBING - SECOND FLOOR PLAN	02/07/19
P104	PLUMBING - THIRD FLOOR PLAN	02/07/19
P105	PLUMBING - FOURTH FLOOR PLAN	02/07/19
P106	PLUMBING - FIFTH FLOOR PLAN	02/07/19
P107	PLUMBING - ROOF FLOOR PLAN	02/07/19
P108	PLUMBING - PENTHOUSE ROOF PLAN	02/07/19
P201	PLUMBING - KITCHEN PART PLAN	02/07/19
P202	PLUMBING - MECHANICAL ROOM AND WATER SERVICE ROOM PART PLANS	02/07/19
P301	PLUMBING - DOMESTIC WATER RISER DIAGRAM	02/07/19
P302	PLUMBING - SANITARY RISER DIAGRAM	02/07/19
P303	PLUMBING - STORM RISER DIAGRAM	02/07/19
P304	PLUMBING - GAS RISER DIAGRAM	02/07/19
P305	PLUMBING - KITCHEN DOMESTIC WATER AND SANITARY RISER DIAGRAMS	02/07/19
P401	PLUMBING - DETAILS SHEET (1 OF 6)	02/07/19
P402	PLUMBING - DETAILS SHEET (2 OF 6)	02/07/19
P403	PLUMBING - DETAILS SHEET (3 OF 6)	02/07/19
P404	PLUMBING - DETAILS SHEET (4 OF 6)	02/07/19
P405	PLUMBING - DETAILS SHEET (5 OF 6)	02/07/19
P406	PLUMBING - DETAILS SHEET (6 OF 6)	02/07/19

DWG. NO.	TITLE	DATE
	ELECTRICAL	
E001	ELECTRICAL SYMBOLS, ABBREVIATIONS, AND NOTES	02/07/19
E002	SITE AND SERVICE PLAN	02/07/19
E003	GROUNDING SYSTEM	02/07/19
E101	CELLAR LIGHTING PLAN	02/07/19
E102	FIRST FLOOR LIGHTING PLAN	02/07/19
E103	SECOND FLOOR LIGHTING PLAN	02/07/19
E104	THIRD FLOOR LIGHTING PLAN	02/07/19
E105	FOURTH FLOOR LIGHTING PLAN	02/07/19
E106	FIFTH FLOOR LIGHTING PLAN	02/07/19
E107	ROOF LIGHTING PLAN	02/07/19
E201	CELLAR POWER PLAN	02/07/19
E202	FIRST FLOOR POWER PLAN	02/07/19
E203	SECOND FLOOR POWER PLAN	02/07/19
E204	THIRD FLOOR POWER PLAN	02/07/19
E205	FOURTH FLOOR POWER PLAN	02/07/19
E206	FIFTH FLOOR POWER PLAN	02/07/19
E207	ROOF POWER PLAN	02/07/19
E301	CELLAR LOW VOLTAGE SYSTEMS PLAN	02/07/19
E302	FIRST FLOOR LOW VOLTAGE SYSTEMS PLAN	02/07/19
E303	SECOND FLOOR LOW VOLTAGE SYSTEMS PLAN	02/07/19
E304	THIRD FLOOR LOW VOLTAGE SYSTEMS PLAN	02/07/19
E305	FOURTH FLOOR LOW VOLTAGE SYSTEMS PLAN	02/07/19
E306	FIFTH FLOOR LOW VOLTAGE SYSTEMS PLAN	02/07/19
E307	ROOF LOW VOLTAGE SYSTEMS PLAN	02/07/19
E401	ELECTRICAL TELECOM ROOM PART PLANS	02/07/19
E402	ELECTRICAL KITCHEN PART PLAN	02/07/19
E403	ELECTRICAL BOILER ROOM PART PLAN	02/07/19
E404	STAIR LIGHTING RISER DIAGRAMS	02/07/19
E411	CELLAR CONDUIT ROUTING PLAN	02/07/19
E412	FIRST FLOOR CONDUIT ROUTING PLAN	02/07/19
E413	SECOND FLOOR CONDUIT ROUTING PLAN	02/07/19
E414	THIRD FLOOR CONDUIT ROUTING PLAN	02/07/19
E415	FOURTH FLOOR CONDUIT ROUTING PLAN	02/07/19
E416	FIFTH FLOOR CONDUIT ROUTING PLAN	02/07/19
E417	ROOF CONDUIT ROUTING PLAN	02/07/19

DWG. NO.	TITLE	DATE
E501	SINGLE LINE DIAGRAM	02/07/19
E502	POWER RISER DIAGRAM	02/07/19
E503	TELEPHONE AND DATA RISER DIAGRAM	02/07/19
E504	SOUND/CLOCK AND TASS RISER DIAGRAM	02/07/19
E505	IPDVS SYSTEM RISER DIAGRAM	02/07/19
E506	INTRUSION ALARM SYSTEM RISER DIAGRAM	02/07/19
E507	AUXILIARY SIGNAL AND FIRE RESCUE INTERCOM SYSTEM RISER DIAGRAMS	02/07/19
E508	LIGHTING CONTROL SYSTEM RISER DIAGRAM	02/07/19
E601	ELECTRICAL SCHEDULES SHEET 01 OF 06	02/07/19
E602	ELECTRICAL SCHEDULES SHEET 02 OF 06	02/07/19
E603	ELECTRICAL SCHEDULES SHEET 03 OF 06	02/07/19
E604	ELECTRICAL SCHEDULES SHEET 04 OF 06	02/07/19
E605	ELECTRICAL SCHEDULES SHEET 05 OF 06	02/07/19
E606	ELECTRICAL SCHEDULES SHEET 06 OF 06	02/07/19
E701	ELECTRICAL DETAILS SHEET 01 OF 08	02/07/19
E702	ELECTRICAL DETAILS SHEET 02 OF 08	02/07/19
E703	ELECTRICAL DETAILS SHEET 03 OF 08	02/07/19
E704	ELECTRICAL DETAILS SHEET 04 OF 08	02/07/19
E705	ELECTRICAL DETAILS SHEET 05 OF 08	02/07/19
E706	ELECTRICAL DETAILS SHEET 06 OF 08	02/07/19
E707	ELECTRICAL DETAILS SHEET 07 OF 08	02/07/19
E708	ELECTRICAL DETAILS SHEET 08 OF 08	02/07/19
FIRE ALARM		
FA001	FIRE ALARM SYMBOLS, ABBREVIATIONS, AND NOTES	02/07/19
FA002	FIRE ALARM SEQUENCE OF OPERATIONS AND MATRIX	02/07/19
FA101	CELLAR FIRE ALARM PLAN	02/07/19
FA102	FIRST FLOOR FIRE ALARM PLAN	02/07/19
FA103	SECOND FLOOR FIRE ALARM PLAN	02/07/19
FA104	THIRD FLOOR FIRE ALARM PLAN	02/07/19
FA105	FOURTH FLOOR FIRE ALARM PLAN	02/07/19
FIRE ALARM (CONTINUED)		
FA106	FIFTH FLOOR FIRE ALARM PLAN	02/07/19
FA107	ROOF FLOOR FIRE ALARM PLAN	02/07/19
FA201	FIRE ALARM SYSTEM RISER DIAGRAM	02/07/19
FA401	FIRE ALARM DETAILS	02/07/19

END OF LIST OF DRAWINGS

* * *

This page intentionally left blank.

ENERGY MODEL REPORT

DESIGN DEVELOPMENT SUBMISSION - 100%

P.S. 320X - NEW BUILDING

LLW No. 107404

- Energy Model Report 287
- eQuest Model Review Checklist Level 1 303
- eQuest Model Review Checklist Level 2.....3073
- eQuest Baseline Output-Inpput.....315
- eQuest Summary Input Report LV-G.....355
- eQuest Summary Input Proposed.....391

This page intentionally left blank.

Supporting Documentations:

E 4.1P, E5.1R, A3.2

Energy Model Report, Baseline Input-Output and Checklist in the Supporting

1570 Boone Avenue

Bronx, NY 10460

Assessment of Energy Performance for
Compliance with NYC SCA Green School Guide

100% Submission update Revision 1

April 2, 2019

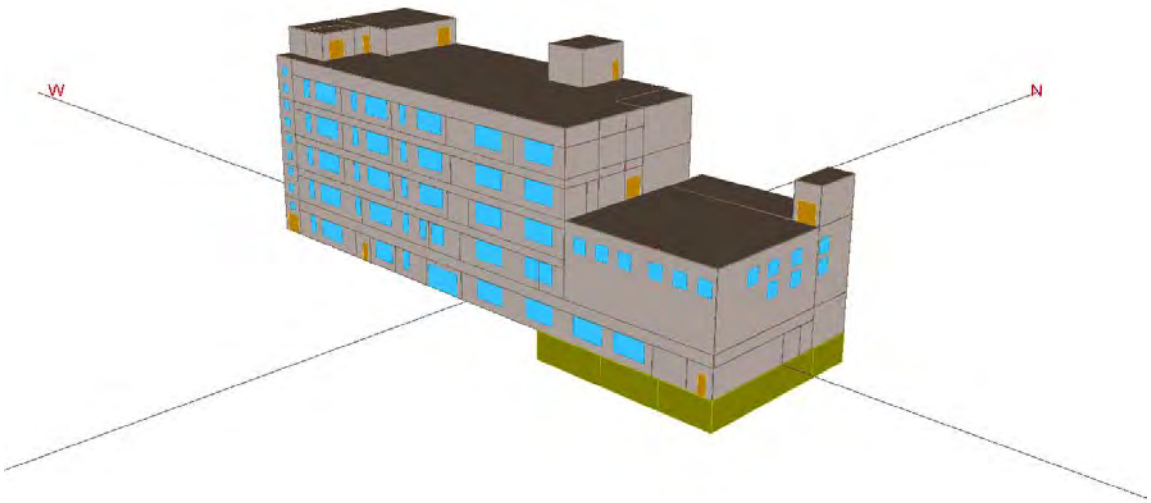

Project Narrative

Lilker EMO Energy Solutions analyzed the energy performance of the proposed new construction of Public School 320X located in Bronx, NY. The Proposed Design is a 5 story, 54,800 ft^2 primary school. The building includes classrooms, offices, a gymnatorium, a cafeteria with kitchen, and a variety of support spaces. The energy model is based on the 100% Submission drawing set dated September 21, 2018, with mechanical drawing set dated January 25, 2019.

Lilker EMO performed energy modeling for compliance with the NYC SCA Green School Guide System. NYC SCA GSG allows compliance using the Appendix G Method of ASHRAE/IESNA Standard 90.1-2010 (ASHRAE 90.1-10G). In addition, Lilker EMO analyzed the performance of the Proposed Design in respect to New York City Local Law 86 (LL86). LL86 mandates 20% regulated

energy cost savings[1] for projects with more than $12 Million construction cost. Compliance with LL86 is demonstrated against the Energy Cost Budget Method of ASHRAE/IESNA Standard 90.1-2013 (ASHRAE 90.1-13).

The results are summarized in Table 1 below. The project achieves **35.05%** savings in energy costs compared to the GSG baseline. The project is in compliance with the minimum requirements of E4.1R –Minimum Energy Performance (E4.1R). The minimum energy cost reduction required to meet the prerequisite is 5% using ASHRAE 90.1-2010 PRM as a baseline.

In addition, the project achieves **31.2%** savings in regulated energy costs compared with the LL86 Baseline. The project is in compliance with the LL86 requirements.

The energy model was developed for the sole purpose for documenting compliance with the SCA GSG E4.1R requirements and should not be used for predicting the actual energy use of the building. Actual energy use and cost will be greater, since the modeling rules do not account for many real-life issues, such as quality of construction, equipment functionality, building operation and other factors. Please refer to the end of the report for details.

Table 1 Energy Modeling Results for Proposed Design; GSG Baseline and energy efficiency measures (EEMs)

Description	Annual Energy Cost	Energy Cost Savings	% Energy Cost Savings	NYC SCA GSG Compliance
SCA GSG Baseline: ASHRAE 90.1-2010 Appendix G	$126,346	-	-	-
Proposed Design	$82,060	$44,286	35.05%	Yes

	Electric Use (kWh)	Peak KW	Electric Cost	Gas Use (Therms)	Gas Cost
SCA Baseline: ASHRAE 90.1-2010 Appendix G	452,670	285	$119,618	6,051	$6,728
Proposed Design	280,860	189	$75,069	6,288	$6,991

[1] Note: Regulated energy excludes the energy consumed by equipment that is typically plugged into receptacles: computers, printers, copiers, TVs, radios, electric clocks, etc. It also excludes energy used by elevators and escalators, cooking equipment and process equipment (such as industrial or laboratory equipment).

Table 2 Energy Modeling Results for Proposed Design; LL86 Baseline and energy efficiency measures (EEMs)

Description	Annual Energy Cost	Annual Regulated Energy Costs	Regulated Energy Cost Savings	% Regulated Energy Cost Savings	LL86 Compliance
NYC LL86 Baseline: ASHRAE 90.1-2013 ECB	$107,209	$80,680	-	-	-
Proposed Design	$82,060	$55,531	$25,121	31.2%	Yes

	LL86 Baseline	Proposed Design
Total Annual Electric Use (kWh)	373,402	280,860
Regulated Annual Electric Use (kWh)	248,175	155,633
Peak Total Demand (kW)	258	189
Peak Regulated Demand (kW)	213	144
Sum of Regulated Monthly Peak Demands (kW)	1,638	1,099
Total Gas Use (Therms)	6,226	6,288
Regulated/Heating Gas Use (Therms)	5,841	5,903

Details for Energy Simulation

Lilker EMO used the computer software eQuest (a DOE-2.2 based modeling tool) to model the building design and evaluate energy efficiency measures. DOE-2.2 is a computer program for detailed energy use analysis of residential and commercial buildings. It was developed by Lawrence Berkeley Laboratories, in collaboration with the U.S. Department of Energy and other research groups. DOE-2.2 calculates the hour-by-hour energy use of a building based on information on the building's location, construction, HVAC systems, central plant, occupancy, and operation.

The project is located in the Bronx, NY, which is in ASHRAE Climate Zone 4A per ASHRAE 90.1 Table B-1. Per ASHRAE 90.1 Table D-1, the design conditions are wet bulb temperature of 73°F, HDD65 of 4,910 and CDD50 of 3,547. The analysis was based on climatic data for LaGuardia Airport in New York City, using a TMY3 bin weather file. The envelope of the SCA GSG Baseline is modeled to meet the requirements prescribed in Table 5.5-4 of ASHRAE 90.1-2010.

The utility rates used for the SCA Baseline and the Proposed Design are based on LL86 energy rates for FY 2012 published by Mayor's Office of Environmental Coordination (MOEC). The electricity rate for NYPA Electric Public Schools consists of a demand charge of $30.64 /kW and energy charge of $0.0910/kWh. The natural gas rate for NYPA Gas, Firm-heating is $1.1117/therm.

Building Energy Efficiency Measures included in the Design

1. *Reduced Interior Lighting Power*

The Proposed Design Energy model utilized the lighting power densities based on the lighting take-offs from the electrical lighting plans and schedules for 100% DD. The lighting demand is over 60% better than ASHRAE 90.1-2010, using the space-by-space method.

2. *Condensing Boilers*

Gas-fired condensing boilers are part of the Proposed Design allowing for significant energy savings relative to conventional boiler versions. The condensing boilers have been modeled at 90% heating efficiency when operating in condensing mode.

3. *Baseboard Heating*

The proposed design provides heating via baseboard radiators. This eliminates night cycle use of the rooftop units. This hydronic perimeter heating system of the Proposed model also allows reducing the air supply to minimum ventilation requirements, thereby minimizing the fan use during winter occupied hours.

4. *Chilled Water-based Design*

The chilled water-based cooling system provide significant performance improvement over its direct expansion counterpart that is implemented in the Baseline model.

Side-by-Side Comparison between Proposed Design, SCA GSG Baseline, and LL86

	Proposed Design	SCA GSG Baseline ASHRAE 90.1-2010 App. G	LL86 Baseline ASHRAE 90.1-2013 ECBM
Climate	Bronx, NY- ASHRAE Climate Zone 4A	ASHRAE Climate Zone 4A	ASHRAE Climate Zone 4A
Exterior Wall Construction	ThermoMass precast wall system • 3" concrete + 1" concrete finishing • 3" thick rigid insulation (R-15) • 4" concrete • U-factor = 0.053 Btu/(h-ft^2-F)	Steel Framed Walls • U-factor = 0.064 Btu/(h-ft^2-F)	Mass Walls • U-factor = 0.104 Btu/(h-ft^2-F)
Vertical Fenestration	Vision Glass Area: 11.9% of Total Wall Area • Type: Fixed Aluminum Windows • U-factor$_{unit}$ = 0.403 Btu/h-ft^2-F (Average overall assembly U) • Solar Heat Gain Coefficient = 0.38 • Visible Transmittance = 0.68 • Type: Entrance Doors with >50% glazed area • U-factor$_{unit}$ = 0.77 Btu/h-ft^2-F • Solar Heat Gain Coefficient = 0.39 • Visible Transmittance = 0.68	Vision Glass Area: 11.9% of Total Wall Area • Type: Metal Framing- All Other • U-factor$_{unit}$ =0.55 • Solar Heat Gain Coefficient= 0.4 • Visible transmittance = 0.44 • Type: Entrance Doors with >50% glazed area • U-factor$_{unit}$ = 0.85 Btu/h-ft^2-F • Solar Heat Gain Coefficient = 0.39 • Visible Transmittance = 0.44	Vision Glass Area: 11.9% of Total Wall Area • Type: Metal Framing, Fixed: • U-factor$_{unit}$ =0.42 • Solar Heat Gain Coefficient= 0.4 • Visible transmittance = 44% • Type: Entrance Doors with >50% glazed area • U-factor$_{unit}$ = 0.77 Btu/h-ft^2-F • Solar Heat Gain Coefficient = 0.39 • Visible Transmittance = 0.44
Below-Grade Wall Construction	Below-Grade Walls • R-10 insulation • C-factor = 0.116 Btu/(h-ft^2-F)	Below-Grade Walls • C-factor = 1.140 Btu/(h-ft^2-F)	Below-Grade Walls • C-factor = 1.140 Btu/(h-ft^2-F)
Roof Construction	Typical Roof Construction • Roofing membrane • 6" thick rigid insulation (R-30) • 12" slab on the main roof; 7" slab over the gym • U-factor = 0.032 Btu/(h-ft^2-F)	Typical Roof Construction • 2" Stone paver • R-20 Continuous Insulation • 10" Roof slab • U-factor = 0.048 Btu/(h-ft^2-F)	Typical Roof Construction • U-factor = 0.032 Btu/(h-ft^2-F)

	Proposed Design	SCA GSG Baseline ASHRAE 90.1-2010 App. G	LL86 Baseline ASHRAE 90.1-2013 ECBM
Opaque Doors	Swinging Door • U-factor = 0.6 Btu/(h-ft^2-F)	Swinging Door • U-factor = 0.7 Btu/(h-ft^2-F)	Swinging Door • U-factor = 0.5 Btu/(h-ft^2-F)
Interior Lighting	The lighting power densities for the Proposed model are based on lighting take-offs from the 100% Submission lighting plans (E101 through E107) and lighting fixture schedules (E601) dated 9/21/2018. The GSG Baseline LPDs are according to "eQuest Input Summary for SCA Prototypical Model", Table 6 Lighting Power Density by Space Type.		

	Proposed Case LPD (w/sf)		GSG Baseline LPD (w/sf)		LL86 Baseline LPD (w/sf)	
Interior lighting: space by space LPD	STRS C-C	0.15	STRS C-C	0.69	STRS C-C	0.66
	STRS B-C	0.24	STRS B-C	0.69	STRS B-C	0.66
	WATER C01	0.24	WATER C01	0.95	WATER C01	0.42
	ELEC C02	0.29	ELEC C02	0.95	ELEC C02	0.42
	CORR Cellar	0.19	CORR Cellar	0.66	CORR Cellar	0.63
	STRS A-1	0.48	STRS A-1	0.69	STRS A-1	0.66
	CR 102	0.3	CR 102	1.12	CR 102	1.12
	STOR 103	0.39	STOR 103	0.57	STOR 103	0.57
	OFF 104	0.62	OFF 104	1.12	OFF 104	1.12
	OFF 106	0.62	OFF 106	1.12	OFF 106	1.12
	V-1	0.49	V-1	0.66	V-1	0.63
	Caf 108	0.3	Caf 108	0.65	Caf 108	0.65
	RR 108	0.3	RR 108	0.98	RR 108	0.88
	CORR-BOH	0.42	CORR-BOH	0.66	CORR-BOH	0.63
	RR 115	0.43	RR 115	0.98	RR 115	0.88
	STRS C-1	0.47	STRS C-1	0.69	STRS C-1	0.66
	STOR 115	0.58	STOR 115	0.57	STOR 115	0.57
	KITCH 115	0.5	KITCH 115	0.99	KITCH 115	1.21
	STRS B-1	0.16	STRS B-1	0.69	STRS B-1	0.66
	MTNG 109	0.54	MTNG 109	1.11	MTNG 109	1.11
	Nurse 107	0.66	Nurse 107	1.12	Nurse 107	1.12
	CR 105	0.32	CR 105	1.12	CR 105	1.12
	RRs 101,3,5	0.51	RRs 101,3,5	0.98	RRs 101,3,5	0.88
	CR 101	0.3	CR 101	1.12	CR 101	1.12
	CORR-CR	0.37	CORR-CR	0.66	CORR-CR	0.63
	RR 102,4	0.52	RR 102,4	0.98	RR 102,4	0.88
	JC 113	0.46	JC 113	0.57	JC 113	0.57
	STOR 111	0.41	STOR 111	0.57	STOR 111	0.57
	STOR 112	0.59	STOR 112	0.57	STOR 112	0.57
	LCKR 115	0.48	LCKR 115	0.68	LCKR 115	0.68
	LOBBY	1.14	LOBBY	0.66	LOBBY	0.63
	CORR Elev	0.28	CORR Elev	0.66	CORR Elev	0.63
	STRS A-2	0.48	STRS A-2	0.69	STRS A-2	0.66

	STRS B-2	0.14	STRS B-2	0.69	STRS B-2	0.66
	STRS C-2	0.47	STRS C-2	0.69	STRS C-2	0.66
	CR 202	0.32	CR 202	1.12	CR 202	1.12
	CR 204	0.32	CR 204	1.12	CR 204	1.12
	CR 206	0.91	CR 206	1.12	CR 206	1.12
	CR 210	0.31	CR 210	1.12	CR 210	1.12
	OFF 216	0.51	OFF 216	1.12	OFF 216	1.12
	GYM 216	0.33	GYM 216	1.2	GYM 216	1.2
	STAGE 216	0.57	STAGE 216	1.2	STAGE 216	1.2
	RR JC 2	0.4	RR JC 2	0.98	RR JC 2	0.88
	CR 201	0.31	CR 201	1.12	CR 201	1.12
	CR 203	0.31	CR 203	1.12	CR 203	1.12
	CR 205	0.32	CR 205	1.12	CR 205	1.12
	STOR 207	0.39	STOR 207	0.57	STOR 207	0.57
	IDF 209	0.49	IDF 209	0.95	IDF 209	0.42
	RR 211	0.58	RR 211	0.98	RR 211	0.88
	STOR 212	0.56	STOR 212	0.57	STOR 212	0.57
	RR 208-210	0.49	RR 208-210	0.98	RR 208-210	0.88
	RR 202 204	0.62	RR 202 204	0.98	RR 202 204	0.88
	CORR-2	0.33	CORR-2	0.66	CORR-2	0.63
	STRS A-3	0.32	STRS A-3	0.69	STRS A-3	0.66
	STRS B-3	0.14	STRS B-3	0.69	STRS B-3	0.66
	RR JC 3	0.4	RR JC 3	0.98	RR JC 3	0.88
	RR 309	0.58	RR 309	0.98	RR 309	0.88
	CORR-3	0.33	CORR-3	0.66	CORR-3	0.63
	CR 302	0.28	CR 302	1.12	CR 302	1.12
	CR 304	0.31	CR 304	1.12	CR 304	1.12
	CR 306	0.31	CR 306	1.12	CR 306	1.12
	EXERCISE 310	0.29	EXERCISE 310	1.2	EXERCISE 310	1.2
	OFF 308	0.65	OFF 308	1.12	OFF 308	1.12
	CR 301	0.31	CR 301	1.12	CR 301	1.12
	CR 303	0.31	CR 303	1.12	CR 303	1.12
	CR 305	0.32	CR 305	1.12	CR 305	1.12
	STOR 307	0.41	STOR 307	0.57	STOR 307	0.57

	STRS A-4	0.32	STRS A-4	0.69	STRS A-4	0.66
	STRS B-4	0.14	STRS B-4	0.69	STRS B-4	0.66
	STRS C-4	0.47	STRS C-4	0.69	STRS C-4	0.66
	CR 402	0.28	CR 402	1.12	CR 402	1.12
	CR 404	0.31	CR 404	1.12	CR 404	1.12
	CR 406	0.29	CR 406	1.12	CR 406	1.12
	RR JC 4	0.4	RR JC 4	0.98	RR JC 4	0.88
	RR 413	0.7	RR 413	0.98	RR 413	0.88
	MDF 411	0.33	MDF 411	0.95	MDF 411	0.42
	CORR-4	0.33	CORR-4	0.66	CORR-4	0.63
	PROJECT 408	0.28	PROJECT 408	1.11	PROJECT 408	1.11
	STOR 410	0.31	STOR 410	0.57	STOR 410	0.57
	STOR 409	0.31	STOR 409	0.57	STOR 409	0.57
	OFF 407	0.65	OFF 407	1.12	OFF 407	1.12
	CR 405	0.58	CR 405	1.12	CR 405	1.12
	WORKRM 403	0.61	WORKRM 403	1.11	WORKRM 403	1.11
	BREAK 401	0.31	BREAK 401	0.66	BREAK 401	0.66
	STRS A-5	0.32	STRS A-5	0.69	STRS A-5	0.66
	STRS B-5	0.41	STRS B-5	0.69	STRS B-5	0.66
	CR 502	0.31	CR 502	1.12	CR 502	1.12
	CR 504	0.31	CR 504	1.12	CR 504	1.12
	CR 506	0.31	CR 506	1.12	CR 506	1.12
	RR JC 5	0.4	RR JC 5	0.98	RR JC 5	0.88
	RR 511	0.58	RR 511	0.98	RR 511	0.88
	STOR 509	0.33	STOR 509	0.57	STOR 509	0.57
	CR 510	0.53	CR 510	1.12	CR 510	1.12
	CR 508	0.33	CR 508	1.12	CR 508	1.12
	CORR-5	0.33	CORR-5	0.66	CORR-5	0.63
	CUSTODIAL 505	0.45	CUSTODIAL 505	1.59	CUSTODIAL 505	1.59
	LOCKR 507	0.39	LOCKR 507	0.68	LOCKR 507	0.68
	RESOURCE 503	0.65	RESOURCE 503	1.11	RESOURCE 503	1.11
	LIB 501	0.68	LIB 501	1.24	LIB 501	1.25
	MECH	0.26	MECH	0.95	MECH	0.42
	STOR-PH	0.22	STOR-PH	0.57	STOR-PH	0.57

	Proposed Design	SCA GSG Baseline ASHRAE 90.1-2010 App. G	LL86 Baseline ASHRAE 90.1-2013 ECBM
	STRS A-PH 0.51	STRS A-PH 0.69	STRS A-PH 0.66
Interior lighting:	Whole Building LPD - 0.20 W/sf	Whole Building LPD - 0.52 W/sf	Whole Building LPD - 0.50 W/sf
Mandatory Lighting Controls	Vacancy sensors (manual on/automatic off) in classrooms, storage rooms, enclosed offices, IDF rooms, staff restrooms, changing rooms, reading room. **no credits taken at this time, as all models require similar controls**	Vacancy sensors (manual on/automatic off) in all rooms are required per Section 9.4.1.2b ASHRAE 90.1-2010.	Vacancy sensors (manual on/automatic off) in all rooms are required per Section 9.4.1.1b,c ASHRAE 90.1 2013.
Daylight Dimming	Daylight dimming located in classrooms and offices. **no credits taken at this time, as all models require similar controls**	Daylight dimming controls as required by Section 9.4.1.5. It is unclear whether Table 9.6.2 is applicable toward the Baseline case	Daylight dimming controls as required by Section 9.4.1.1e It is unclear whether Table 9.6.3 is applicable toward the Baseline case
Exterior Lighting	205 W to illuminate building entrances and exits based on lighting plans	1,460 W per ASHRAE 90.1-2010 Table 9.4.3B	1,460 W per ASHRAE 90.1-2013 Table 9.4.2-2
Elevators	(2) elevators	(2) elevators	(2) elevators
Equipment Power	Input according to "eQuest Input Summary for SCA Prototypical Model", Table 4. Occupancy & Equipment Loads by Space Type	Same as proposed design	Same as proposed design

	Proposed Design	SCA GSG Baseline ASHRAE 90.1-2010 App. G	LL86 Baseline ASHRAE 90.1-2013 ECBM

Equipment power densities

All three models have the equipment modeled as below

Space	EPD schedule	W/sf	kW	Space	EPD schedule	W/sf	kW
CR 102	CLASS-EQP-YR	1.52	1.5	CR 306	CLASS-EQP-YR	1.52	1.2
OFF 104	OFFICE-EQP-YR	5.3	1.8	OFF 308	OFFICE-EQP-YR	5.3	0.9
OFF 106	OFFICE-EQP-YR	5.3	2.8	CR 301	CLASS-EQP-YR	1.52	1.2
Caf 108	CAFE-EQP-YR	0.25	0.6	CR 303	CLASS-EQP-YR	1.52	1.2
KITCH 115	KITCHEN-EQP-YR	7.71	11.9	CR 305	CLASS-EQP-YR	1.52	1.2
MTNG 109	OFFICE-EQP-YR	5.3	1.6	CR 402	CLASS-EQP-YR	1.52	1.2
Nurse 107	OFFICE-EQP-YR	5.3	2.6	CR 404	CLASS-EQP-YR	1.52	1.2
CR 105	CLASS-EQP-YR	1.52	1.4	CR 406	CLASS-EQP-YR	1.52	1.3
CR 101	CLASS-EQP-YR	1.52	1.4	MDF 411	DATA-EQP-YR	7.5	2.3
CR 202	CLASS-EQP-YR	1.52	1.5	PROJECT 408	OFFICE-EQP-YR	5.3	6.4
CR 204	CLASS-EQP-YR	1.52	1.5	OFF 407	OFFICE-EQP-YR	5.3	2.9
CR 206	CLASS-EQP-YR	1.52	0.6	CR 405	CLASS-EQP-YR	1.52	0.8
CR 210	CLASS-EQP-YR	1.52	1.4	WORKRM 403	OFFICE-EQP-YR	5.3	2.4
OFF 216	OFFICE-EQP-YR	5.3	0.4	BREAK 401	OFFICE-EQP-YR	5.3	2.5
GYM 216	GYM-EQP-YR	0.25	0.7	CR 502	CLASS-EQP-YR	1.52	1.2
STAGE 216	GYM-EQP-YR	0.25	0.2	CR 504	CLASS-EQP-YR	1.52	1.2
CR 201	CLASS-EQP-YR	1.52	1.2	CR 506	CLASS-EQP-YR	1.52	1.2
CR 203	CLASS-EQP-YR	1.52	1.2	CR 510	CLASS-EQP-YR	1.52	0.8
CR 205	CLASS-EQP-YR	1.52	1.2	CR 508	CLASS-EQP-YR	1.52	1.3
IDF 209	DATA-EQP-YR	7.5	0.8	CUSTODIAL 505	OFFICE-EQP-YR	5.3	3.6
CR 302	CLASS-EQP-YR	1.52	1.2	RESOURCE 503	OFFICE-EQP-YR	5.3	2.3
CR 304	CLASS-EQP-YR	1.52	1.2	LIB 501	CLASS-EQP-YR	1.52	1.5

	Proposed Design	SCA GSG Baseline ASHRAE 90.1-2010 App. G	LL86 Baseline ASHRAE 90.1-2013 ECBM
HVAC System Description	(1) Variable volume air handling unit (AHU) supplies ventilation, heating and cooling to classrooms, offices and corridors. (1) AHU serves the kitchen and cafeteria. (1) AHU serves the gymnasium. Heating and cooling to these units is provided by a central boiler and chiller. Finned-tube radiation (FTR) provides additional heating to the classrooms and offices as required. Hot water unit heaters serve minimally heated spaces such as the stairs and vestibules. Electric unit heaters serve the mechanical room. Air-source heat pumps serve areas which may require cooling during unoccupied hours such as the IDF rooms and dry kitchen storage.	Per 90.1-2010 Appendix G Main systems are System #5: Packaged rooftop VAV with reheat (PVAV), with those zones that fall under the exceptions to G3.1.1 modeled as PSZ-AC systems (System #3) per Tables G3.1.1A and B. Zones which are heated only are served by System 9-Heating and Ventilation	Per 90.1-2013 Section 11: Main system is a System #2 – VAV with chilled water and hot water central coils, and hot water reheat provided by a central boiler.
Water-side System summary	Chiller: 10.2 EER CHW Loop: variable speed Boiler: 90% condensing boilers (two units) HHW Loop: variable speed with primary loop serving the AHUs, and the secondary loop serving the perimeter reheat as well as the cabinet heaters.	No chilled water equipment Boiler: 80% draft boiler (two units) HHW Loop: variable speed; 19 W/gpm	No chilled water equipment Boiler: 80% draft boiler (two units) HHW Loop: variable speed; same pumps as proposed

	Proposed Design	SCA GSG Baseline ASHRAE 90.1-2010 App. G	LL86 Baseline ASHRAE 90.1-2013 ECBM

Air-side System summary

100CD Proposed		AHU-1 CLASS-SYS		AHU-4 GYM-SYS		AHU-3 K/C-SYS		DATA-SYS	HEAT-ONLY-SYS	AHU-2 CLASS SYS	
FloorArea	(ft²)	16,836		4,108		4,836		729	8,622	24,743	
CoolingCapacity	(Btu/h)	707,000		426,000		347,000		18,336	-	715,000	
HeatingCapacity	(Btu/h)	451,800		256,000		186,500		-	79,697	289,000	
BaseboardHeating	(Btu/h)	4,474		1,517		60,057		-	-	252,414	
ZoneReheat	(Btu/h)	387,116		190,980		-		-	-	-	
	Ratio	0.33		0.27		0.22		0.09	-	0.33	
OutsideAir	cfm	6,519		2,687		1,695		44		6,787	
Fan Information:Fan	Type	Supply	Return	Supply	Return	Supply	Return	Supply	Supply	Supply	Return
Capacity	(CFM)	19,875	19,875	10,100	9,000	7,565	7,565	479	1,037	20,320	20,320
Power	(kW)	19.3	13.1	8.8	3.2	6.1	3.2	0.3	0.6	19.9	13.3

GSG Baseline		Floor 1 CLASS SYS		Floor 2 CLASS-SYS		Floor 3 CLASS-SYS		Floor 4 CLASS-SYS		Floor 5 CLASS SYS		AHU-4 GYM-SYS		AHU-3 Caf-SYS		DATA-SYS	HEAT-ONL	DATA-sys2	EMR-sys	AHU-3 Kitchen	
FloorArea	(ft²)	19732		16966		17375		17072		17375		4108		2668		303	8622	101	324	2168	
CoolingCapacity	(Btu/h)	436451		584884		599877		602691		595711		507150		145582		12609	0	4093	7537	91766	
CoolingEIR	(Btu/Bt	0.264		0.295		0.295		0.295		0.295		0.295		0.264		0.251	0	0.251	0.251	0.264	
HeatingCapacity	(Btu/h)	74509		165019		198956		141918		140490		377453		190512		0	86886	0	0	97771	
BaseboardHeating	(Btu/h)	0		0		0		0		0		0		0		0	0	0	0	0	
ZoneReheat	(Btu/h)	150918		188988		190632		204071		199580		0		0		0	0	0	0	0	
	Ratio	0.163		0.224		0.251		0.196		0.197		0.206		0.549		0.064	0	0.067	0.121	0.085	
OutsideAir	cfm	1687.21		2903.488		3281.825		2743.412		2696.733		1974.72		1491.6		18.048		6.097	19.36	204	
Fan Information:Fan	Type	Supply	Return	Supply	Return	Supply	Return	Supply	Return	Supply	Return	Supply	Return	Supply	Return	Supply	Supply	Supply	Supply	Supply	Return
Capacity	(CFM)	10351	10351	12962	12962	13075	13075	13997	13997	13689	13689	9586	9586	2717	2717	282	1151	91	160	2400	2400
Power	(kW)	10.817	7.36	13.403	9.112	13.506	9.179	14.515	9.868	14.154	9.623	10.986	5.665	3.094	1.573	0.253	0.978	0.087	0.145	1.459	0.747

LL86 Baseline		AHU-1 CLASS-SYS		AHU-4 GYM-SYS		AHU-3 K/C-SYS		DATA-SYS	HEAT-ONLY-SYS	AHU-2 CLASS SYS	
FloorArea	(ft²)	16,836		4,108		5,159		729	8,299	24,743	
CoolingCapacity	(Btu/h)	816,000		454,000		347,000		21,188	-	787,000	
HeatingCapacity	(Btu/h)	451,800		256,000		186,500		-	101,563	289,000	
BaseboardHeating	(Btu/h)	4,785		3,482		49,857		-	-	317,198	
ZoneReheat	(Btu/h)	386,370		190,890		-		-	-	-	
	Ratio	0		0		0		0	-	0	
OutsideAir	cfm	6,519		2,687		1,695		44		6,773	
Fan Information:Fan	Type	Supply	Return	Supply	Return	Supply	Return	Supply	Supply	Supply	Return
Capacity	(CFM)	19,875	19,875	10,100	9,000	7,565	7,565	559	1,324	22,352	22,352
Power	(kW)	19.28	13.15	8.79	3.16	6.06	3.18	0.33	0.78	21.85	14.66

	Proposed Design	SCA GSG Baseline ASHRAE 90.1-2010 App. G	LL86 Baseline ASHRAE 90.1-2013 ECBM
Air-side System Summary (continued)	• SV-A reports for each model are provided for additional information • The baseline fan power credit includes: o Fully ducted returns (0.5) o Return/exhaust airflow control devices (0.5) o MERV-13 filter (0.9) o MERV-7 return air filter (0.27); only those areas served by AHU-1 & AHU-2 o Sound attenuation (0.15) o Energy Recovery Wheel; only those areas served by AHU-1 & AHU-2 (0.5 x 2)		
Electric and Natural gas usage summary	Total electricity: 280,860 kWh Total natural gas: 6,288 therms	Total electricity: 452,670 kWh Total natural gas: 6,051 therms	Total electricity: 373,402 kWh Total natural gas: 6,226 therms
	Please see PS-E report attached for details		

Note:

This report is developed for the purpose of calculating the energy performance per requirements ASHRAE 90.1-2010 Appendix G and ASHRAE 90.1-2010 Section 11. Actual energy use and cost will be greater, since the modeling rules do not account for many real-life issues, such as quality of construction, equipment functionality, building operation and other factors. Reasons include, but are not limited to the following:

- The ECBM Baseline assumes perfection, as noted in the bullets below, so the design model also must assume perfection:
  - The HVAC equipment is manufactured per standards. The design of the HVAC systems is such that the each individual piece of equipment performs optimally. The installation is flawless, and the operation optimum.
  - Lighting and lighting controls are perfectly manufactured/installed and function as such.
  - The insulation is installed perfectly. There are no gaps and no rips caused by pipes and wiring. The windows are put in place with perfect caulking.
- Certain real-life effects are not included in the baseline calculations, and therefore are not included in the design calculations either. For instance, the three-dimensional heat loss effect that occurs at the roof parapet
- Occupant behavior is idealized
- Other effects, such as uncertainties in equipment (plug load) operation.

Please refer to the Informative Note in ASHRAE 90.1-2010 Section 11.1: "*The energy cost budget and the design energy cost calculations are applicable only for determining compliance with this standard. They are not predictions of actual energy consumption or costs of the proposed design after construction. Actual experience will differ from these calculations due to variations such as occupancy, building operation and maintenance, weather, energy use not covered by this standard, changes in energy rates between design of the building and occupancy, and precision of the calculation tool.*"

To fully comply with ASHRAE 90.1, Section 11 and/or Appendix G, the design must comply with all mandatory provisions of ASHRAE 90.1 Sections 5.4 (Building Envelope), 6.4 (HVAC Equipment), 7.4 (Service Water Heating), 8.4 (Power), 9.4 (Lighting) and 10.4 (Other Equipment). Compliance with these provisions is not part of Lilker EMO's energy analysis. Typically, this compliance is certified by the Architect (Section 5.4 and applicable sub-sections of Section 5.8) and the HVAC Engineer (Sections 6.4, 7.4, 8.4, 9.4 and 10.4

Supporting Documentations:

E 4.1P, E5.1R, A3.2

eQuest Energy Model Review Checklist Level 1

November 28, 2018

This model check list is recommended for model review at 60% CD and 100% CD.

BEPU: Building end use breakdown by fuel type
ES-D: Utility costs
LV-B: Summary of Spaces
LV-D: Details of Exterior Surfaces
LV-H: Details of windows
LV-I: Details of Constructions

REPORT: BEPU

Mark	Test	Reference #	Respond to checklist
	Is the "Weather file" consistent with the building location?	1	Yes, Laguardia weather file.
	"Task Lighting" is the same between the Baselines and Proposed?	3	All the same, not included.
	"Misc Equipment" is 20-35% of the Total Electricity? If outside of the range, is the reason documented in the report?	4	46.8%; this is due to increase in equipment power densities based on the new guideline
	All differences in "Misc Equipment" proposed & baseline values are documented in the report?	4	All same values
	"Domest Hot Wtr" is not more than 20% if work includes a new cafeteria and no more than 10% without? If yes, is there a reason documented in the report?	5	14.8%
	Is Proposed "Space Cooling" more than 30% Total Electricity? If yes, is there a reason documented in report?	7	16.7%
	Is Proposed "Vent Fans" more than 30% Total Electricity? If yes, is there a reason documented in report?	10	15.9%
	"Hours any zone above cooling throttling range" plus "Hours any zone below heating throttling range" are less than 300, and the sum of the proposed hours is no larger than the baseline hours plus 50 hours?	14	Yes and Yes
	Is the sum of the hours above cooling throttling range and heating throttling range above 300?	14	No

Supporting Documentations:

Mark	Test	Reference #	Respond to checklist
	Does the total amount of hours the design is out of range (heating + cooling) differ from the GSG baseline by more than 50 hours?	14	Yes, the Baseline has more total amount of hours out of range.
	Does the total amount of hours the design is out of range (heating + cooling) exceed the LL86 baseline by more than 50 hours?	14	No.
	"Percent of hours any plant load not satisfied" more than 0%? If yes, is a reason documented in report? Notes: If this value is greater than 0% then it is indicative of an undersized plant, or oversized cooling/heating load.	14	0%
NA	General Report Notes: The usage by area (kWh/sqft-yr) may include unconditioned areas like plenums. The EUI should be determined using the project area.		Report area is fine, plenums are not included.

REPORT: ES-D

Mark	Test	Reference #	Respond to checklist
	Do the utility costs match the values in the report?	1	Yes

REPORT: LV-B

Mark	Test	Reference #	Respond to checklist
	Are the lighting power densities consistent with the report/ photometric drawings/ code requirements? Are the occupancy sensor controls accounted for in the LPD? Note: The lighting power density may be entered as averages for a space type, or may be entered as a space specific value.	1	Proposed LPD based on space-by-space lighting take-offs. No occupancy sensor savings claimed at this time No daylight sensor savings claimed at this time.
	Are the equipment power densities reasonable?	2	EPD modeled based on the SCA guideline issued in December 2018
	Is the modeled project area within 5% of the design area? Note: The total area may include plenums or other unconditioned spaces that are not part of the design, but are required for proper modeling. The areas for each space do not take into account the floor multipliers, but the total area does.	3	Yes

REPORT: LV-D

Mark	Test	Reference #	Respond to checklist
	Is the "Window Area" divided by the "Window+Wall Area" for the "All Walls" line consistent with the report window to wall ratio? Note: Once a DOB submission set has been completed the summary values of this report should match within 5% of the values documented on the EN drawings. Door areas and U-values are not accounted for in the LV-D report. The wall area includes the doors.	1	Yes
	Roof area consistent with the footprint of the building?	2	Yes

REPORT: LV-H (Select a few representative window definitions)

Mark	Test	Reference #	Respond to checklist
	Is the weighted average U-value ([Frame U-value * Frame area + Center-of-Glass U-value * {Glass Area – Frame Area}]/Glass Area) consistent with the report values? Note: It is common to see a frame area of zero. Many modelers do their own weighted average calculation outside the software or get the overall U-value from the manufacturer's rep so enter the values in a simplified form than trying to calibrate a layered input to match manufacturer data.	1	Yes
	Is the "Glass Shading Coeff" and "Glass Visible Trans" consistent with the report values?	2	Yes

Supporting Documentations:

REPORT: LV-I

Mark	Test	Reference #	Respond to checklist
	Are the "U-values" within the acceptable range of the report values? Note: Please see note in LV-D report section regarding U-value calculations. The U-value from the LV-I report will be higher than the reported value, but the variation is dependent on the thermal properties of the wall. **Reported U-value** / **LV-I deviation** <0.07 / < 5% higher 0.07-0.13 / 5-10% higher 0.13-0.17 / 10-15% higher 0.17-0.2 / 15-20% higher	1	Yes

Supporting Documentations:

E 4.1P, E5.1R, A3.2

eQuest Energy Model Review Checklist Level 2

November 28, 2018
This model check list is recommended for model review at 60% CD and 100% CD.

BEPU: Building end use breakdown by fuel type
ES-D: Utility costs
LV-B: Summary of Spaces
LV-D: Details of Exterior Surfaces
LV-H: Details of windows
LV-I: Details of Constructions
SV-A: System Design Parameters for HVAC (1 for each system)
PV-A: Plant Design Parameters
PS-E: Energy End-Use Summary for All Meters (one report for electricity, one for fuel)

REPORT: BEPU

Mark	Test	Reference #	Respond to checklist
	Is the "Weather file" consistent with the building location?	1	Yes, Laguardia weather file.
	"Task Lighting" is the same between the Baselines and Proposed?	3	Same, not included.
	"Misc Equipment" is 20-35% of the Total Electricity? If outside of the range, is the reason documented in the report?	4	~34.5%
	All differences in "Misc Equipment" proposed & baseline values are documented in the report?	4	All same values
	"Domest Hot Wtr" is not more than 20% if work includes a new cafeteria and no more than 10% without? If yes, is there a reason documented in the report?	5	17% of total building energy; 38% of natural gas The building performs well on the heating side, thus increase the percentage of DHW on gas.
	Is the split between electricity & natural gas "Space Heating" consistent with report documentation? Note: Example: Proposed (and/or baseline) space heating electricity is 30% of the total electricity, but documentation says the primary heating source is natural gas. Some electricity is acceptable, depending on modeler's preference to model onboard controls.	6	Yes, very minimal electric heating, mainly electric consumption of condensing boilers

Supporting Documentations:

Mark	Test	Reference #	Respond to checklist
	Does the GSG baseline show electric use for heating? Note: the GSG baseline should only show electric heating under very special circumstances.	6	No electric heating
	Is Proposed "Space Cooling" more than 30% Total Electricity? If yes, is there a reason documented in report?	7	~18.7%
	Is there a value in "Heat Rejection"? Does the report document a separate cooling tower? Are the EFLH consistent with the "Space Cooling" number? Notes: A value should not show up here if an air-cooled chiller or a packaged RTU are properly modeled. Values should existing only when a water based condenser loop is required (GSG baseline for schools > 150,000 ft2).	8	No CTs, no heat rejection energy
	Is Proposed "Vent Fans" more than 30% Total Electricity? If yes, is there a reason documented in report?	10	No
	Is the split between electricity & natural gas "Domest Hot Wtr" consistent with report documentation? Notes: Example: Proposed (and/or baseline) domestic hot water is only electricity, but documentation says the hot water heater should be natural gas. Some electricity is acceptable, depending on modeler's preference to handle the recirculation pump power and/or the onboard controls.	11	OK, all natural gas
	"Hours any zone above cooling throttling range" plus "Hours any zone below heating throttling range" are less than 300, and the sum of the proposed hours is no larger than the baseline hours plus 50 hours?	14	Yes and Yes
	Is the sum of the hours above cooling throttling range and heating throttling range above 300?	14	No
	Does the total amount of hours the design is out of range (heating + cooling) differ from the GSG baseline by more than 50 hours?	14	Yes, Baseline has more total amount of hours out of range.

Supporting Documentations:

Mark	Test	Reference #	Respond to checklist
	Does the total amount of hours the design is out of range (heating + cooling) exceed the LL86 baseline by more than 50 hours?	14	No.
	"Percent of hours any plant load not satisfied" more than 0%? If yes, is a reason documented in report? Notes: If this value is greater than 0% then it is indicative of an undersized plant, or oversized cooling/heating load.	14	0%
NA	General Report Notes: The usage by area (kWh/sqft-yr) may include unconditioned areas like plenums. The EUI should be determined using the project area.		Report area is fine, so should EUI.

REPORT: ES-D

Mark	Test	Reference #	Respond to checklist
	Do the utility costs match the values in the report?	1	Yes

REPORT: LV-B

Mark	Test	Reference #	Respond to checklist
	Are the lighting power densities consistent with the report/ photometric drawings/ code requirements? Are the occupancy sensor controls accounted for in the LPD? Note: The lighting power density may be entered as averages for a space type, or may be entered as a space specific value.	1	Proposed LPD based on space-by-space lighting take-offs. No occupancy sensor savings claimed at this time No daylight sensor savings claimed at this time.
	Are the equipment power densities reasonable?	2	EPD modeled based on the appropriate expectation of plug load within each space types
	Is the modeled project area within 5% of the design area? Note: The total area may include plenums or other unconditioned spaces that are not part of the design, but are required for proper modeling. The areas for each space do not take into account the floor multipliers, but the total area does.	3	Yes

Supporting Documentations:

REPORT: LV-D

Mark	Test	Reference #	Respond to checklist
	Is the "Window Area" divided by the "Window+Wall Area" for the "All Walls" line consistent with the report window to wall ratio? Note: Once a DOB submission set has been completed the summary values of this report should match within 5% of the values documented on the EN drawings. Door areas and U-values are not accounted for in the LV-D report. The wall area includes the doors.	1	Yes
	Roof area consistent with the footprint of the building?	2	Yes
	Select a few representative wall definitions, are their U-values consistent with report values? In general, the U-value from the LV-D report will be lower than the reported value, and should be within 5%. Note: The LV-D and LV-I reports calculations are not consistent with the protocol established by ASHRAE 90.1 Appendix A. The interior air film coefficient default does not account for the orientation of the construction. The LV-I U-value calculation does not consider the exterior air film, and the LV-D U-value calculation uses a different value than specified by ASHRAE 90.1 Appendix A. During the simulation, eQuest calculates the exterior air film hourly based on the wind speed from the weather file.	3	Yes
	Select a few representative window definitions, are their U-values consistent with report values? Note: The window U-values include an exterior film with R-value = 0.3. NFRC uses 0.17 to calculate the U-factor. The U-value from the LV-D report will be 3-5% lower than reported value.	4	Yes

REPORT: LV-H (Select a few representative window definitions)

Mark	Test	Reference #	Respond to checklist
	Is the weighted average U-value ([Frame U-value * Frame area + Center-of-Glass U-value * {Glass Area – Frame Area}]/Glass Area) consistent with the report values? Note: It is common to see a frame area of zero. Many modelers do their own weighted average calculation outside the software or get the overall U-value from the manufacturer's rep so enter the values in a simplified form than trying to calibrate a layered input to match manufacturer data.	1	Yes
	Is the "Glass Shading Coeff" and "Glass Visible Trans" consistent with the report values?	2	Yes
	Is a "setback" modeled? If yes, is it consistent with the design? No "setback" should be modeled in a baseline for new construction.	3	Yes

REPORT: LV-I

Mark	Test	Reference #	Respond to checklist
	Are the "U-values" within the acceptable range of the report values? Note: Please see note in LV-D report section regarding U-value calculations. The U-value from the LV-I report will be higher than the reported value, but the variation is dependent on the thermal properties of the wall. **Reported U-value** / **LV-I deviation** <0.07 / < 5% higher 0.07-0.13 / 5-10% higher 0.13-0.17 / 10-15% higher 0.17-0.2 / 15-20% higher	1	Yes

Supporting Documentations:

REPORT: SV-A- General

Mark	Test	Reference #	Respond to checklist
	Has an SV-A report been provided for all systems referenced in the report?	NA	Will be available for review
	Is there a 1-1 correspondence in the number of systems between the Proposed and LL86 baseline?	NA	Yes
	Is there one system per floor for the GSG baseline, with the exception of the public assembly spaces and 24hr data rooms?	NA	Yes, the exception areas are gymnatorium, cafeteria, kitchen, and data rooms.

REPORT: SV-A

Mark	Test	Reference #	Respond to checklist
	Are "Capacity (CFM)" and "Power Demand" consistent with report?	1	Yes.
	Is the "outside air ratio" consistent with the ratio as calculated using the report values? Notes: Due to round-off error, the outdoor air flow calculated by this ratio and the "Capacity (CFM)" will not generally match the report CFM, but should be within 5%. If you total up the "Outside Air Flow (CFM)" for each zone for that system, it should match the report CFM exactly.	2	Yes. Outside air flow rates are modeled according to the ventilation calc table.
	Is the "outside air ratio" bigger than the "minimum flow"? If yes, ask modeler to correct. Notes: eQuest has a known bug where even though the software should reset the minimum flow up to the outside air ratio despite what is specified, it will not.	3	Because the OA is specified as cfm per zone based on ventilation calc, eQuest should modulate the zone min flow to accommodate the OA cfm needed. It is unclear how forcing min flow fraction will necessarily address this particular OA ratio.

NOTE(1): When reviewing systems take note that Terminal type units will present information slightly differently in SV-A rather than multi-zone type units. A terminal type system is a single definition in the model that generates one system per attached zone. As such a terminal type system will report individual fans, airflows, cooling capacities, and heating capacities. If a common outdoor air system serves the terminal units, then the associated heating/cooling for that sub-system will be listed in top half of the report.

NOTE(2): It is a commonly accepted practice that modelers treat multiple heating coils in series as a single coil as long as they are connected to the same heating plant and proper controls are implemented to prevent reheat if none is designed. This approximation is acceptable as models do not consider coil freeze-up. For this reason, it is not unusual to see "no" central heating capacity in the SV-A report. Instead all of the heating load will be listed in the reheat coils.

Supporting Documentations:

REPORT: PV-A

Mark	Test	Reference #	Respond to checklist
	Are "rated capacity" of proposed equipment consistent with report values?	1	Yes
	Does *Pumps* "Head" match between the Proposed and LL86 baseline?	2	Yes
	Calculate the GSG baseline "Power" / "Flow" for secondary & primary pumps. Does it add up to 19 W / gpm for heating, 22 W / gpm for cooling, and 19 W / gpm condenser loop?	3	Yes, for HHW loop. No chiller loop for GSG Baseline
	Are "Capacity Control" values consistent with the report? Note: If a loop is served by more than one pump (ie a hot water loop with two boilers and a pump for each boiler), then variable speed pumps will be reported as "VFD & STAGED".	4	Yes

REPORT: PS-E

Mark	Test	Reference #	Respond to checklist
	Use Max kW in this report to determine equivalent full load hours (EFLH) in the BEPU report for the various end-uses.	1	Should be OK; due to a variety of lighting schedules and LPDs, the lighting EFLH will be similar, but not identical.
	Do "Task lighting", "Misc equip", Domest Hot Wtr", and "Ext Usage" all have the same Max kW for all months? If not, is this explained in the report? i.e. Were a different set of schedules used? Note: Prototypical schedules are designed to have consistent maximums for all months. Additionally, the periodicity built into the prototypical schedules means that the month to month energy use for these end uses should only differ by the number of days. Deviations point to non-prototypical schedules were used.	2	Yes
	If daylighting is specified, does "Lights" Max kW have a minimum in the summer & maximum in the winter? Note: If daylighting is claimed, but not modeled the lighting use will only be determined by the schedule and the peak will not vary. The peak varies because of the change in solar angle from summer to winter. The use varies also	3	Not currently specified in the model.

	because the number of hours of daylight changes as well. When daylighting is modeled the EFLH will not match the schedule.		
	Is “Space Heating” zero for June to September? If not, is it explained in the report? i.e. is there reheat specified? Note: Prototypical model has heat indexed “off” for this period, and uses discharge air reset and VAV box position to eliminate any need for reheat.	4	Yes, PS-E confirmed
	Is “Space Cooling” minimal in winter? Are these values consistent with the data room equipment sizes? Note: The only HVAC equipment that should be running in winter months are the dedicated data closet and EMR split units. If the peaks in the winter exceed the estimated input power for this equipment then it is likely the central units are operating which should either be fixed or explained.	5	Yes, minimal to no cooling in cooler months

GSG Baseline Case eQuest Summary Reports:

BEPS

BEPU

ES-D

PS-E

LV-B

LV-D

LV-H

LV-I

SV-A

PV-A

REPORT- BEPS Building Energy Performance WEATHER FILE- NEW YORK LAGUARDI NY

	LIGHTS	TASK LIGHTS	MISC EQUIP	SPACE HEATING	SPACE COOLING	HEAT REJECT	PUMPS & AUX	VENT FANS	REFRIG DISPLAY	HT PUMP SUPPLEM	DOMEST HOT WTR	EXT USAGE	TOTAL
NONR ELECTRICITY													
MBTU	0.0	0.0	427.4	0.0	0.0	0.0	0.0	0.0	0.0	0.0	0.0	0.0	427.4
EM1 ELECTRICITY													
MBTU	397.2	0.0	0.0	0.0	329.4	0.0	12.0	335.9	0.0	0.0	0.0	21.8	1096.3
ELEV ELECTRICITY													
MBTU	0.0	0.0	21.3	0.0	0.0	0.0	0.0	0.0	0.0	0.0	0.0	0.0	21.3
FUEL NATURAL-GAS													
MBTU	0.0	0.0	0.0	0.0	0.0	0.0	0.0	0.0	0.0	0.0	0.0	0.0	0.0
NONR NATURAL-GAS													
MBTU	0.0	0.0	38.5	0.0	0.0	0.0	0.0	0.0	0.0	0.0	0.0	0.0	38.5
DHW- NATURAL-GAS													
MBTU	0.0	0.0	0.0	0.0	0.0	0.0	0.0	0.0	0.0	0.0	0.0	0.0	0.0
FM1 NATURAL-GAS													
MBTU	0.0	0.0	0.0	331.1	0.0	0.0	0.0	0.0	0.0	0.0	235.5	0.0	566.7
MBTU	397.2	0.0	487.1	331.1	329.4	0.0	12.0	335.9	0.0	0.0	235.5	21.8	2150.1

TOTAL SITE ENERGY 2150.09 MBTU 35.9 KBTU/SQFT-YR GROSS-AREA 35.9 KBTU/SQFT-YR NET-AREA
TOTAL SOURCE ENERGY 5309.90 MBTU 88.7 KBTU/SQFT-YR GROSS-AREA 88.7 KBTU/SQFT-YR NET-AREA

PERCENT OF HOURS ANY SYSTEM ZONE OUTSIDE OF THROTTLING RANGE = 2.57
PERCENT OF HOURS ANY PLANT LOAD NOT SATISFIED = 0.00
HOURS ANY ZONE ABOVE COOLING THROTTLING RANGE = 24
HOURS ANY ZONE BELOW HEATING THROTTLING RANGE = 200

NOTE: ENERGY IS APPORTIONED HOURLY TO ALL END-USE CATEGORIES.

REPORT- BEPU Building Utility Performance WEATHER FILE- NEW YORK LAGUARDI NY

	LIGHTS	TASK LIGHTS	MISC EQUIP	SPACE HEATING	SPACE COOLING	HEAT REJECT	PUMPS & AUX	VENT FANS	REFRIG DISPLAY	HT PUMP SUPPLEM	DOMEST HOT WTR	EXT USAGE	TOTAL
NONR ELECTRICITY													
KWH	0.	0.	125227.	0.	0.	0.	0.	0.	0.	0.	0.	0.	125227.
EM1 ELECTRICITY													
KWH	116374.	0.	0.	0.	96512.	0.	3511.	98416.	0.	0.	0.	6396.	321210.
ELEV ELECTRICITY													
KWH	0.	0.	6234.	0.	0.	0.	0.	0.	0.	0.	0.	0.	6234.
FUEL NATURAL-GAS													
THERM	0.	0.	0.	0.	0.	0.	0.	0.	0.	0.	0.	0.	0.
NONR NATURAL-GAS													
THERM	0.	0.	385.	0.	0.	0.	0.	0.	0.	0.	0.	0.	385.
DHW- NATURAL-GAS													
THERM	0.	0.	0.	0.	0.	0.	0.	0.	0.	0.	0.	0.	0.
FM1 NATURAL-GAS													
THERM	0.	0.	0.	3311.	0.	0.	0.	0.	0.	0.	2355.	0.	5667.

TOTAL ELECTRICITY 452670. KWH 7.560 KWH /SQFT-YR GROSS-AREA 7.560 KWH /SQFT-YR NET-AREA
TOTAL NATURAL-GAS 6051. THERM 0.101 THERM /SQFT-YR GROSS-AREA 0.101 THERM /SQFT-YR NET-AREA

PERCENT OF HOURS ANY SYSTEM ZONE OUTSIDE OF THROTTLING RANGE = 2.57
PERCENT OF HOURS ANY PLANT LOAD NOT SATISFIED = 0.00
HOURS ANY ZONE ABOVE COOLING THROTTLING RANGE = 24
HOURS ANY ZONE BELOW HEATING THROTTLING RANGE = 200

NOTE: ENERGY IS APPORTIONED HOURLY TO ALL END-USE CATEGORIES.

REPORT- ES-D Energy Cost Summary WEATHER FILE- NEW YORK LAGUARDI NY

UTILITY-RATE	RESOURCE	METERS	METERED ENERGY UNITS/YR	TOTAL CHARGE ($)	VIRTUAL RATE ($/UNIT)	RATE USED ALL YEAR?
REG-ELEC-TARIFF	ELECTRICITY	EM1 ELEV	327443. KWH	93517.	0.2856	YES
UNREG-ELEC-TARIFF	ELECTRICITY	NONR	125227. KWH	26101.	0.2084	YES
REG-GAS-TARIFF	NATURAL-GAS	FM1 FUEL DHW-	5667. THERM	6300.	1.1117	YES
UNREG-GAS-TARIFF	NATURAL-GAS	NONR	385. THERM	428.	1.1117	YES
				========== 126346.		

ENERGY COST/GROSS BLDG AREA: 2.11
ENERGY COST/NET BLDG AREA: 2.11

REPORT- PS-E Energy End-Use Summary for all Electric Meters WEATHER FILE- NEW YORK LAGUARDI NY

	LIGHTS	TASK LIGHTS	MISC EQUIP	SPACE HEATING	SPACE COOLING	HEAT REJECT	PUMPS & AUX	VENT FANS	REFRIG DISPLAY	HT PUMP SUPPLEM	DOMEST HOT WTR	EXT USAGE	TOTAL
JAN													
KWH	10384.	0.	12490.	0.	215.	0.	661.	9466.	0.	0.	0.	599.	33814.
MAX KW	51.932	0.000	47.706	0.000	2.797	0.000	2.609	46.755	0.000	0.000	0.000	1.460	148.134
DAY/HR	2/10	0/ 0	3/13	0/ 0	2/10	0/ 0	22/ 9	2/ 9	0/ 0	0/ 0	0/ 0	1/ 1	8/10
PEAK ENDUSE	51.932	0.000	45.561	0.000	1.388	0.000	2.525	46.727	0.000	0.000	0.000	0.000	
PEAK PCT	35.1	0.0	30.8	0.0	0.9	0.0	1.7	31.5	0.0	0.0	0.0	0.0	
FEB													
KWH	9393.	0.	11320.	0.	137.	0.	634.	8678.	0.	0.	0.	501.	30663.
MAX KW	51.932	0.000	47.706	0.000	1.876	0.000	2.642	46.794	0.000	0.000	0.000	1.460	147.970
DAY/HR	1/10	0/ 0	1/13	0/ 0	23/ 9	0/ 0	6/ 9	20/ 9	0/ 0	0/ 0	0/ 0	1/ 1	26/10
PEAK ENDUSE	51.932	0.000	45.561	0.000	1.294	0.000	2.455	46.727	0.000	0.000	0.000	0.000	
PEAK PCT	35.1	0.0	30.8	0.0	0.9	0.0	1.7	31.6	0.0	0.0	0.0	0.0	
MAR													
KWH	10835.	0.	12873.	0.	284.	0.	456.	8792.	0.	0.	0.	543.	33783.
MAX KW	51.932	0.000	47.706	0.000	4.987	0.000	2.178	46.743	0.000	0.000	0.000	1.460	147.692
DAY/HR	1/10	0/ 0	1/13	0/ 0	7/ 9	0/ 0	5/ 8	5/ 9	0/ 0	0/ 0	0/ 0	1/ 1	5/10
PEAK ENDUSE	51.932	0.000	45.561	0.000	1.484	0.000	1.972	46.742	0.000	0.000	0.000	0.000	
PEAK PCT	35.2	0.0	30.8	0.0	1.0	0.0	1.3	31.6	0.0	0.0	0.0	0.0	
APR													
KWH	8266.	0.	10740.	0.	2718.	0.	185.	6271.	0.	0.	0.	526.	28704.
MAX KW	51.932	0.000	47.706	0.000	84.562	0.000	1.595	58.201	0.000	0.000	0.000	1.460	223.160
DAY/HR	2/10	0/ 0	2/13	0/ 0	27/14	0/ 0	4/ 8	26/14	0/ 0	0/ 0	0/ 0	1/ 2	27/14
PEAK ENDUSE	49.940	0.000	40.939	0.000	84.562	0.000	1.141	46.578	0.000	0.000	0.000	0.000	
PEAK PCT	22.4	0.0	18.3	0.0	37.9	0.0	0.5	20.9	0.0	0.0	0.0	0.0	
MAY													
KWH	10835.	0.	12873.	0.	12018.	0.	78.	8506.	0.	0.	0.	508.	44817.
MAX KW	51.932	0.000	47.706	0.000	110.038	0.000	1.309	53.288	0.000	0.000	0.000	1.460	253.204
DAY/HR	1/10	0/ 0	1/13	0/ 0	23/14	0/ 0	23/12	30/14	0/ 0	0/ 0	0/ 0	1/ 2	23/14
PEAK ENDUSE	49.940	0.000	40.939	0.000	110.038	0.000	1.309	50.978	0.000	0.000	0.000	0.000	
PEAK PCT	19.7	0.0	16.2	0.0	43.5	0.0	0.5	20.1	0.0	0.0	0.0	0.0	
JUN													
KWH	10355.	0.	12064.	0.	16837.	0.	73.	8638.	0.	0.	0.	448.	48416.
MAX KW	51.932	0.000	47.706	0.000	140.033	0.000	1.309	57.384	0.000	0.000	0.000	1.460	285.311
DAY/HR	1/10	0/ 0	1/13	0/ 0	18/15	0/ 0	8/11	18/12	0/ 0	0/ 0	0/ 0	1/ 2	18/14
PEAK ENDUSE	49.940	0.000	39.939	0.000	136.938	0.000	1.309	57.184	0.000	0.000	0.000	0.000	
PEAK PCT	17.5	0.0	14.0	0.0	48.0	0.0	0.5	20.0	0.0	0.0	0.0	0.0	
JUL													
KWH	8735.	0.	6134.	0.	20454.	0.	231.	9213.	0.	0.	0.	488.	45254.
MAX KW	46.655	0.000	17.922	0.000	132.595	0.000	1.309	57.763	0.000	0.000	0.000	1.460	244.841
DAY/HR	2/10	0/ 0	2/13	0/ 0	9/14	0/ 0	2/10	2/10	0/ 0	0/ 0	0/ 0	1/ 2	9/14
PEAK ENDUSE	44.663	0.000	14.793	0.000	132.595	0.000	1.309	51.481	0.000	0.000	0.000	0.000	
PEAK PCT	18.2	0.0	6.0	0.0	54.2	0.0	0.5	21.0	0.0	0.0	0.0	0.0	
AUG													
KWH	9481.	0.	6232.	0.	19025.	0.	208.	9260.	0.	0.	0.	533.	44739.
MAX KW	46.655	0.000	17.922	0.000	111.133	0.000	1.309	52.692	0.000	0.000	0.000	1.460	221.951
DAY/HR	1/10	0/ 0	1/13	0/ 0	24/14	0/ 0	2/13	6/11	0/ 0	0/ 0	0/ 0	1/ 2	6/13
PEAK ENDUSE	44.663	0.000	17.922	0.000	106.617	0.000	1.309	51.440	0.000	0.000	0.000	0.000	
PEAK PCT	20.1	0.0	8.1	0.0	48.0	0.0	0.6	23.2	0.0	0.0	0.0	0.0	

REPORT- PS-E Energy End-Use Summary for all Electric Meters WEATHER FILE- NEW YORK LAGUARDI NY
(CONTINUED)

SEP													
KWH	9452.	0.	11461.	0.	14570.	0.	52.	7579.	0.	0.	0.	526.	43639.
MAX KW	51.932	0.000	47.706	0.000	135.808	0.000	1.309	56.689	0.000	0.000	0.000	1.460	281.821
DAY/HR	4/10	0/ 0	21/13	0/ 0	10/ 9	0/ 0	7/13	10/13	0/ 0	0/ 0	0/ 0	1/ 2	10/13
PEAK ENDUSE	49.940	0.000	46.206	0.000	127.677	0.000	1.309	56.689	0.000	0.000	0.000	0.000	
PEAK PCT	17.7	0.0	16.4	0.0	45.3	0.0	0.5	20.1	0.0	0.0	0.0	0.0	
OCT													
KWH	10835.	0.	12873.	0.	7309.	0.	124.	7770.	0.	0.	0.	543.	39453.
MAX KW	51.932	0.000	47.706	0.000	77.398	0.000	1.515	42.259	0.000	0.000	0.000	1.460	207.820
DAY/HR	1/10	0/ 0	1/13	0/ 0	24/15	0/ 0	29/ 8	3/16	0/ 0	0/ 0	0/ 0	1/ 2	3/13
PEAK ENDUSE	49.940	0.000	47.706	0.000	70.502	0.000	0.765	38.906	0.000	0.000	0.000	0.000	
PEAK PCT	24.0	0.0	23.0	0.0	33.9	0.0	0.4	18.7	0.0	0.0	0.0	0.0	
NOV													
KWH	9904.	0.	12001.	0.	2883.	0.	255.	7459.	0.	0.	0.	559.	33060.
MAX KW	51.932	0.000	47.706	0.000	55.012	0.000	2.296	46.742	0.000	0.000	0.000	1.460	180.815
DAY/HR	1/10	0/ 0	1/13	0/ 0	6/14	0/ 0	27/ 8	26/ 9	0/ 0	0/ 0	0/ 0	1/ 2	6/13
PEAK ENDUSE	49.940	0.000	47.706	0.000	49.709	0.000	0.009	33.450	0.000	0.000	0.000	0.000	
PEAK PCT	27.6	0.0	26.4	0.0	27.5	0.0	0.0	18.5	0.0	0.0	0.0	0.0	
DEC													
KWH	7900.	0.	10400.	0.	63.	0.	554.	6785.	0.	0.	0.	623.	26326.
MAX KW	51.932	0.000	47.706	0.000	8.188	0.000	2.556	46.741	0.000	0.000	0.000	1.460	147.085
DAY/HR	3/10	0/ 0	3/13	0/ 0	11/ 9	0/ 0	3/ 9	10/10	0/ 0	0/ 0	0/ 0	1/ 1	10/10
PEAK ENDUSE	51.932	0.000	45.561	0.000	1.023	0.000	1.828	46.741	0.000	0.000	0.000	0.000	
PEAK PCT	35.3	0.0	31.0	0.0	0.7	0.0	1.2	31.8	0.0	0.0	0.0	0.0	
	=======	=======	=======	=======	=======	=======	=======	=======	=======	=======	=======	=======	========
KWH	116374.	0.	131460.	0.	96512.	0.	3511.	98416.	0.	0.	0.	6396.	452670.
MAX KW	51.932	0.000	47.706	0.000	140.033	0.000	2.642	58.201	0.000	0.000	0.000	1.460	285.311
MON/DY	1/ 2	0/ 0	1/ 3	0/ 0	6/18	0/ 0	2/ 6	4/26	0/ 0	0/ 0	0/ 0	1/ 1	6/18
PEAK ENDUSE	49.940	0.000	39.939	0.000	136.938	0.000	1.309	57.184	0.000	0.000	0.000	0.000	
PEAK PCT	17.5	0.0	14.0	0.0	48.0	0.0	0.5	20.0	0.0	0.0	0.0	0.0	

REPORT- PS-E Energy End-Use Summary for all Fuel Meters WEATHER FILE- NEW YORK LAGUARDI NY

	LIGHTS	TASK LIGHTS	MISC EQUIP	SPACE HEATING	SPACE COOLING	HEAT REJECT	PUMPS & AUX	VENT FANS	REFRIG DISPLAY	HT PUMP SUPPLEM	DOMEST HOT WTR	EXT USAGE	TOTAL
JAN													
MBTU	0.	0.	3.	90.	0.	0.	0.	0.	0.	0.	23.	0.	116.
MAX MBTU/HR	0.0	0.0	0.0	1.1	0.0	0.0	0.0	0.0	0.0	0.0	0.1	0.0	1.1
DAY/HR	0/ 0	0/ 0	2/10	22/ 9	0/ 0	0/ 0	0/ 0	0/ 0	0/ 0	0/ 0	22/13	0/ 0	22/ 9
PEAK ENDUSE	0.0	0.0	0.0	1.1	0.0	0.0	0.0	0.0	0.0	0.0	0.0	0.0	
PEAK PCT	0.0	0.0	0.5	96.8	0.0	0.0	0.0	0.0	0.0	0.0	2.8	0.0	
FEB													
MBTU	0.	0.	3.	89.	0.	0.	0.	0.	0.	0.	22.	0.	113.
MAX MBTU/HR	0.0	0.0	0.0	1.1	0.0	0.0	0.0	0.0	0.0	0.0	0.1	0.0	1.1
DAY/HR	0/ 0	0/ 0	1/10	12/ 9	0/ 0	0/ 0	0/ 0	0/ 0	0/ 0	0/ 0	6/13	0/ 0	12/ 9
PEAK ENDUSE	0.0	0.0	0.0	1.1	0.0	0.0	0.0	0.0	0.0	0.0	0.0	0.0	
PEAK PCT	0.0	0.0	0.5	96.7	0.0	0.0	0.0	0.0	0.0	0.0	2.9	0.0	
MAR													
MBTU	0.	0.	3.	39.	0.	0.	0.	0.	0.	0.	24.	0.	66.
MAX MBTU/HR	0.0	0.0	0.0	0.6	0.0	0.0	0.0	0.0	0.0	0.0	0.1	0.0	0.7
DAY/HR	0/ 0	0/ 0	1/10	5/ 8	0/ 0	0/ 0	0/ 0	0/ 0	0/ 0	0/ 0	9/13	0/ 0	5/ 8
PEAK ENDUSE	0.0	0.0	0.0	0.6	0.0	0.0	0.0	0.0	0.0	0.0	0.0	0.0	
PEAK PCT	0.0	0.0	0.7	93.8	0.0	0.0	0.0	0.0	0.0	0.0	5.5	0.0	
APR													
MBTU	0.	0.	3.	13.	0.	0.	0.	0.	0.	0.	23.	0.	39.
MAX MBTU/HR	0.0	0.0	0.0	0.4	0.0	0.0	0.0	0.0	0.0	0.0	0.1	0.0	0.4
DAY/HR	0/ 0	0/ 0	2/10	2/ 8	0/ 0	0/ 0	0/ 0	0/ 0	0/ 0	0/ 0	2/13	0/ 0	2/ 8
PEAK ENDUSE	0.0	0.0	0.0	0.4	0.0	0.0	0.0	0.0	0.0	0.0	0.0	0.0	
PEAK PCT	0.0	0.0	1.1	90.9	0.0	0.0	0.0	0.0	0.0	0.0	8.0	0.0	
MAY													
MBTU	0.	0.	3.	4.	0.	0.	0.	0.	0.	0.	21.	0.	28.
MAX MBTU/HR	0.0	0.0	0.0	0.2	0.0	0.0	0.0	0.0	0.0	0.0	0.1	0.0	0.2
DAY/HR	0/ 0	0/ 0	1/10	7/ 8	0/ 0	0/ 0	0/ 0	0/ 0	0/ 0	0/ 0	19/13	0/ 0	7/ 8
PEAK ENDUSE	0.0	0.0	0.0	0.2	0.0	0.0	0.0	0.0	0.0	0.0	0.0	0.0	
PEAK PCT	0.0	0.0	2.1	83.4	0.0	0.0	0.0	0.0	0.0	0.0	14.5	0.0	
JUN													
MBTU	0.	0.	3.	0.	0.	0.	0.	0.	0.	0.	18.	0.	22.
MAX MBTU/HR	0.0	0.0	0.0	0.0	0.0	0.0	0.0	0.0	0.0	0.0	0.1	0.0	0.1
DAY/HR	0/ 0	0/ 0	1/10	0/ 0	0/ 0	0/ 0	0/ 0	0/ 0	0/ 0	0/ 0	6/13	0/ 0	6/13
PEAK ENDUSE	0.0	0.0	0.0	0.0	0.0	0.0	0.0	0.0	0.0	0.0	0.1	0.0	
PEAK PCT	0.0	0.0	7.8	0.0	0.0	0.0	0.0	0.0	0.0	0.0	92.2	0.0	
JUL													
MBTU	0.	0.	3.	0.	0.	0.	0.	0.	0.	0.	17.	0.	21.
MAX MBTU/HR	0.0	0.0	0.0	0.0	0.0	0.0	0.0	0.0	0.0	0.0	0.1	0.0	0.1
DAY/HR	0/ 0	0/ 0	2/10	0/ 0	0/ 0	0/ 0	0/ 0	0/ 0	0/ 0	0/ 0	15/13	0/ 0	18/13
PEAK ENDUSE	0.0	0.0	0.0	0.0	0.0	0.0	0.0	0.0	0.0	0.0	0.1	0.0	
PEAK PCT	0.0	0.0	8.5	0.0	0.0	0.0	0.0	0.0	0.0	0.0	91.5	0.0	
AUG													
MBTU	0.	0.	3.	0.	0.	0.	0.	0.	0.	0.	16.	0.	19.
MAX MBTU/HR	0.0	0.0	0.0	0.0	0.0	0.0	0.0	0.0	0.0	0.0	0.1	0.0	0.1
DAY/HR	0/ 0	0/ 0	1/10	0/ 0	0/ 0	0/ 0	0/ 0	0/ 0	0/ 0	0/ 0	19/13	0/ 0	20/13
PEAK ENDUSE	0.0	0.0	0.0	0.0	0.0	0.0	0.0	0.0	0.0	0.0	0.1	0.0	
PEAK PCT	0.0	0.0	9.0	0.0	0.0	0.0	0.0	0.0	0.0	0.0	91.0	0.0	

REPORT- PS-E Energy End-Use Summary for all Fuel Meters WEATHER FILE- NEW YORK LAGUARDI NY

(CONTINUED)

SEP													
MBTU	0.	0.	3.	0.	0.	0.	0.	0.	0.	0.	16.	0.	19.
MAX MBTU/HR	0.0	0.0	0.0	0.0	0.0	0.0	0.0	0.0	0.0	0.0	0.1	0.0	0.1
DAY/HR	0/ 0	0/ 0	4/10	0/ 0	0/ 0	0/ 0	0/ 0	0/ 0	0/ 0	0/ 0	30/13	0/ 0	14/13
PEAK ENDUSE	0.0	0.0	0.0	0.0	0.0	0.0	0.0	0.0	0.0	0.0	0.1	0.0	
PEAK PCT	0.0	0.0	9.0	0.0	0.0	0.0	0.0	0.0	0.0	0.0	91.0	0.0	
OCT													
MBTU	0.	0.	3.	11.	0.	0.	0.	0.	0.	0.	17.	0.	31.
MAX MBTU/HR	0.0	0.0	0.0	0.4	0.0	0.0	0.0	0.0	0.0	0.0	0.1	0.0	0.4
DAY/HR	0/ 0	0/ 0	1/10	29/ 8	0/ 0	0/ 0	0/ 0	0/ 0	0/ 0	0/ 0	28/13	0/ 0	29/ 8
PEAK ENDUSE	0.0	0.0	0.0	0.4	0.0	0.0	0.0	0.0	0.0	0.0	0.0	0.0	
PEAK PCT	0.0	0.0	1.2	92.4	0.0	0.0	0.0	0.0	0.0	0.0	6.4	0.0	
NOV													
MBTU	0.	0.	3.	31.	0.	0.	0.	0.	0.	0.	18.	0.	52.
MAX MBTU/HR	0.0	0.0	0.0	0.6	0.0	0.0	0.0	0.0	0.0	0.0	0.1	0.0	0.6
DAY/HR	0/ 0	0/ 0	1/10	26/ 8	0/ 0	0/ 0	0/ 0	0/ 0	0/ 0	0/ 0	27/13	0/ 0	26/ 8
PEAK ENDUSE	0.0	0.0	0.0	0.6	0.0	0.0	0.0	0.0	0.0	0.0	0.0	0.0	
PEAK PCT	0.0	0.0	0.8	94.8	0.0	0.0	0.0	0.0	0.0	0.0	4.5	0.0	
DEC													
MBTU	0.	0.	3.	56.	0.	0.	0.	0.	0.	0.	21.	0.	80.
MAX MBTU/HR	0.0	0.0	0.0	0.8	0.0	0.0	0.0	0.0	0.0	0.0	0.1	0.0	0.8
DAY/HR	0/ 0	0/ 0	3/10	3/ 9	0/ 0	0/ 0	0/ 0	0/ 0	0/ 0	0/ 0	6/13	0/ 0	3/ 8
PEAK ENDUSE	0.0	0.0	0.0	0.8	0.0	0.0	0.0	0.0	0.0	0.0	0.0	0.0	
PEAK PCT	0.0	0.0	0.6	95.7	0.0	0.0	0.0	0.0	0.0	0.0	3.7	0.0	
	=======	=======	=======	=======	=======	=======	=======	=======	=======	=======	=======	=======	========
MBTU	0.	0.	38.	331.	0.	0.	0.	0.	0.	0.	236.	0.	605.
MAX MBTU/HR	0.0	0.0	0.0	1.1	0.0	0.0	0.0	0.0	0.0	0.0	0.1	0.0	1.1
MON/DY	0/ 0	0/ 0	1/ 2	2/12	0/ 0	0/ 0	0/ 0	0/ 0	0/ 0	0/ 0	3/ 9	0/ 0	2/12
PEAK ENDUSE	0.0	0.0	0.0	1.1	0.0	0.0	0.0	0.0	0.0	0.0	0.0	0.0	
PEAK PCT	0.0	0.0	0.5	96.7	0.0	0.0	0.0	0.0	0.0	0.0	2.9	0.0	

REPORT- LV-B Summary of Spaces WEATHER FILE- NEW YORK LAGUARDI NY

NUMBER OF SPACES 121 EXTERIOR 97 INTERIOR 24

SPACE	SPACE*FLOOR MULTIPLIER	SPACE TYPE	AZIM	LIGHTS (WATT / SQFT)	PEOPLE	EQUIP (WATT / SQFT)	INFILTRATION METHOD	ACH	AREA (SQFT)	VOLUME (CUFT)
Spaces on floor: Cellar										
STRS C-C	1.0	INT	0.0	0.69	11.4	0.00	AIR-CHANGE	0.15	262.3	2688.6
STRS B-C	1.0	INT	0.0	0.69	1.1	0.00	AIR-CHANGE	0.15	333.4	3417.4
WATER C01	1.0	INT	0.0	0.95	2.8	0.00	AIR-CHANGE	0.15	852.0	8732.8
ELEC C02	1.0	INT	0.0	0.95	2.4	0.00	AIR-CHANGE	0.15	707.6	7253.0
CORR Cellar	1.0	INT	0.0	0.66	4.2	0.00	AIR-CHANGE	0.15	1274.2	13060.8
Spaces on floor: 1st Floor										
STRS A-1	1.0	EXT	0.0	0.69	1.1	0.00	AIR-CHANGE	0.15	336.2	4706.7
CR 102	1.0	EXT	0.0	1.12	41.8	1.52	AIR-CHANGE	0.15	960.8	9608.4
STOR 103	1.0	EXT	0.0	0.57	0.3	0.00	AIR-CHANGE	0.15	86.3	862.8
OFF 104	1.0	EXT	0.0	1.12	3.4	5.30	AIR-CHANGE	0.15	341.6	3416.2
OFF 106	1.0	EXT	0.0	1.12	5.3	5.30	AIR-CHANGE	0.15	526.6	5265.9
V-1	1.0	EXT	0.0	0.66	0.6	0.00	NO-INFILT.	0.00	192.2	1922.3
Caf 108	1.0	EXT	0.0	0.65	130.6	0.25	AIR-CHANGE	0.15	2253.2	22532.1
RR 108	1.0	EXT	0.0	0.98	0.9	0.00	AIR-CHANGE	0.15	263.2	2632.5
CORR-BOH	1.0	EXT	0.0	0.66	1.1	0.00	AIR-CHANGE	0.15	323.0	3230.0
RR 115	1.0	EXT	0.0	0.98	0.3	0.00	AIR-CHANGE	0.15	91.7	917.4
STRS C-1	1.0	EXT	0.0	0.69	0.6	0.00	AIR-CHANGE	0.15	171.5	2400.7
STOR 115	1.0	EXT	0.0	0.57	1.2	0.00	AIR-CHANGE	0.15	372.8	3728.0
KITCH 115	1.0	EXT	0.0	0.99	7.7	7.71	AIR-CHANGE	0.15	1541.4	15413.7
STRS B-1	1.0	EXT	0.0	0.69	0.8	0.00	AIR-CHANGE	0.15	250.8	3511.2
MTNG 109	1.0	EXT	0.0	1.11	2.9	5.30	AIR-CHANGE	0.15	293.0	2930.5
ELEV-1	1.0	EXT	0.0	0.00	0.0	0.00	AIR-CHANGE	0.15	193.5	2709.0
Nurse 107	1.0	EXT	0.0	1.12	5.0	5.30	AIR-CHANGE	0.15	499.2	4992.3
CR 105	1.0	EXT	0.0	1.12	38.9	1.52	AIR-CHANGE	0.15	894.7	8947.4
RRs 101,3,5	1.0	EXT	0.0	0.98	0.8	0.00	AIR-CHANGE	0.15	231.0	2309.9
CR 101	1.0	EXT	0.0	1.12	41.1	1.52	AIR-CHANGE	0.15	945.2	9451.8
CORR-CR	1.0	INT	0.0	0.66	2.1	0.00	AIR-CHANGE	0.15	636.6	6366.5
RR 102,4	1.0	INT	0.0	0.98	0.5	0.00	AIR-CHANGE	0.15	148.8	1487.5
JC 113	1.0	INT	0.0	0.57	0.2	0.00	AIR-CHANGE	0.15	54.8	547.5
STOR 111	1.0	INT	0.0	0.57	0.4	0.00	AIR-CHANGE	0.15	122.4	1224.0
STOR 112	1.0	INT	0.0	0.57	0.5	0.00	AIR-CHANGE	0.15	151.6	1515.9
LCKR 115	1.0	INT	0.0	0.68	0.5	0.00	AIR-CHANGE	0.15	162.2	1622.2
LOBBY	1.0	INT	0.0	0.66	2.1	0.00	AIR-CHANGE	0.15	620.1	6200.6
CORR Elev	1.0	EXT	0.0	0.66	2.3	0.00	AIR-CHANGE	0.15	678.5	6785.0
1st Floor Plenum	1.0	EXT	0.0	0.00	0.0	0.00	NO-INFILT.	0.00	12392.8	49571.0
Spaces on floor: 2nd Floor										
STRS A-2	1.0	EXT	0.0	0.69	0.8	0.00	AIR-CHANGE	0.15	252.5	3282.4
STRS B-2	1.0	EXT	0.0	0.69	1.0	0.00	AIR-CHANGE	0.15	290.4	3775.2
STRS C-2	1.0	EXT	0.0	0.69	0.6	0.00	AIR-CHANGE	0.15	171.5	4458.4
ELEV-2	1.0	EXT	0.0	0.00	0.0	0.00	AIR-CHANGE	0.15	193.5	2515.5

REPORT- LV-B Summary of Spaces WEATHER FILE- NEW YORK LAGUARDI NY

(CONTINUED)

CR 202	1.0	EXT	0.0	1.12	42.3	1.52	AIR-CHANGE	0.15	974.0	9740.5
CR 204	1.0	EXT	0.0	1.12	42.0	1.52	AIR-CHANGE	0.15	965.0	9650.2
CR 206	1.0	EXT	0.0	1.12	16.0	1.52	AIR-CHANGE	0.15	368.5	3684.5
CR 210	1.0	EXT	0.0	1.12	40.0	1.52	AIR-CHANGE	0.15	919.5	9194.8
OFF 216	1.0	EXT	0.0	1.12	0.7	5.30	AIR-CHANGE	0.15	66.3	663.4
GYM 216	1.0	EXT	0.0	1.20	168.8	0.25	AIR-CHANGE	0.15	2911.5	75699.5
STAGE 216	1.0	EXT	0.0	1.20	51.5	0.25	AIR-CHANGE	0.15	888.1	23089.6
RR JC 2	1.0	EXT	0.0	0.98	1.5	0.00	AIR-CHANGE	0.15	453.1	4531.3
CR 201	1.0	EXT	0.0	1.12	33.6	1.52	AIR-CHANGE	0.15	773.7	7736.9
CR 203	1.0	EXT	0.0	1.12	33.7	1.52	AIR-CHANGE	0.15	775.0	7749.9
CR 205	1.0	EXT	0.0	1.12	33.1	1.52	AIR-CHANGE	0.15	760.7	7606.6
STOR 207	1.0	EXT	0.0	0.57	0.6	0.00	AIR-CHANGE	0.15	192.7	1927.5
IDF 209	1.0	INT	0.0	0.95	0.3	7.50	AIR-CHANGE	0.15	101.4	1013.6
RR 211	1.0	INT	0.0	0.98	0.2	0.00	AIR-CHANGE	0.15	67.0	670.0
STOR 212	1.0	INT	0.0	0.57	0.6	0.00	AIR-CHANGE	0.15	188.6	1886.3
RR 208-210	1.0	INT	0.0	0.98	0.5	0.00	AIR-CHANGE	0.15	160.0	1599.6
RR 202 204	1.0	INT	0.0	0.98	0.4	0.00	AIR-CHANGE	0.15	126.1	1261.2
CORR-2	1.0	EXT	0.0	0.66	5.2	0.00	AIR-CHANGE	0.15	1561.8	15618.4
2nd Floor Plenum	1.0	EXT	0.0	0.00	0.0	0.00	NO-INFILT.	0.00	8637.3	25911.8
UC-N 2	1.0	EXT	0.0	0.00	0.0	0.00	NO-INFILT.	0.00	38.0	380.3
UC-E 2	1.0	INT	0.0	0.00	0.0	0.00	NO-INFILT.	0.00	53.3	533.2

Spaces on floor: 3rd Floor

STRS A-3	1.0	EXT	0.0	0.69	0.8	0.00	AIR-CHANGE	0.15	252.5	3282.4
STRS B-3	1.0	EXT	0.0	0.69	1.0	0.00	AIR-CHANGE	0.15	290.4	3775.2
ELEV-3	1.0	EXT	0.0	0.00	0.0	0.00	AIR-CHANGE	0.15	193.5	2515.5
RR JC 3	1.0	EXT	0.0	0.98	1.5	0.00	AIR-CHANGE	0.15	453.1	4531.3
RR 309	1.0	INT	0.0	0.98	0.2	0.00	AIR-CHANGE	0.15	67.0	670.0
CORR-3	1.0	EXT	0.0	0.66	5.2	0.00	AIR-CHANGE	0.15	1561.8	15618.4
CR 302	1.0	EXT	0.0	1.12	33.6	1.52	AIR-CHANGE	0.15	772.5	7725.5
CR 304	1.0	EXT	0.0	1.12	34.0	1.52	AIR-CHANGE	0.15	781.1	7811.1
CR 306	1.0	EXT	0.0	1.12	34.2	1.52	AIR-CHANGE	0.15	786.6	7866.4
EXERCISE 310	1.0	EXT	0.0	1.20	25.4	0.00	AIR-CHANGE	0.15	1268.6	12685.9
OFF 308	1.0	INT	0.0	1.12	1.6	5.30	AIR-CHANGE	0.15	164.1	1640.5
CR 301	1.0	EXT	0.0	1.12	33.6	1.52	AIR-CHANGE	0.15	773.7	7736.9
CR 303	1.0	EXT	0.0	1.12	33.7	1.52	AIR-CHANGE	0.15	775.0	7749.9
CR 305	1.0	EXT	0.0	1.12	33.1	1.52	AIR-CHANGE	0.15	760.7	7606.6
STOR 307	1.0	EXT	0.0	0.57	1.0	0.00	AIR-CHANGE	0.15	303.3	3032.8
UC-N 3	1.0	EXT	0.0	0.00	0.0	0.00	NO-INFILT.	0.00	28.9	288.6
UC-E 3	1.0	INT	0.0	0.00	0.0	0.00	NO-INFILT.	0.00	48.1	481.2
3rd Floor Plenum	1.0	EXT	0.0	0.00	0.0	0.00	NO-INFILT.	0.00	8637.3	25911.8

Spaces on floor: 4th Floor

STRS A-4	1.0	EXT	0.0	0.69	0.8	0.00	AIR-CHANGE	0.15	252.5	3282.4
STRS B-4	1.0	EXT	0.0	0.69	1.0	0.00	AIR-CHANGE	0.15	290.4	3775.2
STRS C-4	1.0	EXT	0.0	0.69	0.6	0.00	AIR-CHANGE	0.15	171.5	2229.2
ELEV-4	1.0	EXT	0.0	0.00	0.0	0.00	AIR-CHANGE	0.15	193.5	2515.5
CR 402	1.0	EXT	0.0	1.12	33.6	1.52	AIR-CHANGE	0.15	772.5	7725.5
CR 404	1.0	EXT	0.0	1.12	34.0	1.52	AIR-CHANGE	0.15	781.1	7811.1
CR 406	1.0	EXT	0.0	1.12	36.5	1.52	AIR-CHANGE	0.15	840.6	8405.6
RR JC 4	1.0	EXT	0.0	0.98	1.5	0.00	AIR-CHANGE	0.15	453.1	4531.3
RR 413	1.0	INT	0.0	0.98	0.2	0.00	AIR-CHANGE	0.15	67.0	670.0
MDF 411	1.0	EXT	0.0	0.95	1.0	7.50	AIR-CHANGE	0.15	303.3	3032.8
CORR-4	1.0	EXT	0.0	0.66	5.2	0.00	AIR-CHANGE	0.15	1561.8	15618.4
PROJECT 408	1.0	EXT	0.0	1.11	12.2	5.30	AIR-CHANGE	0.15	1215.0	12150.4

REPORT- LV-B Summary of Spaces WEATHER FILE- NEW YORK LAGUARDI NY

(CONTINUED)

STOR 410	1.0	EXT	0.0	0.57	0.5	0.00	AIR-CHANGE	0.15	163.7	1636.8
STOR 409	1.0	EXT	0.0	0.57	1.1	0.00	AIR-CHANGE	0.15	325.6	3256.2
OFF 407	1.0	EXT	0.0	1.12	5.5	5.30	AIR-CHANGE	0.15	548.4	5483.5
CR 405	1.0	EXT	0.0	1.12	21.6	1.52	AIR-CHANGE	0.15	496.3	4962.5
WORKRM 403	1.0	EXT	0.0	1.11	4.6	5.30	AIR-CHANGE	0.15	461.1	4610.9
BREAK 401	1.0	EXT	0.0	0.66	4.8	5.30	AIR-CHANGE	0.15	478.0	4780.2
UC-N 4	1.0	EXT	0.0	0.00	0.0	0.00	NO-INFILT.	0.00	28.9	288.6
UC-E 4	1.0	EXT	0.0	0.00	0.0	0.00	NO-INFILT.	0.00	48.1	481.2
4th Floor Plenum	1.0	EXT	0.0	0.00	0.0	0.00	NO-INFILT.	0.00	8637.3	25911.8
Spaces on floor: 5th Floor										
STRS A-5	1.0	EXT	0.0	0.69	0.8	0.00	AIR-CHANGE	0.15	252.5	4039.9
STRS B-5	1.0	EXT	0.0	0.69	1.0	0.00	AIR-CHANGE	0.15	290.4	4646.4
ELEV-5	1.0	EXT	0.0	0.00	0.0	0.00	AIR-CHANGE	0.15	193.5	3096.0
CR 502	1.0	EXT	0.0	1.12	33.6	1.52	AIR-CHANGE	0.15	772.5	7725.5
CR 504	1.0	EXT	0.0	1.12	34.0	1.52	AIR-CHANGE	0.15	781.1	7811.1
CR 506	1.0	EXT	0.0	1.12	34.2	1.52	AIR-CHANGE	0.15	786.6	7866.4
RR JC 5	1.0	EXT	0.0	0.98	1.5	0.00	AIR-CHANGE	0.15	453.1	4531.3
RR 511	1.0	INT	0.0	0.98	0.2	0.00	AIR-CHANGE	0.15	67.0	670.0
STOR 509	1.0	EXT	0.0	0.57	1.0	0.00	AIR-CHANGE	0.15	303.3	3032.8
CR 510	1.0	EXT	0.0	1.12	23.8	1.52	AIR-CHANGE	0.15	547.5	5475.2
CR 508	1.0	EXT	0.0	1.12	38.5	1.52	AIR-CHANGE	0.15	885.1	8851.2
CORR-5	1.0	EXT	0.0	0.66	5.2	0.00	AIR-CHANGE	0.15	1561.8	15618.4
CUSTODIAL 505	1.0	EXT	0.0	1.59	6.7	5.30	AIR-CHANGE	0.15	673.3	6733.4
LOCKR 507	1.0	INT	0.0	0.68	0.7	0.00	AIR-CHANGE	0.15	200.6	2006.4
RESOURCE 503	1.0	EXT	0.0	1.11	4.4	5.30	AIR-CHANGE	0.15	441.5	4415.5
LIB 501	1.0	EXT	0.0	1.24	17.3	1.52	AIR-CHANGE	0.15	993.8	9938.1
UC-N 5	1.0	EXT	0.0	0.00	0.0	0.00	NO-INFILT.	0.00	28.9	288.6
UC-E 5	1.0	EXT	0.0	0.00	0.0	0.00	NO-INFILT.	0.00	48.1	481.2
5th Floor Plenum	1.0	EXT	0.0	0.00	0.0	0.00	NO-INFILT.	0.00	8637.3	51823.6
Spaces on floor: PH Floor										
ELEV-PH	1.0	EXT	0.0	0.00	0.0	0.00	AIR-CHANGE	0.15	324.0	4212.0
MECH	1.0	EXT	0.0	0.95	3.5	0.00	AIR-CHANGE	0.15	1053.8	10537.8
STOR-PH	1.0	EXT	0.0	0.57	0.5	0.00	AIR-CHANGE	0.15	151.6	1516.3
STRS A-PH	1.0	EXT	0.0	0.69	1.0	0.00	AIR-CHANGE	0.15	304.7	3047.4
BUILDING TOTALS					1400.0				106814.9	858595.7

NUMBER OF EXTERIOR SURFACES 181
(U-VALUE INCLUDES OUTSIDE FILM; WINDOW INCLUDES FRAME AND CURB, IF DEFINED)

SURFACE	- - - W I N D O W S - - - U-VALUE (BTU/HR-SQFT-F)	AREA (SQFT)	- - - - W A L L - - - - U-VALUE (BTU/HR-SQFT-F)	AREA (SQFT)	-W A L L + W I N D O W S- U-VALUE (BTU/HR-SQFT-F)	AREA (SQFT)	AZIMUTH
Exterior Wall 2	0.000	0.00	0.062	506.10	0.062	506.10	NORTH
in space: STRS A-1							
Exterior Wall 18	0.000	0.00	0.062	73.00	0.062	73.00	NORTH
in space: KITCH 115							
Exterior Wall 27	0.000	0.00	0.062	265.50	0.062	265.50	NORTH
in space: CR 101							
Exterior Wall 33	0.000	0.00	0.062	29.20	0.062	29.20	NORTH
in space: 1st Floor Plenum							
Exterior Wall 37	0.000	0.00	0.062	106.20	0.062	106.20	NORTH
in space: 1st Floor Plenum							
Exterior Wall 39	0.000	0.00	0.062	352.95	0.062	352.95	NORTH
in space: STRS A-2							
Exterior Wall 52	0.000	0.00	0.062	189.80	0.062	189.80	NORTH
in space: STAGE 216							
Exterior Wall 56	0.000	0.00	0.062	260.50	0.062	260.50	NORTH
in space: CR 201							
Exterior Wall 60	0.000	0.00	0.062	95.00	0.062	95.00	NORTH
in space: CORR-2							
Exterior Wall 67	0.000	0.00	0.062	106.65	0.062	106.65	NORTH
in space: 2nd Floor Plenum							
Exterior Wall 69	0.000	0.00	0.062	352.95	0.062	352.95	NORTH
in space: STRS A-3							
Exterior Wall 74	0.000	0.00	0.062	95.00	0.062	95.00	NORTH
in space: CORR-3							
Exterior Wall 83	0.000	0.00	0.062	260.50	0.062	260.50	NORTH
in space: CR 301							
Exterior Wall 92	0.000	0.00	0.062	106.65	0.062	106.65	NORTH
in space: 3rd Floor Plenum							
Exterior Wall 102	0.000	0.00	0.062	352.95	0.062	352.95	NORTH
in space: STRS A-4							
Exterior Wall 107	0.000	0.00	0.062	234.65	0.062	234.65	NORTH
in space: STRS C-4							
Exterior Wall 114	0.000	0.00	0.062	95.00	0.062	95.00	NORTH
in space: CORR-4							
Exterior Wall 125	0.000	0.00	0.062	260.50	0.062	260.50	NORTH
in space: BREAK 401							
Exterior Wall 100	0.000	0.00	0.062	106.65	0.062	106.65	NORTH
in space: 4th Floor Plenum							
Exterior Wall 131	0.000	0.00	0.062	434.40	0.062	434.40	NORTH
in space: STRS A-5							
Exterior Wall 143	0.000	0.00	0.062	95.00	0.062	95.00	NORTH
in space: CORR-5							
Exterior Wall 149	0.000	0.00	0.062	260.50	0.062	260.50	NORTH
in space: LIB 501							
Exterior Wall 160	0.000	0.00	0.062	213.30	0.062	213.30	NORTH
in space: 5th Floor Plenum							
Exterior Wall 162	0.000	0.00	0.062	263.25	0.062	263.25	NORTH
in space: ELEV-PH							

REPORT- LV-D Details of Exterior Surfaces WEATHER FILE- NEW YORK LAGUARDI NY

(CONTINUED)

Exterior Wall 168	0.000	0.00	0.062	345.50	0.062	345.50	NORTH
in space: MECH							
Exterior Wall 171	0.000	0.00	0.062	221.00	0.062	221.00	NORTH
in space: STRS A-PH							
Exterior Wall 54	0.544	20.25	0.062	160.25	0.116	180.50	EAST
in space: RR JC 2							
Exterior Wall 55	0.544	101.25	0.062	195.75	0.227	297.00	EAST
in space: CR 201							
Exterior Wall 22	0.000	0.00	0.062	140.00	0.062	140.00	EAST
in space: ELEV-1							
Exterior Wall 57	0.544	101.25	0.062	196.25	0.226	297.50	EAST
in space: CR 203							
Exterior Wall 58	0.544	101.25	0.062	190.75	0.229	292.00	EAST
in space: CR 205							
Exterior Wall 59	0.000	0.00	0.062	88.50	0.062	88.50	EAST
in space: STOR 207							
Exterior Wall 23	0.544	20.25	0.062	213.75	0.104	234.00	EAST
in space: Nurse 107							
Exterior Wall 61	0.544	20.25	0.062	64.75	0.177	85.00	EAST
in space: CORR-2							
Exterior Wall 65	0.000	0.00	0.062	79.65	0.062	79.65	EAST
in space: 2nd Floor Plenum							
Exterior Wall 66	0.000	0.00	0.062	304.20	0.062	304.20	EAST
in space: 2nd Floor Plenum							
Exterior Wall 24	0.544	121.50	0.062	215.50	0.236	337.00	EAST
in space: CR 105							
Exterior Wall 62	0.000	0.00	0.062	39.00	0.062	39.00	EAST
in space: UC-N 2							
Exterior Wall 25	0.000	0.00	0.062	87.00	0.062	87.00	EAST
in space: RRs 101,3,5							
Exterior Wall 70	0.544	9.00	0.062	147.00	0.090	156.00	EAST
in space: STRS B-3							
Exterior Wall 71	0.000	0.00	0.062	130.00	0.062	130.00	EAST
in space: ELEV-3							
Exterior Wall 73	0.544	20.25	0.062	160.25	0.116	180.50	EAST
in space: RR JC 3							
Exterior Wall 26	0.544	121.50	0.062	234.50	0.227	356.00	EAST
in space: CR 101							
Exterior Wall 75	0.544	20.25	0.062	64.75	0.177	85.00	EAST
in space: CORR-3							
Exterior Wall 82	0.544	101.25	0.062	195.75	0.227	297.00	EAST
in space: CR 301							
Exterior Wall 16	0.000	0.00	0.062	116.00	0.062	116.00	EAST
in space: STOR 115							
Exterior Wall 84	0.544	101.25	0.062	196.25	0.226	297.50	EAST
in space: CR 303							
Exterior Wall 85	0.544	101.25	0.062	190.75	0.229	292.00	EAST
in space: CR 305							
Exterior Wall 86	0.000	0.00	0.062	88.50	0.062	88.50	EAST
in space: STOR 307							
Exterior Wall 87	0.000	0.00	0.062	39.00	0.062	39.00	EAST
in space: UC-N 3							
Exterior Wall 90	0.000	0.00	0.062	79.65	0.062	79.65	EAST
in space: 3rd Floor Plenum							
Exterior Wall 91	0.000	0.00	0.062	304.20	0.062	304.20	EAST
in space: 3rd Floor Plenum							
Exterior Wall 28	0.544	20.25	0.062	64.75	0.177	85.00	EAST
in space: CORR Elev							

REPORT- LV-D Details of Exterior Surfaces WEATHER FILE- NEW YORK LAGUARDI NY

(CONTINUED)

Exterior Wall 31	0.000	0.00	0.062	46.40	0.062	46.40	EAST
in space: 1st Floor Plenum							
Exterior Wall 103	0.544	9.00	0.062	147.00	0.090	156.00	EAST
in space: STRS B-4							
Exterior Wall 106	0.000	0.00	0.062	123.50	0.062	123.50	EAST
in space: STRS C-4							
Exterior Wall 32	0.000	0.00	0.062	150.40	0.062	150.40	EAST
in space: 1st Floor Plenum							
Exterior Wall 109	0.000	0.00	0.062	130.00	0.062	130.00	EAST
in space: ELEV-4							
Exterior Wall 129	0.544	20.25	0.062	160.25	0.116	180.50	EAST
in space: RR JC 4							
Exterior Wall 113	0.000	0.00	0.062	88.50	0.062	88.50	EAST
in space: MDF 411							
Exterior Wall 17	0.000	0.00	0.062	376.00	0.062	376.00	EAST
in space: KITCH 115							
Exterior Wall 116	0.544	20.25	0.062	64.75	0.177	85.00	EAST
in space: CORR-4							
Exterior Wall 120	0.000	0.00	0.062	125.00	0.062	125.00	EAST
in space: STOR 409							
Exterior Wall 121	0.544	40.50	0.062	170.00	0.155	210.50	EAST
in space: OFF 407							
Exterior Wall 122	0.544	60.75	0.062	129.75	0.216	190.50	EAST
in space: CR 405							
Exterior Wall 123	0.544	40.50	0.062	136.50	0.173	177.00	EAST
in space: WORKRM 403							
Exterior Wall 124	0.544	81.00	0.062	102.50	0.275	183.50	EAST
in space: BREAK 401							
Exterior Wall 35	0.000	0.00	0.062	106.20	0.062	106.20	EAST
in space: 1st Floor Plenum							
Exterior Wall 126	0.000	0.00	0.062	39.00	0.062	39.00	EAST
in space: UC-N 4							
Exterior Wall 98	0.000	0.00	0.062	79.65	0.062	79.65	EAST
in space: 4th Floor Plenum							
Exterior Wall 99	0.000	0.00	0.062	304.20	0.062	304.20	EAST
in space: 4th Floor Plenum							
Exterior Wall 36	0.000	0.00	0.062	405.60	0.062	405.60	EAST
in space: 1st Floor Plenum							
Exterior Wall 14	0.000	0.00	0.062	133.00	0.062	133.00	EAST
in space: STRS C-1							
Exterior Wall 132	0.000	0.00	0.062	192.00	0.062	192.00	EAST
in space: STRS B-5							
Exterior Wall 134	0.000	0.00	0.062	160.00	0.062	160.00	EAST
in space: ELEV-5							
Exterior Wall 139	0.544	20.25	0.062	160.25	0.116	180.50	EAST
in space: RR JC 5							
Exterior Wall 140	0.000	0.00	0.062	88.50	0.062	88.50	EAST
in space: STOR 509							
Exterior Wall 19	0.544	9.00	0.062	159.00	0.088	168.00	EAST
in space: STRS B-1							
Exterior Wall 145	0.544	20.25	0.062	64.75	0.177	85.00	EAST
in space: CORR-5							
Exterior Wall 146	0.544	101.25	0.062	234.25	0.208	335.50	EAST
in space: CUSTODIAL 505							
Exterior Wall 147	0.544	40.50	0.062	129.00	0.177	169.50	EAST
in space: RESOURCE 503							
Exterior Wall 148	0.544	121.50	0.062	260.00	0.216	381.50	EAST
in space: LIB 501							

REPORT- LV-D Details of Exterior Surfaces WEATHER FILE- NEW YORK LAGUARDI NY

(CONTINUED)

Exterior Wall 40	0.544	9.00	0.062	147.00	0.090	156.00	EAST
in space: STRS B-2							
Exterior Wall 150	0.000	0.00	0.062	39.00	0.062	39.00	EAST
in space: UC-N 5							
Exterior Wall 158	0.000	0.00	0.062	159.30	0.062	159.30	EAST
in space: 5th Floor Plenum							
Exterior Wall 159	0.000	0.00	0.062	608.40	0.062	608.40	EAST
in space: 5th Floor Plenum							
Exterior Wall 42	0.000	0.00	0.062	247.00	0.062	247.00	EAST
in space: STRS C-2							
Exterior Wall 161	0.000	0.00	0.062	208.00	0.062	208.00	EAST
in space: ELEV-PH							
Exterior Wall 43	0.000	0.00	0.062	130.00	0.062	130.00	EAST
in space: ELEV-2							
Exterior Wall 167	0.000	0.00	0.062	305.00	0.062	305.00	EAST
in space: MECH							
Exterior Wall 51	0.000	0.00	0.062	1279.20	0.062	1279.20	EAST
in space: STAGE 216							
Exterior Wall 20	0.544	60.75	0.062	119.75	0.224	180.50	EAST
in space: MTNG 109							
Exterior Wall 97	0.000	0.00	0.062	7.05	0.062	7.05	SOUTH
in space: 4th Floor Plenum							
Exterior Wall 105	0.000	0.00	0.062	234.65	0.062	234.65	SOUTH
in space: STRS C-4							
Exterior Wall 13	0.000	0.00	0.062	252.70	0.062	252.70	SOUTH
in space: STRS C-1							
Exterior Wall 64	0.000	0.00	0.062	7.05	0.062	7.05	SOUTH
in space: 2nd Floor Plenum							
Exterior Wall 11	0.000	0.00	0.062	340.00	0.062	340.00	SOUTH
in space: CORR-BOH							
Exterior Wall 128	0.000	0.00	0.062	23.50	0.062	23.50	SOUTH
in space: RR JC 4							
Exterior Wall 133	0.000	0.00	0.062	387.20	0.062	387.20	SOUTH
in space: STRS B-5							
Exterior Wall 53	0.000	0.00	0.062	23.50	0.062	23.50	SOUTH
in space: RR JC 2							
Exterior Wall 138	0.000	0.00	0.062	23.50	0.062	23.50	SOUTH
in space: RR JC 5							
Exterior Wall 30	0.000	0.00	0.062	198.40	0.062	198.40	SOUTH
in space: 1st Floor Plenum							
Exterior Wall 15	0.000	0.00	0.062	66.50	0.062	66.50	SOUTH
in space: STOR 115							
Exterior Wall 152	0.000	0.00	0.062	151.50	0.062	151.50	SOUTH
in space: CR 510							
Exterior Wall 115	0.000	0.00	0.062	85.00	0.062	85.00	SOUTH
in space: CORR-4							
Exterior Wall 144	0.000	0.00	0.062	85.00	0.062	85.00	SOUTH
in space: CORR-5							
Exterior Wall 12	0.000	0.00	0.062	89.50	0.062	89.50	SOUTH
in space: RR 115							
Exterior Wall 118	0.000	0.00	0.062	98.00	0.062	98.00	SOUTH
in space: PROJECT 408							
Exterior Wall 119	0.000	0.00	0.062	53.50	0.062	53.50	SOUTH
in space: STOR 410							
Exterior Wall 89	0.000	0.00	0.062	7.05	0.062	7.05	SOUTH
in space: 3rd Floor Plenum							
Exterior Wall 41	0.544	50.00	0.062	419.30	0.114	469.30	SOUTH
in space: STRS C-2							

(CONTINUED)

Exterior Wall 21	0.000	0.00	0.062	23.50	0.062	23.50	SOUTH
in space: MTNG 109							
Exterior Wall 151	0.000	0.00	0.062	125.00	0.062	125.00	SOUTH
in space: UC-E 5							
Exterior Wall 154	0.000	0.00	0.062	90.90	0.062	90.90	SOUTH
in space: 5th Floor Plenum							
Exterior Wall 155	0.000	0.00	0.062	75.00	0.062	75.00	SOUTH
in space: 5th Floor Plenum							
Exterior Wall 156	0.000	0.00	0.062	51.00	0.062	51.00	SOUTH
in space: 5th Floor Plenum							
Exterior Wall 157	0.000	0.00	0.062	14.10	0.062	14.10	SOUTH
in space: 5th Floor Plenum							
Exterior Wall 72	0.000	0.00	0.062	23.50	0.062	23.50	SOUTH
in space: RR JC 3							
Exterior Wall 34	0.000	0.00	0.062	9.40	0.062	9.40	SOUTH
in space: 1st Floor Plenum							
Exterior Wall 50	0.544	125.00	0.062	1164.60	0.109	1289.60	SOUTH
in space: GYM 216							
Exterior Wall 104	0.000	0.00	0.062	314.60	0.062	314.60	SOUTH
in space: STRS B-4							
Exterior Wall 127	0.000	0.00	0.062	125.00	0.062	125.00	SOUTH
in space: UC-E 4							
Exterior Wall 164	0.000	0.00	0.062	263.25	0.062	263.25	SOUTH
in space: ELEV-PH							
Exterior Wall 166	0.000	0.00	0.062	345.50	0.062	345.50	SOUTH
in space: MECH							
Exterior Wall 94	0.000	0.00	0.062	45.45	0.062	45.45	SOUTH
in space: 4th Floor Plenum							
Exterior Wall 95	0.000	0.00	0.062	37.50	0.062	37.50	SOUTH
in space: 4th Floor Plenum							
Exterior Wall 170	0.000	0.00	0.062	146.50	0.062	146.50	SOUTH
in space: STOR-PH							
Exterior Wall 96	0.000	0.00	0.062	25.50	0.062	25.50	SOUTH
in space: 4th Floor Plenum							
Exterior Wall 173	0.000	0.00	0.062	74.50	0.062	74.50	SOUTH
in space: STRS A-PH							
Exterior Wall 7	0.678	122.43	0.062	58.08	0.480	180.50	WEST
in space: V-1							
Exterior Wall 8	0.544	324.00	0.062	517.50	0.248	841.50	WEST
in space: Caf 108							
Exterior Wall 108	0.000	0.00	0.062	123.50	0.062	123.50	WEST
in space: STRS C-4							
Exterior Wall 9	0.000	0.00	0.062	130.00	0.062	130.00	WEST
in space: RR 108							
Exterior Wall 135	0.544	101.25	0.062	195.25	0.227	296.50	WEST
in space: CR 502							
Exterior Wall 136	0.544	101.25	0.062	181.25	0.235	282.50	WEST
in space: CR 504							
Exterior Wall 137	0.544	101.25	0.062	183.25	0.234	284.50	WEST
in space: CR 506							
Exterior Wall 110	0.544	101.25	0.062	195.25	0.227	296.50	WEST
in space: CR 402							
Exterior Wall 111	0.544	101.25	0.062	181.25	0.235	282.50	WEST
in space: CR 404							
Exterior Wall 112	0.544	101.25	0.062	202.75	0.223	304.00	WEST
in space: CR 406							
Exterior Wall 141	0.544	81.00	0.062	140.50	0.239	221.50	WEST
in space: CR 510							

REPORT- LV-D Details of Exterior Surfaces WEATHER FILE- NEW YORK LAGUARDI NY

(CONTINUED)

Exterior Wall 38	0.544	18.00	0.062	102.90	0.134	120.90	WEST
in space: STRS A-2							
Exterior Wall 142	0.544	81.00	0.062	240.50	0.184	321.50	WEST
in space: CR 508							
Exterior Wall 10	0.000	0.00	0.062	95.00	0.062	95.00	WEST
in space: CORR-BOH							
Exterior Wall 76	0.544	101.25	0.062	195.25	0.227	296.50	WEST
in space: CR 302							
Exterior Wall 77	0.544	101.25	0.062	181.25	0.235	282.50	WEST
in space: CR 304							
Exterior Wall 78	0.544	101.25	0.062	183.25	0.234	284.50	WEST
in space: CR 306							
Exterior Wall 79	0.000	0.00	0.062	105.50	0.062	105.50	WEST
in space: EXERCISE 310							
Exterior Wall 117	0.544	162.00	0.062	361.50	0.211	523.50	WEST
in space: PROJECT 408							
Exterior Wall 80	0.544	162.00	0.062	275.50	0.241	437.50	WEST
in space: EXERCISE 310							
Exterior Wall 29	0.000	0.00	0.062	797.40	0.062	797.40	WEST
in space: 1st Floor Plenum							
Exterior Wall 1	0.544	9.00	0.062	121.20	0.096	130.20	WEST
in space: STRS A-1							
Exterior Wall 153	0.000	0.00	0.062	843.90	0.062	843.90	WEST
in space: 5th Floor Plenum							
Exterior Wall 3	0.544	101.25	0.062	246.25	0.203	347.50	WEST
in space: CR 102							
Exterior Wall 4	0.000	0.00	0.062	85.00	0.062	85.00	WEST
in space: STOR 103							
Exterior Wall 44	0.544	121.50	0.062	268.00	0.213	389.50	WEST
in space: CR 202							
Exterior Wall 63	0.000	0.00	0.062	421.95	0.062	421.95	WEST
in space: 2nd Floor Plenum							
Exterior Wall 88	0.000	0.00	0.062	421.95	0.062	421.95	WEST
in space: 3rd Floor Plenum							
Exterior Wall 45	0.544	121.50	0.062	253.00	0.219	374.50	WEST
in space: CR 204							
Exterior Wall 46	0.544	40.50	0.062	120.00	0.184	160.50	WEST
in space: CR 206							
Exterior Wall 93	0.000	0.00	0.062	421.95	0.062	421.95	WEST
in space: 4th Floor Plenum							
Exterior Wall 47	0.544	121.50	0.062	249.00	0.220	370.50	WEST
in space: CR 210							
Exterior Wall 163	0.000	0.00	0.062	208.00	0.062	208.00	WEST
in space: ELEV-PH							
Exterior Wall 48	0.544	40.50	0.062	71.00	0.237	111.50	WEST
in space: OFF 216							
Exterior Wall 165	0.000	0.00	0.062	98.50	0.062	98.50	WEST
in space: MECH							
Exterior Wall 101	0.544	18.00	0.062	102.90	0.134	120.90	WEST
in space: STRS A-4							
Exterior Wall 49	0.544	150.00	0.062	1376.20	0.110	1526.20	WEST
in space: GYM 216							
Exterior Wall 68	0.544	18.00	0.062	102.90	0.134	120.90	WEST
in space: STRS A-3							
Exterior Wall 169	0.000	0.00	0.062	103.50	0.062	103.50	WEST
in space: STOR-PH							
Exterior Wall 5	0.544	60.75	0.062	83.75	0.265	144.50	WEST
in space: OFF 104							

REPORT- LV-D Details of Exterior Surfaces WEATHER FILE- NEW YORK LAGUARDI NY

(CONTINUED)

Exterior Wall 6	0.544	20.25	0.062	149.25	0.120	169.50	WEST
in space: OFF 106							
Exterior Wall 172	0.000	0.00	0.062	103.00	0.062	103.00	WEST
in space: STRS A-PH							
Exterior Wall 130	0.544	18.00	0.062	130.80	0.121	148.80	WEST
in space: STRS A-5							
Exterior Wall 175	0.000	0.00	0.047	2911.52	0.047	2911.52	ROOF
in space: GYM 216							
Exterior Wall 180	0.000	0.00	0.047	1053.77	0.047	1053.77	ROOF
in space: MECH							
Exterior Wall 176	0.000	0.00	0.047	171.48	0.047	171.48	ROOF
in space: STRS C-4							
Exterior Wall 179	0.000	0.00	0.047	324.00	0.047	324.00	ROOF
in space: ELEV-PH							
Exterior Wall 182	0.000	0.00	0.047	151.63	0.047	151.63	ROOF
in space: STOR-PH							
Exterior Wall 178	0.000	0.00	0.047	7249.13	0.047	7249.13	ROOF
in space: 5th Floor Plenum							
Exterior Wall 177	0.000	0.00	0.047	290.40	0.047	290.40	ROOF
in space: STRS B-5							
Exterior Wall 174	0.000	0.00	0.047	888.06	0.047	888.06	ROOF
in space: STAGE 216							
Exterior Wall 181	0.000	0.00	0.047	304.74	0.047	304.74	ROOF
in space: STRS A-PH							
Underground Wall 1	0.000	0.00	0.032	176.30	0.032	176.30	UNDERGRND
in space: STRS C-C							
Underground Wall 2	0.000	0.00	0.032	156.31	0.032	156.31	UNDERGRND
in space: STRS C-C							
Underground Wall 3	0.000	0.00	0.032	176.30	0.032	176.30	UNDERGRND
in space: STRS C-C							
Underground Wall 14	0.000	0.00	0.032	262.30	0.032	262.30	UNDERGRND
in space: STRS C-C							
Underground Wall 4	0.000	0.00	0.032	116.34	0.032	116.34	UNDERGRND
in space: STRS B-C							
Underground Wall 5	0.000	0.00	0.032	300.84	0.032	300.84	UNDERGRND
in space: STRS B-C							
Underground Wall 6	0.000	0.00	0.032	219.35	0.032	219.35	UNDERGRND
in space: STRS B-C							
Underground Wall 15	0.000	0.00	0.032	333.41	0.032	333.41	UNDERGRND
in space: STRS B-C							
Underground Wall 7	0.000	0.00	0.032	317.24	0.032	317.24	UNDERGRND
in space: WATER C01							
Underground Wall 8	0.000	0.00	0.032	282.39	0.032	282.39	UNDERGRND
in space: WATER C01							
Underground Wall 16	0.000	0.00	0.032	851.98	0.032	851.98	UNDERGRND
in space: WATER C01							
Underground Wall 9	0.000	0.00	0.032	234.72	0.032	234.72	UNDERGRND
in space: ELEC C02							
Underground Wall 17	0.000	0.00	0.032	707.61	0.032	707.61	UNDERGRND
in space: ELEC C02							
Underground Wall 10	0.000	0.00	0.032	205.51	0.032	205.51	UNDERGRND
in space: CORR Cellar							
Underground Wall 11	0.000	0.00	0.032	520.70	0.032	520.70	UNDERGRND
in space: CORR Cellar							
Underground Wall 12	0.000	0.00	0.032	121.97	0.032	121.97	UNDERGRND
in space: CORR Cellar							
Underground Wall 13	0.000	0.00	0.032	449.98	0.032	449.98	UNDERGRND
in space: CORR Cellar							
Underground Wall 18	0.000	0.00	0.032	1274.22	0.032	1274.22	UNDERGRND
in space: CORR Cellar							

REPORT- LV-D Details of Exterior Surfaces WEATHER FILE- NEW YORK LAGUARDI NY

(CONTINUED)

SURFACE	- - - W I N D O W S - - - U-VALUE (BTU/HR-SQFT-F)	AREA (SQFT)	- - - - W A L L - - - - U-VALUE (BTU/HR-SQFT-F)	AREA (SQFT)	-W A L L + W I N D O W S- U-VALUE (BTU/HR-SQFT-F)	AREA (SQFT)	AZIMUTH
Underground Wall 21 in space: STRS A-1	0.000	0.00	0.032	336.19	0.032	336.19	UNDERGRND
Underground Wall 22 in space: CR 102	0.000	0.00	0.032	960.84	0.032	960.84	UNDERGRND
Underground Wall 23 in space: STOR 103	0.000	0.00	0.032	86.28	0.032	86.28	UNDERGRND
Underground Wall 24 in space: OFF 104	0.000	0.00	0.032	341.62	0.032	341.62	UNDERGRND
Underground Wall 25 in space: OFF 106	0.000	0.00	0.032	526.59	0.032	526.59	UNDERGRND
Underground Wall 26 in space: V-1	0.000	0.00	0.032	192.23	0.032	192.23	UNDERGRND
Underground Wall 28 in space: Caf 108	0.000	0.00	0.032	2253.21	0.032	2253.21	UNDERGRND
Underground Wall 31 in space: STRS C-1	0.000	0.00	0.032	171.48	0.032	171.48	UNDERGRND
Underground Wall 19 in space: KITCH 115	0.000	0.00	0.032	1541.37	0.032	1541.37	UNDERGRND
Underground Wall 29 in space: MTNG 109	0.000	0.00	0.032	293.05	0.032	293.05	UNDERGRND
Underground Wall 30 in space: ELEV-1	0.000	0.00	0.032	193.50	0.032	193.50	UNDERGRND
Underground Wall 32 in space: Nurse 107	0.000	0.00	0.032	499.23	0.032	499.23	UNDERGRND
Underground Wall 33 in space: CR 105	0.000	0.00	0.032	894.74	0.032	894.74	UNDERGRND
Underground Wall 34 in space: RRs 101,3,5	0.000	0.00	0.032	230.99	0.032	230.99	UNDERGRND
Underground Wall 35 in space: CR 101	0.000	0.00	0.032	945.18	0.032	945.18	UNDERGRND
Underground Wall 36 in space: CORR-CR	0.000	0.00	0.032	636.65	0.032	636.65	UNDERGRND
Underground Wall 37 in space: RR 102,4	0.000	0.00	0.032	148.75	0.032	148.75	UNDERGRND
Underground Wall 38 in space: JC 113	0.000	0.00	0.032	54.75	0.032	54.75	UNDERGRND
Underground Wall 39 in space: STOR 111	0.000	0.00	0.032	122.40	0.032	122.40	UNDERGRND
Underground Wall 20 in space: LCKR 115	0.000	0.00	0.032	162.22	0.032	162.22	UNDERGRND
Underground Wall 41 in space: LCKR 115	0.000	0.00	0.032	162.22	0.032	162.22	UNDERGRND
Underground Wall 40 in space: LOBBY	0.000	0.00	0.032	620.06	0.032	620.06	UNDERGRND
Underground Wall 42 in space: CORR Elev	0.000	0.00	0.032	678.50	0.032	678.50	UNDERGRND

REPORT- LV-D Details of Exterior Surfaces WEATHER FILE- NEW YORK LAGUARDI NY

(CONTINUED)

	AVERAGE U-VALUE/WINDOWS (BTU/HR-SQFT-F)	AVERAGE U-VALUE/WALLS (BTU/HR-SQFT-F)	AVERAGE U-VALUE WALLS+WINDOWS (BTU/HR-SQFT-F)	WINDOW AREA (SQFT)	WALL AREA (SQFT)	WINDOW+WALL AREA (SQFT)
NORTH	0.000	0.062	0.062	0.00	5682.70	5682.70
EAST	0.544	0.062	0.121	1635.75	11695.30	13331.05
SOUTH	0.544	0.062	0.077	175.00	5507.70	5682.70
WEST	0.550	0.062	0.161	2702.43	10628.63	13331.05
ROOF	0.000	0.047	0.047	0.00	13344.72	13344.72
ALL WALLS	0.548	0.062	0.120	4513.17	33514.32	38027.50
WALLS+ROOFS	0.548	0.058	0.101	4513.17	46859.04	51372.21
UNDERGRND	0.000	0.032	0.032	0.00	18759.51	18759.51
BUILDING	0.548	0.050	0.083	4513.17	65618.55	70131.72

NUMBER OF WINDOWS 106

(Note: u-values include outside air film)

WINDOW NAME	MULTIPLIER	GLASS AREA (SQFT)	GLASS HEIGHT (FT)	GLASS WIDTH (FT)	LOCATION OF ORIGIN IN SURFACE COORDINATES X (FT)	Y (FT)	FRAME AREA (SQFT)	CURB AREA (SQFT)	FRAME U-VALUE (BTU/HR-SQFT-F)	CURB U-VALUE (BTU/HR-SQFT-F)
Window 25	1.0	9.00	3.00	3.00	3.20	9.00	0.00	0.00	0.908	0.000
Window 34	1.0	20.25	6.75	3.00	7.25	3.00	0.00	0.00	0.908	0.000
Window 35	1.0	81.00	6.75	12.00	14.50	3.00	0.00	0.00	0.908	0.000
Window 52	1.0	60.75	6.75	9.00	3.50	3.00	0.00	0.00	0.908	0.000
Window 61	1.0	20.25	6.75	3.00	4.50	3.00	0.00	0.00	0.908	0.000
Window 62	1.0	122.43	8.30	14.75	1.00	0.00	0.00	0.00	0.908	0.000
Window 64	1.0	81.00	6.75	12.00	8.00	3.00	0.00	0.00	0.908	0.000
Window 65	1.0	81.00	6.75	12.00	31.00	3.00	0.00	0.00	0.908	0.000
Window 66	1.0	81.00	6.75	12.00	52.00	3.00	0.00	0.00	0.908	0.000
Window 67	1.0	81.00	6.75	12.00	69.00	3.00	0.00	0.00	0.908	0.000
Window 10	1.0	9.00	3.00	3.00	4.50	3.00	0.00	0.00	0.908	0.000
Window 77	1.0	60.75	6.75	9.00	5.00	3.00	0.00	0.00	0.908	0.000
Window 95	1.0	20.25	6.75	3.00	17.50	3.00	0.00	0.00	0.908	0.000
Window 96	1.0	40.50	6.75	6.00	0.50	3.00	0.00	0.00	0.908	0.000
Window 101	1.0	81.00	6.75	12.00	13.00	3.00	0.00	0.00	0.908	0.000
Window 85	1.0	81.00	6.75	12.00	18.00	3.00	0.00	0.00	0.908	0.000
Window 91	1.0	40.50	6.75	6.00	4.25	3.00	0.00	0.00	0.908	0.000
Window 14	1.0	20.25	6.75	3.00	2.70	2.75	0.00	0.00	0.908	0.000
Window 26	1.0	9.00	3.00	3.00	3.20	9.00	0.00	0.00	0.908	0.000
Window 30	1.0	9.00	3.00	3.00	3.20	2.50	0.00	0.00	0.908	0.000
Window 11	1.0	9.00	3.00	3.00	4.50	3.00	0.00	0.00	0.908	0.000
Window 8	1.0	25.00	5.00	5.00	1.00	10.00	0.00	0.00	0.908	0.000
Window 9	1.0	25.00	5.00	5.00	1.00	16.75	0.00	0.00	0.908	0.000
Window 36	1.0	81.00	6.75	12.00	14.50	3.00	0.00	0.00	0.908	0.000
Window 40	1.0	20.25	6.75	3.00	7.25	3.00	0.00	0.00	0.908	0.000
Window 46	1.0	20.25	6.75	3.00	35.50	3.00	0.00	0.00	0.908	0.000
Window 47	1.0	81.00	6.75	12.00	5.00	3.00	0.00	0.00	0.908	0.000
Window 56	1.0	20.25	6.75	3.00	23.50	3.00	0.00	0.00	0.908	0.000
Window 57	1.0	20.25	6.75	3.00	32.75	3.00	0.00	0.00	0.908	0.000
Window 63	1.0	40.50	6.75	6.00	1.50	3.00	0.00	0.00	0.908	0.000
Window 68	1.0	81.00	6.75	12.00	8.00	3.00	0.00	0.00	0.908	0.000
Window 75	1.0	40.50	6.75	6.00	31.00	3.00	0.00	0.00	0.908	0.000
Window 76	1.0	40.50	6.75	6.00	0.00	3.00	0.00	0.00	0.908	0.000
Window 19	1.0	25.00	5.00	5.00	4.00	16.75	0.00	0.00	0.908	0.000
Window 20	1.0	25.00	5.00	5.00	13.00	16.75	0.00	0.00	0.908	0.000
Window 21	1.0	25.00	5.00	5.00	22.00	16.75	0.00	0.00	0.908	0.000
Window 22	1.0	25.00	5.00	5.00	34.00	16.75	0.00	0.00	0.908	0.000
Window 23	1.0	25.00	5.00	5.00	43.00	16.75	0.00	0.00	0.908	0.000
Window 24	1.0	25.00	5.00	5.00	52.00	16.75	0.00	0.00	0.908	0.000
Window 2	1.0	25.00	5.00	5.00	24.25	10.00	0.00	0.00	0.908	0.000
Window 3	1.0	25.00	5.00	5.00	36.00	10.00	0.00	0.00	0.908	0.000
Window 5	1.0	25.00	5.00	5.00	14.25	16.75	0.00	0.00	0.908	0.000
Window 6	1.0	25.00	5.00	5.00	24.25	16.75	0.00	0.00	0.908	0.000
Window 7	1.0	25.00	5.00	5.00	36.00	16.75	0.00	0.00	0.908	0.000
Window 78	1.0	20.25	6.75	3.00	8.00	3.00	0.00	0.00	0.908	0.000
Window 84	1.0	20.25	6.75	3.00	1.00	3.00	0.00	0.00	0.908	0.000
Window 90	1.0	81.00	6.75	12.00	12.00	3.00	0.00	0.00	0.908	0.000
Window 105	1.0	40.50	6.75	6.00	6.00	3.00	0.00	0.00	0.908	0.000
Window 108	1.0	60.75	6.75	9.00	17.00	3.00	0.00	0.00	0.908	0.000

(Note: u-values include outside air film)

WINDOW NAME	MULTIPLIER	GLASS AREA (SQFT)	GLASS HEIGHT (FT)	GLASS WIDTH (FT)	LOCATION OF ORIGIN IN SURFACE COORDINATES X (FT)	Y (FT)	FRAME AREA (SQFT)	CURB AREA (SQFT)	FRAME U-VALUE (BTU/HR-SQFT-F)	CURB U-VALUE (BTU/HR-SQFT-F)
Window 94	1.0	20.25	6.75	3.00	24.00	3.00	0.00	0.00	0.908	0.000
Window 100	1.0	81.00	6.75	12.00	4.75	3.00	0.00	0.00	0.908	0.000
Window 15	1.0	20.25	6.75	3.00	2.70	2.75	0.00	0.00	0.908	0.000
Window 27	1.0	9.00	3.00	3.00	3.20	9.00	0.00	0.00	0.908	0.000
Window 31	1.0	9.00	3.00	3.00	3.20	2.50	0.00	0.00	0.908	0.000
Window 12	1.0	9.00	3.00	3.00	4.50	3.00	0.00	0.00	0.908	0.000
Window 79	1.0	20.25	6.75	3.00	8.00	3.00	0.00	0.00	0.908	0.000
Window 16	1.0	20.25	6.75	3.00	2.70	2.75	0.00	0.00	0.908	0.000
Window 37	1.0	81.00	6.75	12.00	14.50	3.00	0.00	0.00	0.908	0.000
Window 41	1.0	20.25	6.75	3.00	7.25	3.00	0.00	0.00	0.908	0.000
Window 44	1.0	20.25	6.75	3.00	6.00	3.00	0.00	0.00	0.908	0.000
Window 45	1.0	81.00	6.75	12.00	14.00	3.00	0.00	0.00	0.908	0.000
Window 55	1.0	20.25	6.75	3.00	4.50	3.00	0.00	0.00	0.908	0.000
Window 58	1.0	81.00	6.75	12.00	14.00	3.00	0.00	0.00	0.908	0.000
Window 69	1.0	81.00	6.75	12.00	3.50	3.00	0.00	0.00	0.908	0.000
Window 72	1.0	81.00	6.75	12.00	26.50	3.00	0.00	0.00	0.908	0.000
Window 83	1.0	81.00	6.75	12.00	12.00	3.00	0.00	0.00	0.908	0.000
Window 89	1.0	20.25	6.75	3.00	1.00	3.00	0.00	0.00	0.908	0.000
Window 104	1.0	40.50	6.75	6.00	5.50	3.00	0.00	0.00	0.908	0.000
Window 107	1.0	60.75	6.75	9.00	17.00	3.00	0.00	0.00	0.908	0.000
Window 93	1.0	81.00	6.75	12.00	4.75	3.00	0.00	0.00	0.908	0.000
Window 99	1.0	20.25	6.75	3.00	24.00	3.00	0.00	0.00	0.908	0.000
Window 28	1.0	9.00	3.00	3.00	3.20	9.00	0.00	0.00	0.908	0.000
Window 32	1.0	9.00	3.00	3.00	3.20	2.50	0.00	0.00	0.908	0.000
Window 13	1.0	9.00	3.00	3.00	4.50	3.00	0.00	0.00	0.908	0.000
Window 38	1.0	81.00	6.75	12.00	14.50	3.00	0.00	0.00	0.908	0.000
Window 42	1.0	20.25	6.75	3.00	7.25	3.00	0.00	0.00	0.908	0.000
Window 48	1.0	20.25	6.75	3.00	6.00	3.00	0.00	0.00	0.908	0.000
Window 50	1.0	81.00	6.75	12.00	14.00	3.00	0.00	0.00	0.908	0.000
Window 54	1.0	20.25	6.75	3.00	4.50	3.00	0.00	0.00	0.908	0.000
Window 59	1.0	81.00	6.75	12.00	14.00	3.00	0.00	0.00	0.908	0.000
Window 80	1.0	20.25	6.75	3.00	8.00	3.00	0.00	0.00	0.908	0.000
Window 17	1.0	20.25	6.75	3.00	2.70	2.75	0.00	0.00	0.908	0.000
Window 70	1.0	81.00	6.75	12.00	12.25	3.00	0.00	0.00	0.908	0.000
Window 73	1.0	81.00	6.75	12.00	35.25	3.00	0.00	0.00	0.908	0.000
Window 98	1.0	40.50	6.75	6.00	11.00	3.00	0.00	0.00	0.908	0.000
Window 103	1.0	40.50	6.75	6.00	1.50	3.00	0.00	0.00	0.908	0.000
Window 106	1.0	20.25	6.75	3.00	13.00	3.00	0.00	0.00	0.908	0.000
Window 88	1.0	40.50	6.75	6.00	4.00	3.00	0.00	0.00	0.908	0.000
Window 82	1.0	81.00	6.75	12.00	1.00	3.00	0.00	0.00	0.908	0.000
Window 29	1.0	9.00	3.00	3.00	3.20	9.00	0.00	0.00	0.908	0.000
Window 33	1.0	9.00	3.00	3.00	3.20	2.50	0.00	0.00	0.908	0.000
Window 39	1.0	81.00	6.75	12.00	14.50	3.00	0.00	0.00	0.908	0.000
Window 43	1.0	20.25	6.75	3.00	7.25	3.00	0.00	0.00	0.908	0.000
Window 49	1.0	20.25	6.75	3.00	6.00	3.00	0.00	0.00	0.908	0.000
Window 51	1.0	81.00	6.75	12.00	14.00	3.00	0.00	0.00	0.908	0.000
Window 53	1.0	20.25	6.75	3.00	4.50	3.00	0.00	0.00	0.908	0.000
Window 60	1.0	81.00	6.75	12.00	14.00	3.00	0.00	0.00	0.908	0.000
Window 81	1.0	20.25	6.75	3.00	8.00	3.00	0.00	0.00	0.908	0.000
Window 74	1.0	81.00	6.75	12.00	5.00	3.00	0.00	0.00	0.908	0.000
Window 71	1.0	81.00	6.75	12.00	14.25	3.00	0.00	0.00	0.908	0.000
Window 18	1.0	20.25	6.75	3.00	2.70	2.75	0.00	0.00	0.908	0.000

(Note: u-values include outside air film)

WINDOW NAME	MULTIPLIER	GLASS AREA (SQFT)	GLASS HEIGHT (FT)	GLASS WIDTH (FT)	LOCATION OF ORIGIN IN SURFACE COORDINATES X (FT)	Y (FT)	FRAME AREA (SQFT)	CURB AREA (SQFT)	FRAME U-VALUE (BTU/HR-SQFT-F)	CURB U-VALUE (BTU/HR-SQFT-F)
Window 92	1.0	60.75	6.75	9.00	4.75	3.00	0.00	0.00	0.908	0.000
Window 97	1.0	40.50	6.75	6.00	23.50	3.00	0.00	0.00	0.908	0.000
Window 102	1.0	40.50	6.75	6.00	1.50	3.00	0.00	0.00	0.908	0.000
Window 86	1.0	81.00	6.75	12.00	20.50	3.00	0.00	0.00	0.908	0.000
Window 87	1.0	40.50	6.75	6.00	6.00	3.00	0.00	0.00	0.908	0.000

WINDOW NAME	SETBACK (FT)	GLASS SHADING COEFF	NUMBER OF PANES	CENTER-OF-GLASS U-VALUE (BTU/HR-SQFT-F)	GLASS VISIBLE TRANS	GLASS SOLAR TRANS	SURFACE TO ROUGH OPEN AREA RATIO
Window 25	0.00	0.46	1	0.544	0.440	0.878	1.000
Window 34	0.00	0.46	1	0.544	0.440	0.878	1.000
Window 35	0.00	0.46	1	0.544	0.440	0.878	1.000
Window 52	0.00	0.46	1	0.544	0.440	0.878	1.000
Window 61	0.00	0.46	1	0.544	0.440	0.878	1.000
Window 62	0.00	0.46	1	0.678	0.440	0.878	1.000
Window 64	0.00	0.46	1	0.544	0.440	0.878	1.000
Window 65	0.00	0.46	1	0.544	0.440	0.878	1.000
Window 66	0.00	0.46	1	0.544	0.440	0.878	1.000
Window 67	0.00	0.46	1	0.544	0.440	0.878	1.000
Window 10	0.00	0.46	1	0.544	0.440	0.878	1.000
Window 77	0.00	0.46	1	0.544	0.440	0.878	1.000
Window 95	0.00	0.46	1	0.544	0.440	0.878	1.000
Window 96	0.00	0.46	1	0.544	0.440	0.878	1.000
Window 101	0.00	0.46	1	0.544	0.440	0.878	1.000
Window 85	0.00	0.46	1	0.544	0.440	0.878	1.000
Window 91	0.00	0.46	1	0.544	0.440	0.878	1.000
Window 14	0.00	0.46	1	0.544	0.440	0.878	1.000
Window 26	0.00	0.46	1	0.544	0.440	0.878	1.000
Window 30	0.00	0.46	1	0.544	0.440	0.878	1.000
Window 11	0.00	0.46	1	0.544	0.440	0.878	1.000
Window 8	0.00	0.46	1	0.544	0.440	0.878	1.000
Window 9	0.00	0.46	1	0.544	0.440	0.878	1.000
Window 36	0.00	0.46	1	0.544	0.440	0.878	1.000
Window 40	0.00	0.46	1	0.544	0.440	0.878	1.000
Window 46	0.00	0.46	1	0.544	0.440	0.878	1.000
Window 47	0.00	0.46	1	0.544	0.440	0.878	1.000
Window 56	0.00	0.46	1	0.544	0.440	0.878	1.000
Window 57	0.00	0.46	1	0.544	0.440	0.878	1.000
Window 63	0.00	0.46	1	0.544	0.440	0.878	1.000
Window 68	0.00	0.46	1	0.544	0.440	0.878	1.000
Window 75	0.00	0.46	1	0.544	0.440	0.878	1.000
Window 76	0.00	0.46	1	0.544	0.440	0.878	1.000
Window 19	0.00	0.46	1	0.544	0.440	0.878	1.000
Window 20	0.00	0.46	1	0.544	0.440	0.878	1.000
Window 21	0.00	0.46	1	0.544	0.440	0.878	1.000
Window 22	0.00	0.46	1	0.544	0.440	0.878	1.000
Window 23	0.00	0.46	1	0.544	0.440	0.878	1.000
Window 24	0.00	0.46	1	0.544	0.440	0.878	1.000
Window 2	0.00	0.46	1	0.544	0.440	0.878	1.000
Window 3	0.00	0.46	1	0.544	0.440	0.878	1.000

REPORT- LV-H Details of Windows WEATHER FILE- NEW YORK LAGUARDI NY
(CONTINUED)

WINDOW NAME	SETBACK (FT)	GLASS SHADING COEFF	NUMBER OF PANES	CENTER-OF-GLASS U-VALUE (BTU/HR-SQFT-F)	GLASS VISIBLE TRANS	GLASS SOLAR TRANS	SURFACE TO ROUGH OPEN AREA RATIO
Window 5	0.00	0.46	1	0.544	0.440	0.878	1.000
Window 6	0.00	0.46	1	0.544	0.440	0.878	1.000
Window 7	0.00	0.46	1	0.544	0.440	0.878	1.000
Window 78	0.00	0.46	1	0.544	0.440	0.878	1.000
Window 84	0.00	0.46	1	0.544	0.440	0.878	1.000
Window 90	0.00	0.46	1	0.544	0.440	0.878	1.000
Window 105	0.00	0.46	1	0.544	0.440	0.878	1.000
Window 108	0.00	0.46	1	0.544	0.440	0.878	1.000
Window 94	0.00	0.46	1	0.544	0.440	0.878	1.000
Window 100	0.00	0.46	1	0.544	0.440	0.878	1.000
Window 15	0.00	0.46	1	0.544	0.440	0.878	1.000
Window 27	0.00	0.46	1	0.544	0.440	0.878	1.000
Window 31	0.00	0.46	1	0.544	0.440	0.878	1.000
Window 12	0.00	0.46	1	0.544	0.440	0.878	1.000
Window 79	0.00	0.46	1	0.544	0.440	0.878	1.000
Window 16	0.00	0.46	1	0.544	0.440	0.878	1.000
Window 37	0.00	0.46	1	0.544	0.440	0.878	1.000
Window 41	0.00	0.46	1	0.544	0.440	0.878	1.000
Window 44	0.00	0.46	1	0.544	0.440	0.878	1.000
Window 45	0.00	0.46	1	0.544	0.440	0.878	1.000
Window 55	0.00	0.46	1	0.544	0.440	0.878	1.000
Window 58	0.00	0.46	1	0.544	0.440	0.878	1.000
Window 69	0.00	0.46	1	0.544	0.440	0.878	1.000
Window 72	0.00	0.46	1	0.544	0.440	0.878	1.000
Window 83	0.00	0.46	1	0.544	0.440	0.878	1.000
Window 89	0.00	0.46	1	0.544	0.440	0.878	1.000
Window 104	0.00	0.46	1	0.544	0.440	0.878	1.000
Window 107	0.00	0.46	1	0.544	0.440	0.878	1.000
Window 93	0.00	0.46	1	0.544	0.440	0.878	1.000
Window 99	0.00	0.46	1	0.544	0.440	0.878	1.000
Window 28	0.00	0.46	1	0.544	0.440	0.878	1.000
Window 32	0.00	0.46	1	0.544	0.440	0.878	1.000
Window 13	0.00	0.46	1	0.544	0.440	0.878	1.000
Window 38	0.00	0.46	1	0.544	0.440	0.878	1.000
Window 42	0.00	0.46	1	0.544	0.440	0.878	1.000
Window 48	0.00	0.46	1	0.544	0.440	0.878	1.000
Window 50	0.00	0.46	1	0.544	0.440	0.878	1.000
Window 54	0.00	0.46	1	0.544	0.440	0.878	1.000
Window 59	0.00	0.46	1	0.544	0.440	0.878	1.000
Window 80	0.00	0.46	1	0.544	0.440	0.878	1.000
Window 17	0.00	0.46	1	0.544	0.440	0.878	1.000
Window 70	0.00	0.46	1	0.544	0.440	0.878	1.000
Window 73	0.00	0.46	1	0.544	0.440	0.878	1.000
Window 98	0.00	0.46	1	0.544	0.440	0.878	1.000
Window 103	0.00	0.46	1	0.544	0.440	0.878	1.000
Window 106	0.00	0.46	1	0.544	0.440	0.878	1.000
Window 88	0.00	0.46	1	0.544	0.440	0.878	1.000
Window 82	0.00	0.46	1	0.544	0.440	0.878	1.000
Window 29	0.00	0.46	1	0.544	0.440	0.878	1.000
Window 33	0.00	0.46	1	0.544	0.440	0.878	1.000
Window 39	0.00	0.46	1	0.544	0.440	0.878	1.000
Window 43	0.00	0.46	1	0.544	0.440	0.878	1.000
Window 49	0.00	0.46	1	0.544	0.440	0.878	1.000
Window 51	0.00	0.46	1	0.544	0.440	0.878	1.000

REPORT- LV-H Details of Windows WEATHER FILE- NEW YORK LAGUARDI NY

(CONTINUED)

WINDOW NAME	SETBACK (FT)	GLASS SHADING COEFF	NUMBER OF PANES	CENTER-OF-GLASS U-VALUE (BTU/HR-SQFT-F)	GLASS VISIBLE TRANS	GLASS SOLAR TRANS	SURFACE TO ROUGH OPEN AREA RATIO
Window 53	0.00	0.46	1	0.544	0.440	0.878	1.000
Window 60	0.00	0.46	1	0.544	0.440	0.878	1.000
Window 81	0.00	0.46	1	0.544	0.440	0.878	1.000
Window 74	0.00	0.46	1	0.544	0.440	0.878	1.000
Window 71	0.00	0.46	1	0.544	0.440	0.878	1.000
Window 18	0.00	0.46	1	0.544	0.440	0.878	1.000
Window 92	0.00	0.46	1	0.544	0.440	0.878	1.000
Window 97	0.00	0.46	1	0.544	0.440	0.878	1.000
Window 102	0.00	0.46	1	0.544	0.440	0.878	1.000
Window 86	0.00	0.46	1	0.544	0.440	0.878	1.000
Window 87	0.00	0.46	1	0.544	0.440	0.878	1.000

NUMBER OF CONSTRUCTIONS 12 DELAYED 10 QUICK 2

CONSTRUCTION NAME	U-VALUE (BTU/HR-SQFT-F)	SURFACE ABSORPTANCE	SURFACE ROUGHNESS INDEX	SURFACE TYPE	NUMBER OF RESPONSE FACTORS
EW-TYP-GB-CON	0.064	0.70	3	DELAYED	11
EW-TYP-NOGB-CON	0.059	0.70	3	DELAYED	37
EXP-FL-INT-CON	0.075	0.70	3	DELAYED	13
UW-CON	0.032	0.70	3	DELAYED	15
IW-CON	0.518	0.70	3	DELAYED	6
RF-CON	0.048	0.70	3	DELAYED	4
SLOPED-RF-CON	0.048	0.70	3	DELAYED	4
SLAB-ON-GRADE	0.032	0.70	3	DELAYED	7
FL-INT-CON	1.020	0.70	3	DELAYED	4
CL-INT-CON	0.805	0.70	3	DELAYED	4
DR-CON	0.700	0.70	3	QUICK	0
LD-DR-CON	1.500	0.70	3	QUICK	0

REPORT- SV-A System Design Parameters for Floor 1 CLASS SYS WEATHER FILE- NEW YORK LAGUARDI NY

SYSTEM TYPE	ALTITUDE FACTOR	FLOOR AREA (SQFT)	MAX PEOPLE	OUTSIDE AIR RATIO	COOLING CAPACITY (KBTU/HR)	SENSIBLE (SHR)	HEATING CAPACITY (KBTU/HR)	COOLING EIR (BTU/BTU)	HEATING EIR (BTU/BTU)	HEAT PUMP SUPP-HEAT (KBTU/HR)
PVAVS	1.000	19731.8	147.	0.163	436.451	0.564	-74.509	0.264	0.000	0.000

FAN TYPE	CAPACITY (CFM)	DIVERSITY FACTOR (FRAC)	POWER DEMAND (KW)	FAN DELTA-T (F)	STATIC PRESSURE (IN-WATER)	TOTAL EFF (FRAC)	MECH EFF (FRAC)	FAN PLACEMENT	FAN CONTROL	MAX FAN RATIO (FRAC)	MIN FAN RATIO (FRAC)
SUPPLY	10351.	1.00	10.817	3.23	0.0	0.00	0.00	DRAW-THRU	BY USER	1.10	0.30
RETURN	10351.	1.00	7.360	2.20	0.0	0.00	0.00	RETURN	BY USER	1.10	0.30

ZONE NAME	SUPPLY FLOW (CFM)	EXHAUST FLOW (CFM)	FAN (KW)	MINIMUM FLOW (FRAC)	OUTSIDE AIR FLOW (CFM)	COOLING CAPACITY (KBTU/HR)	SENSIBLE (FRAC)	EXTRACTION RATE (KBTU/HR)	HEATING CAPACITY (KBTU/HR)	ADDITION RATE (KBTU/HR)	ZONE MULT
CR 102-z	1861.	0.	0.000	0.300	474.	0.00	0.00	38.19	-27.14	-12.06	1.
OFF 104-z	877.	0.	0.000	0.300	35.	0.00	0.00	18.00	-12.79	-5.68	1.
OFF 106-z	1089.	0.	0.000	0.300	55.	0.00	0.00	22.34	-15.87	-7.05	1.
V-1-z	518.	0.	0.000	0.300	3.	0.00	0.00	10.63	-7.55	-3.36	1.
MTNG 109-z	784.	0.	0.000	0.300	32.	0.00	0.00	16.09	-11.43	-5.08	1.
Nurse 107-z	1046.	0.	0.000	0.300	41.	0.00	0.00	21.47	-15.25	-6.78	1.
CR 105-z	1785.	0.	0.000	0.300	415.	0.00	0.00	36.62	-26.02	-11.57	1.
RRs 101,3,5-z	51.	0.	0.000	0.300	0.	0.00	0.00	1.60	-0.74	-0.53	1.
CR 101-z	1910.	0.	0.000	0.300	463.	0.00	0.00	39.19	-27.85	-12.38	1.
CORR-CR-z	104.	0.	0.000	0.300	38.	0.00	0.00	2.14	-1.52	-0.67	1.
RR 102,4-z	24.	0.	0.000	0.300	0.	0.00	0.00	0.76	-0.35	-0.25	1.
JC 113-z	10.	0.	0.000	0.300	0.	0.00	0.00	0.21	-0.15	-0.06	1.
STOR 111-z	20.	0.	0.000	0.300	13.	0.00	0.00	0.41	-0.29	-0.13	1.
LOBBY-z	101.	0.	0.000	0.300	73.	0.00	0.00	2.08	-1.48	-0.66	1.
CORR Elev-z	170.	0.	0.000	0.300	41.	0.00	0.00	4.05	-2.48	-1.10	1.
1st Floor Plenum-z	0.	0.	0.000	0.000	0.	0.00	0.00	0.00	0.00	0.00	1.
ELEV-1-z	0.	0.	0.000	0.000	0.	0.00	0.00	0.00	0.00	0.00	1.

REPORT- SV-A System Design Parameters for Floor 2 CLASS-SYS WEATHER FILE- NEW YORK LAGUARDI NY

SYSTEM TYPE	ALTITUDE FACTOR	FLOOR AREA (SQFT)	MAX PEOPLE	OUTSIDE AIR RATIO	COOLING CAPACITY (KBTU/HR)	SENSIBLE (SHR)	HEATING CAPACITY (KBTU/HR)	COOLING EIR (BTU/BTU)	HEATING EIR (BTU/BTU)	HEAT PUMP SUPP-HEAT (KBTU/HR)
PVAVS	1.000	16965.9	249.	0.224	584.884	0.554	-165.019	0.295	0.000	0.000

FAN TYPE	CAPACITY (CFM)	DIVERSITY FACTOR (FRAC)	POWER DEMAND (KW)	FAN DELTA-T (F)	STATIC PRESSURE (IN-WATER)	TOTAL EFF (FRAC)	MECH EFF (FRAC)	FAN PLACEMENT	FAN CONTROL	MAX FAN RATIO (FRAC)	MIN FAN RATIO (FRAC)
SUPPLY	12962.	1.00	13.403	3.20	0.0	0.00	0.00	DRAW-THRU	BY USER	1.10	0.30
RETURN	12962.	1.00	9.112	2.17	0.0	0.00	0.00	RETURN	BY USER	1.10	0.30

ZONE NAME	SUPPLY FLOW (CFM)	EXHAUST FLOW (CFM)	FAN (KW)	MINIMUM FLOW (FRAC)	OUTSIDE AIR FLOW (CFM)	COOLING CAPACITY (KBTU/HR)	SENSIBLE (FRAC)	EXTRACTION RATE (KBTU/HR)	HEATING CAPACITY (KBTU/HR)	ADDITION RATE (KBTU/HR)	ZONE MULT
CR 202-z	2175.	0.	0.000	0.300	423.	0.00	0.00	44.63	-31.71	-14.09	1.
CR 204-z	2156.	0.	0.000	0.300	432.	0.00	0.00	44.24	-31.44	-13.97	1.
CR 201-z	1728.	0.	0.000	0.300	440.	0.00	0.00	35.47	-25.20	-11.20	1.
CR 203-z	1696.	0.	0.000	0.300	428.	0.00	0.00	34.81	-24.73	-10.99	1.
RR 202 204-z	23.	0.	0.000	0.300	0.	0.00	0.00	0.71	-0.33	-0.24	1.
CORR-2-z	356.	0.	0.000	0.300	97.	0.00	0.00	8.45	-5.18	-2.30	1.
CR 206-z	803.	0.	0.000	0.300	222.	0.00	0.00	16.48	-11.71	-5.20	1.
CR 210-z	2084.	0.	0.000	0.300	406.	0.00	0.00	42.76	-30.38	-13.50	1.
RR JC 2-z	170.	0.	0.000	0.300	0.	0.00	0.00	5.32	-2.48	-1.76	1.
CR 205-z	1672.	0.	0.000	0.300	440.	0.00	0.00	34.31	-24.38	-10.84	1.
STOR 207-z	59.	0.	0.000	0.300	19.	0.00	0.00	1.20	-0.85	-0.38	1.
RR 211-z	12.	0.	0.000	0.300	0.	0.00	0.00	0.38	-0.18	-0.13	1.
RR 208-210-z	29.	0.	0.000	0.300	0.	0.00	0.00	0.90	-0.42	-0.30	1.
2nd Floor Plenum-z	0.	0.	0.000	0.000	0.	0.00	0.00	0.00	0.00	0.00	1.
ELEV-2-z	0.	0.	0.000	0.000	0.	0.00	0.00	0.00	0.00	0.00	1.
UC-N 2-z	0.	0.	0.000	0.000	0.	0.00	0.00	0.00	0.00	0.00	1.

REPORT- SV-A System Design Parameters for Floor 3 CLASS-SYS WEATHER FILE- NEW YORK LAGUARDI NY

SYSTEM TYPE	ALTITUDE FACTOR	FLOOR AREA (SQFT)	MAX PEOPLE	OUTSIDE AIR RATIO	COOLING CAPACITY (KBTU/HR)	SENSIBLE (SHR)	HEATING CAPACITY (KBTU/HR)	COOLING EIR (BTU/BTU)	HEATING EIR (BTU/BTU)	HEAT PUMP SUPP-HEAT (KBTU/HR)
PVAVS	1.000	17375.3	237.	0.251	599.877	0.551	-198.956	0.295	0.000	0.000

FAN TYPE	CAPACITY (CFM)	DIVERSITY FACTOR (FRAC)	POWER DEMAND (KW)	FAN DELTA-T (F)	STATIC PRESSURE (IN-WATER)	TOTAL EFF (FRAC)	MECH EFF (FRAC)	FAN PLACEMENT	FAN CONTROL	MAX FAN RATIO (FRAC)	MIN FAN RATIO (FRAC)
SUPPLY	13075.	1.00	13.506	3.19	0.0	0.00	0.00	DRAW-THRU	BY USER	1.10	0.30
RETURN	13075.	1.00	9.179	2.17	0.0	0.00	0.00	RETURN	BY USER	1.10	0.30

ZONE NAME	SUPPLY FLOW (CFM)	EXHAUST FLOW (CFM)	FAN (KW)	MINIMUM FLOW (FRAC)	OUTSIDE AIR FLOW (CFM)	COOLING CAPACITY (KBTU/HR)	SENSIBLE (FRAC)	EXTRACTION RATE (KBTU/HR)	HEATING CAPACITY (KBTU/HR)	ADDITION RATE (KBTU/HR)	ZONE MULT
CR 302-z	1742.	0.	0.000	0.300	440.	0.00	0.00	35.75	-25.40	-11.29	1.
CR 304-z	1751.	0.	0.000	0.300	441.	0.00	0.00	35.94	-25.54	-11.35	1.
CR 301-z	1728.	0.	0.000	0.300	440.	0.00	0.00	35.47	-25.20	-11.20	1.
CR 303-z	1696.	0.	0.000	0.300	438.	0.00	0.00	34.81	-24.73	-10.99	1.
RR JC 3-z	170.	0.	0.000	0.300	0.	0.00	0.00	5.32	-2.48	-1.76	1.
RR 309-z	12.	0.	0.000	0.300	0.	0.00	0.00	0.38	-0.18	-0.13	1.
CORR-3-z	356.	0.	0.000	0.300	85.	0.00	0.00	8.45	-5.18	-2.30	1.
CR 306-z	1761.	0.	0.000	0.300	441.	0.00	0.00	36.13	-25.67	-11.41	1.
EXERCISE 310-z	1795.	0.	0.000	0.300	511.	0.00	0.00	36.83	-26.17	-11.63	1.
OFF 308-z	314.	0.	0.000	0.300	14.	0.00	0.00	6.45	-4.59	-2.04	1.
CR 305-z	1672.	0.	0.000	0.300	441.	0.00	0.00	34.31	-24.38	-10.84	1.
STOR 307-z	77.	0.	0.000	0.300	34.	0.00	0.00	1.57	-1.12	-0.50	1.
3rd Floor Plenum-z	0.	0.	0.000	0.000	0.	0.00	0.00	0.00	0.00	0.00	1.
ELEV-3-z	0.	0.	0.000	0.000	0.	0.00	0.00	0.00	0.00	0.00	1.
UC-N 3-z	0.	0.	0.000	0.000	0.	0.00	0.00	0.00	0.00	0.00	1.
UC-E 3-z	0.	0.	0.000	0.000	0.	0.00	0.00	0.00	0.00	0.00	1.

REPORT- SV-A System Design Parameters for Floor 4 CLASS-SYS WEATHER FILE- NEW YORK LAGUARDI NY

SYSTEM TYPE	ALTITUDE FACTOR	FLOOR AREA (SQFT)	MAX PEOPLE	OUTSIDE AIR RATIO	COOLING CAPACITY (KBTU/HR)	SENSIBLE (SHR)	HEATING CAPACITY (KBTU/HR)	COOLING EIR (BTU/BTU)	HEATING EIR (BTU/BTU)	HEAT PUMP SUPP-HEAT (KBTU/HR)
PVAVS	1.000	17072.0	161.	0.196	602.691	0.560	-141.918	0.295	0.000	0.000

FAN TYPE	CAPACITY (CFM)	DIVERSITY FACTOR (FRAC)	POWER DEMAND (KW)	FAN DELTA-T (F)	STATIC PRESSURE (IN-WATER)	TOTAL EFF (FRAC)	MECH EFF (FRAC)	FAN PLACEMENT	FAN CONTROL	MAX FAN RATIO (FRAC)	MIN FAN RATIO (FRAC)
SUPPLY	13997.	1.00	14.515	3.20	0.0	0.00	0.00	DRAW-THRU	BY USER	1.10	0.30
RETURN	13997.	1.00	9.868	2.18	0.0	0.00	0.00	RETURN	BY USER	1.10	0.30

ZONE NAME	SUPPLY FLOW (CFM)	EXHAUST FLOW (CFM)	FAN (KW)	MINIMUM FLOW (FRAC)	OUTSIDE AIR FLOW (CFM)	COOLING CAPACITY (KBTU/HR)	SENSIBLE (FRAC)	EXTRACTION RATE (KBTU/HR)	HEATING CAPACITY (KBTU/HR)	ADDITION RATE (KBTU/HR)	ZONE MULT
CR 402-z	1742.	0.	0.000	0.300	441.	0.00	0.00	35.75	-25.40	-11.29	1.
CR 404-z	1751.	0.	0.000	0.300	441.	0.00	0.00	35.94	-25.54	-11.35	1.
CR 406-z	1851.	0.	0.000	0.300	444.	0.00	0.00	37.98	-26.99	-12.00	1.
CORR-4-z	427.	0.	0.000	0.300	105.	0.00	0.00	10.14	-6.22	-2.76	1.
WORKRM 403-z	1093.	0.	0.000	0.300	52.	0.00	0.00	22.43	-15.94	-7.08	1.
BREAK 401-z	1264.	0.	0.000	0.300	142.	0.00	0.00	25.94	-18.43	-8.19	1.
RR JC 4-z	170.	0.	0.000	0.300	0.	0.00	0.00	5.32	-2.48	-1.76	1.
RR 413-z	12.	0.	0.000	0.300	0.	0.00	0.00	0.38	-0.18	-0.13	1.
PROJECT 408-z	3214.	0.	0.000	0.300	724.	0.00	0.00	65.96	-46.86	-20.83	1.
STOR 410-z	39.	0.	0.000	0.300	16.	0.00	0.00	0.79	-0.56	-0.25	1.
STOR 409-z	91.	0.	0.000	0.300	35.	0.00	0.00	1.88	-1.33	-0.59	1.
OFF 407-z	1271.	0.	0.000	0.300	75.	0.00	0.00	26.09	-18.54	-8.24	1.
CR 405-z	1070.	0.	0.000	0.300	264.	0.00	0.00	21.96	-15.60	-6.93	1.
4th Floor Plenum-z	0.	0.	0.000	0.000	0.	0.00	0.00	0.00	0.00	0.00	1.
ELEV-4-z	0.	0.	0.000	0.000	0.	0.00	0.00	0.00	0.00	0.00	1.
UC-N 4-z	0.	0.	0.000	0.000	0.	0.00	0.00	0.00	0.00	0.00	1.
UC-E 4-z	0.	0.	0.000	0.000	0.	0.00	0.00	0.00	0.00	0.00	1.

REPORT- SV-A System Design Parameters for Floor 5 CLASS SYS WEATHER FILE- NEW YORK LAGUARDI NY

SYSTEM TYPE	ALTITUDE FACTOR	FLOOR AREA (SQFT)	MAX PEOPLE	OUTSIDE AIR RATIO	COOLING CAPACITY (KBTU/HR)	SENSIBLE (SHR)	HEATING CAPACITY (KBTU/HR)	COOLING EIR (BTU/BTU)	HEATING EIR (BTU/BTU)	HEAT PUMP SUPP-HEAT (KBTU/HR)
PVAVS	1.000	17375.3	201.	0.197	595.711	0.559	-140.490	0.295	0.000	0.000

FAN TYPE	CAPACITY (CFM)	DIVERSITY FACTOR (FRAC)	POWER DEMAND (KW)	FAN DELTA-T (F)	STATIC PRESSURE (IN-WATER)	TOTAL EFF (FRAC)	MECH EFF (FRAC)	FAN PLACEMENT	FAN CONTROL	MAX FAN RATIO (FRAC)	MIN FAN RATIO (FRAC)
SUPPLY	13689.	1.00	14.154	3.20	0.0	0.00	0.00	DRAW-THRU	BY USER	1.10	0.30
RETURN	13689.	1.00	9.623	2.17	0.0	0.00	0.00	RETURN	BY USER	1.10	0.30

ZONE NAME	SUPPLY FLOW (CFM)	EXHAUST FLOW (CFM)	FAN (KW)	MINIMUM FLOW (FRAC)	OUTSIDE AIR FLOW (CFM)	COOLING CAPACITY (KBTU/HR)	SENSIBLE (FRAC)	EXTRACTION RATE (KBTU/HR)	HEATING CAPACITY (KBTU/HR)	ADDITION RATE (KBTU/HR)	ZONE MULT
CR 502-z	1742.	0.	0.000	0.300	441.	0.00	0.00	35.75	-25.40	-11.29	1.
CR 504-z	1751.	0.	0.000	0.300	441.	0.00	0.00	35.94	-25.54	-11.35	1.
CUSTODIAL 505-z	1871.	0.	0.000	0.300	178.	0.00	0.00	38.40	-27.29	-12.13	1.
RESOURCE 503-z	1054.	0.	0.000	0.300	49.	0.00	0.00	21.62	-15.36	-6.83	1.
LIB 501-z	1704.	0.	0.000	0.300	211.	0.00	0.00	34.97	-24.85	-11.04	1.
CR 506-z	1761.	0.	0.000	0.300	441.	0.00	0.00	36.13	-25.67	-11.41	1.
RR JC 5-z	170.	0.	0.000	0.300	0.	0.00	0.00	5.32	-2.48	-1.76	1.
RR 511-z	12.	0.	0.000	0.300	0.	0.00	0.00	0.38	-0.18	-0.13	1.
STOR 509-z	77.	0.	0.000	0.300	34.	0.00	0.00	1.57	-1.12	-0.50	1.
CR 510-z	1306.	0.	0.000	0.300	294.	0.00	0.00	26.79	-19.04	-8.46	1.
CR 508-z	1838.	0.	0.000	0.300	507.	0.00	0.00	37.71	-26.80	-11.91	1.
CORR-5-z	363.	0.	0.000	0.300	101.	0.00	0.00	8.64	-5.30	-2.36	1.
LOCKR 507-z	39.	0.	0.000	0.300	0.	0.00	0.00	0.80	-0.57	-0.25	1.
5th Floor Plenum-z	0.	0.	0.000	0.000	0.	0.00	0.00	0.00	0.00	0.00	1.
ELEV-5-z	0.	0.	0.000	0.000	0.	0.00	0.00	0.00	0.00	0.00	1.
UC-N 5-z	0.	0.	0.000	0.000	0.	0.00	0.00	0.00	0.00	0.00	1.
UC-E 5-z	0.	0.	0.000	0.000	0.	0.00	0.00	0.00	0.00	0.00	1.

REPORT- SV-A System Design Parameters for AHU-4 GYM-SYS WEATHER FILE- NEW YORK LAGUARDI NY

SYSTEM TYPE	ALTITUDE FACTOR	FLOOR AREA (SQFT)	MAX PEOPLE	OUTSIDE AIR RATIO	COOLING CAPACITY (KBTU/HR)	SENSIBLE (SHR)	HEATING CAPACITY (KBTU/HR)	COOLING EIR (BTU/BTU)	HEATING EIR (BTU/BTU)	HEAT PUMP SUPP-HEAT (KBTU/HR)
PSZ	1.000	4107.9	222.	0.206	507.150	0.573	-377.453	0.295	0.000	0.000

FAN TYPE	CAPACITY (CFM)	DIVERSITY FACTOR (FRAC)	POWER DEMAND (KW)	FAN DELTA-T (F)	STATIC PRESSURE (IN-WATER)	TOTAL EFF (FRAC)	MECH EFF (FRAC)	FAN PLACEMENT	FAN CONTROL	MAX FAN RATIO (FRAC)	MIN FAN RATIO (FRAC)
SUPPLY	9586.	1.00	10.986	3.54	0.0	0.00	0.00	BLOW-THRU	BY USER	1.10	0.30
RETURN	9586.	1.00	5.665	1.83	0.0	0.00	0.00	RETURN	BY USER	1.10	0.30

ZONE NAME	SUPPLY FLOW (CFM)	EXHAUST FLOW (CFM)	FAN (KW)	MINIMUM FLOW (FRAC)	OUTSIDE AIR FLOW (CFM)	COOLING CAPACITY (KBTU/HR)	SENSIBLE (FRAC)	EXTRACTION RATE (KBTU/HR)	HEATING CAPACITY (KBTU/HR)	ADDITION RATE (KBTU/HR)	ZONE MULT
GYM 216-z	7980.	0.	0.000	1.000	1582.	0.00	0.00	163.76	0.00	-172.38	1.
OFF 216-z	212.	0.	0.000	1.000	14.	0.00	0.00	4.35	0.00	3.66	1.
STAGE 216-z	1374.	0.	0.000	1.000	367.	0.00	0.00	28.20	0.00	23.75	1.
STOR 212-z	20.	0.	0.000	1.000	16.	0.00	0.00	0.40	0.00	0.34	1.
UC-E 2-z	0.	0.	0.000	0.000	0.	0.00	0.00	0.00	0.00	0.00	1.

REPORT- SV-A System Design Parameters for AHU-3 Caf-SYS WEATHER FILE- NEW YORK LAGUARDI NY

SYSTEM TYPE	ALTITUDE FACTOR	FLOOR AREA (SQFT)	MAX PEOPLE	OUTSIDE AIR RATIO	COOLING CAPACITY (KBTU/HR)	SENSIBLE (SHR)	HEATING CAPACITY (KBTU/HR)	COOLING EIR (BTU/BTU)	HEATING EIR (BTU/BTU)	HEAT PUMP SUPP-HEAT (KBTU/HR)
PSZ	1.000	2668.1	132.	0.549	145.582	0.567	-190.512	0.264	0.000	0.000

FAN TYPE	CAPACITY (CFM)	DIVERSITY FACTOR (FRAC)	POWER DEMAND (KW)	FAN DELTA-T (F)	STATIC PRESSURE (IN-WATER)	TOTAL EFF (FRAC)	MECH EFF (FRAC)	FAN PLACEMENT	FAN CONTROL	MAX FAN RATIO (FRAC)	MIN FAN RATIO (FRAC)
SUPPLY	2717.	1.00	3.094	3.52	0.0	0.00	0.00	BLOW-THRU	BY USER	1.10	0.30
RETURN	2717.	1.00	1.573	1.79	0.0	0.00	0.00	RETURN	BY USER	1.10	0.30

ZONE NAME	SUPPLY FLOW (CFM)	EXHAUST FLOW (CFM)	FAN (KW)	MINIMUM FLOW (FRAC)	OUTSIDE AIR FLOW (CFM)	COOLING CAPACITY (KBTU/HR)	SENSIBLE (FRAC)	EXTRACTION RATE (KBTU/HR)	HEATING CAPACITY (KBTU/HR)	ADDITION RATE (KBTU/HR)	ZONE MULT
Caf 108-z	2654.	0.	0.000	1.000	1485.	0.00	0.00	54.47	0.00	-57.33	1.
RR 108-z	47.	0.	0.000	1.000	0.	0.00	0.00	1.47	0.00	0.20	1.
STOR 112-z	16.	0.	0.000	1.000	7.	0.00	0.00	0.32	0.00	0.07	1.

REPORT- SV-A System Design Parameters for DATA-SYS WEATHER FILE- NEW YORK LAGUARDI NY

SYSTEM TYPE	ALTITUDE FACTOR	FLOOR AREA (SQFT)	MAX PEOPLE	OUTSIDE AIR RATIO	COOLING CAPACITY (KBTU/HR)	SENSIBLE (SHR)	HEATING CAPACITY (KBTU/HR)	COOLING EIR (BTU/BTU)	HEATING EIR (BTU/BTU)	HEAT PUMP SUPP-HEAT (KBTU/HR)
PSZ	1.000	303.3	1.	0.064	12.609	0.545	0.000	0.251	0.000	0.000

FAN TYPE	CAPACITY (CFM)	DIVERSITY FACTOR (FRAC)	POWER DEMAND (KW)	FAN DELTA-T (F)	STATIC PRESSURE (IN-WATER)	TOTAL EFF (FRAC)	MECH EFF (FRAC)	FAN PLACEMENT	FAN CONTROL	MAX FAN RATIO (FRAC)	MIN FAN RATIO (FRAC)
SUPPLY	282.	1.00	0.253	2.77	0.0	0.00	0.00	DRAW-THRU	CONSTANT	1.10	0.30

ZONE NAME	SUPPLY FLOW (CFM)	EXHAUST FLOW (CFM)	FAN (KW)	MINIMUM FLOW (FRAC)	OUTSIDE AIR FLOW (CFM)	COOLING CAPACITY (KBTU/HR)	SENSIBLE (FRAC)	EXTRACTION RATE (KBTU/HR)	HEATING CAPACITY (KBTU/HR)	ADDITION RATE (KBTU/HR)	ZONE MULT
MDF 411-z	282.	0.	0.000	1.000	18.	0.00	0.00	9.14	0.00	-0.83	1.

REPORT- SV-A System Design Parameters for HEAT-ONLY-SYS WEATHER FILE- NEW YORK LAGUARDI NY

SYSTEM TYPE	ALTITUDE FACTOR	FLOOR AREA (SQFT)	MAX PEOPLE	OUTSIDE AIR RATIO	COOLING CAPACITY (KBTU/HR)	SENSIBLE (SHR)	HEATING CAPACITY (KBTU/HR)	COOLING EIR (BTU/BTU)	HEATING EIR (BTU/BTU)	HEAT PUMP SUPP-HEAT (KBTU/HR)
UHT	1.000	8621.9	39.	0.000	0.000	0.000	0.000	0.000	0.000	0.000

FAN TYPE	CAPACITY (CFM)	DIVERSITY FACTOR (FRAC)	POWER DEMAND (KW)	FAN DELTA-T (F)	STATIC PRESSURE (IN-WATER)	TOTAL EFF (FRAC)	MECH EFF (FRAC)	FAN PLACEMENT	FAN CONTROL	MAX FAN RATIO (FRAC)	MIN FAN RATIO (FRAC)
SUPPLY	1151.	0.00	0.001	2.62	0.0	0.00	0.00	BLOW-THRU	CONSTANT	0.00	0.00

ZONE NAME	SUPPLY FLOW (CFM)	EXHAUST FLOW (CFM)	FAN (KW)	MINIMUM FLOW (FRAC)	OUTSIDE AIR FLOW (CFM)	COOLING CAPACITY (KBTU/HR)	EXTRACTION SENSIBLE (FRAC)	EXTRACTION RATE (KBTU/HR)	HEATING CAPACITY (KBTU/HR)	ADDITION RATE (KBTU/HR)	ZONE MULT
CORR Cellar-z	76.	0.	0.065	1.000	0.	0.00	0.00	0.00	-6.00	-5.02	1.
STRS C-C-z	16.	0.	0.013	1.000	0.	0.00	0.00	0.00	-1.23	-1.03	1.
STRS B-C-z	20.	0.	0.017	1.000	0.	0.00	0.00	0.00	-1.57	-1.31	1.
WATER C01-z	51.	0.	0.043	1.000	0.	0.00	0.00	0.00	-4.01	-3.36	1.
ELEC C02-z	42.	0.	0.036	1.000	0.	0.00	0.00	0.00	-3.33	-2.79	1.
STRS A-1-z	71.	0.	0.061	1.000	0.	0.00	0.00	0.00	-5.60	-4.62	1.
STOR 103-z	16.	0.	0.013	1.000	0.	0.00	0.00	0.00	-1.24	-1.02	1.
STRS C-1-z	29.	0.	0.024	1.000	0.	0.00	0.00	0.00	-2.24	-1.85	1.
STRS B-1-z	23.	0.	0.019	1.000	0.	0.00	0.00	0.00	-1.79	-1.48	1.
STRS A-2-z	43.	0.	0.036	1.000	0.	0.00	0.00	0.00	-3.36	-2.78	1.
STRS B-2-z	23.	0.	0.019	1.000	0.	0.00	0.00	0.00	-1.78	-1.47	1.
STRS C-2-z	74.	0.	0.063	1.000	0.	0.00	0.00	0.00	-5.82	-4.81	1.
STRS A-3-z	43.	0.	0.036	1.000	0.	0.00	0.00	0.00	-3.36	-2.78	1.
STRS B-3-z	23.	0.	0.019	1.000	0.	0.00	0.00	0.00	-1.78	-1.47	1.
STRS A-4-z	43.	0.	0.036	1.000	0.	0.00	0.00	0.00	-3.36	-2.78	1.
STRS B-4-z	40.	0.	0.034	1.000	0.	0.00	0.00	0.00	-3.16	-2.61	1.
STRS C-4-z	75.	0.	0.063	1.000	0.	0.00	0.00	0.00	-5.86	-4.84	1.
STRS A-5-z	52.	0.	0.044	1.000	0.	0.00	0.00	0.00	-4.06	-3.35	1.
STRS B-5-z	59.	0.	0.050	1.000	0.	0.00	0.00	0.00	-4.62	-3.81	1.
MECH-z	194.	0.	0.165	1.000	0.	0.00	0.00	0.00	-11.76	-10.05	1.
STOR-PH-z	45.	0.	0.038	1.000	0.	0.00	0.00	0.00	-3.49	-2.88	1.
STRS A-PH-z	53.	0.	0.045	1.000	0.	0.00	0.00	0.00	-4.15	-3.43	1.
CORR-BOH-z	42.	0.	0.036	1.000	0.	0.00	0.00	0.00	-3.32	-2.74	1.

REPORT- SV-A System Design Parameters for DATA-sys2 WEATHER FILE- NEW YORK LAGUARDI NY

SYSTEM TYPE	ALTITUDE FACTOR	FLOOR AREA (SQFT)	MAX PEOPLE	OUTSIDE AIR RATIO	COOLING CAPACITY (KBTU/HR)	SENSIBLE (SHR)	HEATING CAPACITY (KBTU/HR)	COOLING EIR (BTU/BTU)	HEATING EIR (BTU/BTU)	HEAT PUMP SUPP-HEAT (KBTU/HR)
PSZ	1.000	101.4	0.	0.067	4.093	0.543	0.000	0.251	0.000	0.000

FAN TYPE	CAPACITY (CFM)	DIVERSITY FACTOR (FRAC)	POWER DEMAND (KW)	FAN DELTA-T (F)	STATIC PRESSURE (IN-WATER)	TOTAL EFF (FRAC)	MECH EFF (FRAC)	FAN PLACEMENT	FAN CONTROL	MAX FAN RATIO (FRAC)	MIN FAN RATIO (FRAC)
SUPPLY	91.	1.00	0.087	2.94	0.0	0.00	0.00	DRAW-THRU	CONSTANT	1.10	0.30

ZONE NAME	SUPPLY FLOW (CFM)	EXHAUST FLOW (CFM)	FAN (KW)	MINIMUM FLOW (FRAC)	OUTSIDE AIR FLOW (CFM)	COOLING CAPACITY (KBTU/HR)	SENSIBLE (FRAC)	EXTRACTION RATE (KBTU/HR)	HEATING CAPACITY (KBTU/HR)	ADDITION RATE (KBTU/HR)	ZONE MULT
IDF 209-z	91.	0.	0.000	1.000	6.	0.00	0.00	2.94	0.00	-0.17	1.

REPORT- SV-A System Design Parameters for EMR-sys WEATHER FILE- NEW YORK LAGUARDI NY

SYSTEM TYPE	ALTITUDE FACTOR	FLOOR AREA (SQFT)	MAX PEOPLE	OUTSIDE AIR RATIO	COOLING CAPACITY (KBTU/HR)	SENSIBLE (SHR)	HEATING CAPACITY (KBTU/HR)	COOLING EIR (BTU/BTU)	HEATING EIR (BTU/BTU)	HEAT PUMP SUPP-HEAT (KBTU/HR)
PSZ	1.000	324.0	0.	0.121	7.537	0.539	0.000	0.251	0.000	0.000

FAN TYPE	CAPACITY (CFM)	DIVERSITY FACTOR (FRAC)	POWER DEMAND (KW)	FAN DELTA-T (F)	STATIC PRESSURE (IN-WATER)	TOTAL EFF (FRAC)	MECH EFF (FRAC)	FAN PLACEMENT	FAN CONTROL	MAX FAN RATIO (FRAC)	MIN FAN RATIO (FRAC)
SUPPLY	160.	1.00	0.145	2.80	0.0	0.00	0.00	DRAW-THRU	CONSTANT	1.10	0.30

ZONE NAME	SUPPLY FLOW (CFM)	EXHAUST FLOW (CFM)	FAN (KW)	MINIMUM FLOW (FRAC)	OUTSIDE AIR FLOW (CFM)	COOLING CAPACITY (KBTU/HR)	SENSIBLE (FRAC)	EXTRACTION RATE (KBTU/HR)	HEATING CAPACITY (KBTU/HR)	ADDITION RATE (KBTU/HR)	ZONE MULT
ELEV-PH-z	160.	0.	0.000	1.000	19.	0.00	0.00	5.19	0.00	-5.71	1.

REPORT- SV-A System Design Parameters for AHU-3 Kitchen WEATHER FILE- NEW YORK LAGUARDI NY

SYSTEM TYPE	ALTITUDE FACTOR	FLOOR AREA (SQFT)	MAX PEOPLE	OUTSIDE AIR RATIO	COOLING CAPACITY (KBTU/HR)	SENSIBLE (SHR)	HEATING CAPACITY (KBTU/HR)	COOLING EIR (BTU/BTU)	HEATING EIR (BTU/BTU)	HEAT PUMP SUPP-HEAT (KBTU/HR)
PSZ	1.000	2168.1	10.	0.085	91.766	0.593	-97.771	0.264	0.000	0.000

FAN TYPE	CAPACITY (CFM)	DIVERSITY FACTOR (FRAC)	POWER DEMAND (KW)	FAN DELTA-T (F)	STATIC PRESSURE (IN-WATER)	TOTAL EFF (FRAC)	MECH EFF (FRAC)	FAN PLACEMENT	FAN CONTROL	MAX FAN RATIO (FRAC)	MIN FAN RATIO (FRAC)
SUPPLY	2400.	1.00	1.459	1.88	0.0	0.00	0.00	BLOW-THRU	BY USER	1.10	0.30
RETURN	2400.	1.00	0.747	0.96	0.0	0.00	0.00	RETURN	BY USER	1.10	0.30

ZONE NAME	SUPPLY FLOW (CFM)	EXHAUST FLOW (CFM)	FAN (KW)	MINIMUM FLOW (FRAC)	OUTSIDE AIR FLOW (CFM)	COOLING CAPACITY (KBTU/HR)	SENSIBLE (FRAC)	EXTRACTION RATE (KBTU/HR)	HEATING CAPACITY (KBTU/HR)	ADDITION RATE (KBTU/HR)	ZONE MULT
KITCH 115-z	2302.	0.	0.000	1.000	188.	0.00	0.00	54.70	0.00	-67.14	1.
RR 115-z	18.	0.	0.000	1.000	0.	0.00	0.00	0.57	0.00	0.08	1.
STOR 115-z	66.	0.	0.000	1.000	16.	0.00	0.00	1.35	0.00	0.28	1.
LCKR 115-z	14.	0.	0.000	1.000	0.	0.00	0.00	0.29	0.00	0.25	1.

REPORT- PV-A Plant Design Parameters WEATHER FILE- NEW YORK LAGUARDI NY

*** CIRCULATION LOOPS ***

	HEATING CAPACITY (MBTU/HR)	COOLING CAPACITY (MBTU/HR)	LOOP FLOW (GAL/MIN)	TOTAL HEAD (FT)	SUPPLY UA PRODUCT (BTU/HR-F)	SUPPLY LOSS DT (F)	RETURN UA PRODUCT (BTU/HR-F)	RETURN LOSS DT (F)	LOOP VOLUME (GAL)	FLUID HEAT CAPACITY (BTU/LB-F)
PLANT-HW-LOOP-PRIM	-1.740	0.000	69.6	36.6	0.0	0.00	0.0	0.00	104.4	1.00
DW-LOOP	-0.073	0.000	1.9	6.4	0.0	0.00	0.0	0.00	2.9	1.00

*** PUMPS ***

	ATTACHED TO	FLOW (GAL/MIN)	HEAD (FT)	HEAD SETPOINT (FT)	CAPACITY CONTROL	POWER (KW)	MECHANICAL EFFICIENCY (FRAC)	MOTOR EFFICIENCY (FRAC)
HW-PUMP-PRIM	2 PUMP(s)							
PLANT-HW-LOOP-PRIM	PRIMARY LOOP	69.6	50.0	32.6	VFD&STAGED	1.338	0.700	0.700
DHW-REPUMPS	1 PUMP(s)							
DW-LOOP	PRIMARY LOOP	25.0	28.0	0.0	VAR-SPEED	0.278	0.625	0.760

*** PRIMARY EQUIPMENT ***

EQUIPMENT TYPE	ATTACHED TO	RATED CAPACITY (MBTU/HR)	FLOW (GAL/MIN)	RATED EIR (FRAC)	RATED HIR (FRAC)	AUXILIARY (KW)
BLR-1						
HW-BOILER	PLANT-HW-LOOP-PRIM	-0.870	34.8	0.000	1.250	0.500
BLR-2						
HW-BOILER	PLANT-HW-LOOP-PRIM	-0.870	34.8	0.000	1.250	0.500

*** DW-HEATERS ***

EQUIPMENT TYPE	ATTACHED TO	CAPACITY (MBTU/HR)	FLOW (GAL/MIN)	EIR (FRAC)	HIR (FRAC)	AUXILIARY (KW)	TANK (GAL)	TANK UA (BTU/HR-F)
DHW-1								
GAS DW-HEATER	DW-LOOP	-0.102	2.7	0.000	1.220	0.000	120.0	6.18

This page intentionally left blank.

LL86 Baseline Case eQuest Summary Reports:

BEPS

BEPU

ES-D

PS-E

LV-B

LV-D

LV-H

LV-I

SV-A

PV-A

REPORT- BEPS Building Energy Performance WEATHER FILE- NEW YORK LAGUARDI NY

	LIGHTS	TASK LIGHTS	MISC EQUIP	SPACE HEATING	SPACE COOLING	HEAT REJECT	PUMPS & AUX	VENT FANS	REFRIG DISPLAY	HT PUMP SUPPLEM	DOMEST HOT WTR	EXT USAGE	TOTAL
NONR ELECTRICITY													
MBTU	0.0	0.0	427.4	0.0	0.0	0.0	0.0	0.0	0.0	0.0	0.0	0.0	427.4
EM1 ELECTRICITY													
MBTU	388.9	0.0	0.0	0.0	194.8	0.0	44.2	176.1	0.0	0.0	0.0	21.8	825.7
ELEV ELECTRICITY													
MBTU	0.0	0.0	21.3	0.0	0.0	0.0	0.0	0.0	0.0	0.0	0.0	0.0	21.3
FUEL NATURAL-GAS													
MBTU	0.0	0.0	0.0	0.0	0.0	0.0	0.0	0.0	0.0	0.0	0.0	0.0	0.0
NONR NATURAL-GAS													
MBTU	0.0	0.0	38.5	0.0	0.0	0.0	0.0	0.0	0.0	0.0	0.0	0.0	38.5
DHW- NATURAL-GAS													
MBTU	0.0	0.0	0.0	0.0	0.0	0.0	0.0	0.0	0.0	0.0	235.5	0.0	235.5
FM1 NATURAL-GAS													
MBTU	0.0	0.0	0.0	348.6	0.0	0.0	0.0	0.0	0.0	0.0	0.0	0.0	348.6
MBTU	388.9	0.0	487.1	348.6	194.8	0.0	44.2	176.1	0.0	0.0	235.5	21.8	1897.0

TOTAL SITE ENERGY 1897.02 MBTU 31.7 KBTU/SQFT-YR GROSS-AREA 31.7 KBTU/SQFT-YR NET-AREA
TOTAL SOURCE ENERGY 4514.62 MBTU 75.4 KBTU/SQFT-YR GROSS-AREA 75.4 KBTU/SQFT-YR NET-AREA

PERCENT OF HOURS ANY SYSTEM ZONE OUTSIDE OF THROTTLING RANGE = 2.51
PERCENT OF HOURS ANY PLANT LOAD NOT SATISFIED = 0.00
HOURS ANY ZONE ABOVE COOLING THROTTLING RANGE = 104
HOURS ANY ZONE BELOW HEATING THROTTLING RANGE = 116

NOTE: ENERGY IS APPORTIONED HOURLY TO ALL END-USE CATEGORIES.

REPORT- BEPU Building Utility Performance WEATHER FILE- NEW YORK LAGUARDI NY

	LIGHTS	TASK LIGHTS	MISC EQUIP	SPACE HEATING	SPACE COOLING	HEAT REJECT	PUMPS & AUX	VENT FANS	REFRIG DISPLAY	HT PUMP SUPPLEM	DOMEST HOT WTR	EXT USAGE	TOTAL
NONR ELECTRICITY													
KWH	0.	0.	125227.	0.	0.	0.	0.	0.	0.	0.	0.	0.	125227.
EM1 ELECTRICITY													
KWH	113940.	0.	0.	0.	57076.	0.	12941.	51590.	0.	0.	0.	6396.	241942.
ELEV ELECTRICITY													
KWH	0.	0.	6234.	0.	0.	0.	0.	0.	0.	0.	0.	0.	6234.
FUEL NATURAL-GAS													
THERM	0.	0.	0.	0.	0.	0.	0.	0.	0.	0.	0.	0.	0.
NONR NATURAL-GAS													
THERM	0.	0.	385.	0.	0.	0.	0.	0.	0.	0.	0.	0.	385.
DHW- NATURAL-GAS													
THERM	0.	0.	0.	0.	0.	0.	0.	0.	0.	0.	2355.	0.	2355.
FM1 NATURAL-GAS													
THERM	0.	0.	0.	3486.	0.	0.	0.	0.	0.	0.	0.	0.	3486.

TOTAL ELECTRICITY 373402. KWH 6.237 KWH /SQFT-YR GROSS-AREA 6.237 KWH /SQFT-YR NET-AREA
TOTAL NATURAL-GAS 6226. THERM 0.104 THERM /SQFT-YR GROSS-AREA 0.104 THERM /SQFT-YR NET-AREA

PERCENT OF HOURS ANY SYSTEM ZONE OUTSIDE OF THROTTLING RANGE = 2.51
PERCENT OF HOURS ANY PLANT LOAD NOT SATISFIED = 0.00
HOURS ANY ZONE ABOVE COOLING THROTTLING RANGE = 104
HOURS ANY ZONE BELOW HEATING THROTTLING RANGE = 116

NOTE: ENERGY IS APPORTIONED HOURLY TO ALL END-USE CATEGORIES.

REPORT- ES-D Energy Cost Summary WEATHER FILE- NEW YORK LAGUARDI NY

UTILITY-RATE	RESOURCE	METERS	METERED ENERGY UNITS/YR	TOTAL CHARGE ($)	VIRTUAL RATE ($/UNIT)	RATE USED ALL YEAR?
REG-ELEC-TARIFF	ELECTRICITY	EM1 ELEV	248175. KWH	74186.	0.2989	YES
UNREG-ELEC-TARIFF	ELECTRICITY	NONR	125227. KWH	26101.	0.2084	YES
REG-GAS-TARIFF	NATURAL-GAS	FM1 FUEL DHW-	5841. THERM	6494.	1.1117	YES
UNREG-GAS-TARIFF	NATURAL-GAS	NONR	385. THERM	428.	1.1117	YES
				========== 107209.		

ENERGY COST/GROSS BLDG AREA: 1.79
ENERGY COST/NET BLDG AREA: 1.79

REPORT- PS-E Energy End-Use Summary for all Electric Meters WEATHER FILE- NEW YORK LAGUARDI NY

	LIGHTS	TASK LIGHTS	MISC EQUIP	SPACE HEATING	SPACE COOLING	HEAT REJECT	PUMPS & AUX	VENT FANS	REFRIG DISPLAY	HT PUMP SUPPLEM	DOMEST HOT WTR	EXT USAGE	TOTAL
JAN													
KWH	10171.	0.	12490.	0.	243.	0.	520.	6390.	0.	0.	0.	599.	30413.
MAX KW	49.907	0.000	47.706	0.000	10.488	0.000	6.308	44.294	0.000	0.000	0.000	1.460	134.400
DAY/HR	2/10	0/ 0	3/13	0/ 0	30/18	0/ 0	30/18	2/ 8	0/ 0	0/ 0	0/ 0	1/ 1	22/13
PEAK ENDUSE	49.435	0.000	47.706	0.000	0.541	0.000	1.111	35.606	0.000	0.000	0.000	0.000	
PEAK PCT	36.8	0.0	35.5	0.0	0.4	0.0	0.8	26.5	0.0	0.0	0.0	0.0	
FEB													
KWH	9201.	0.	11320.	0.	218.	0.	470.	5931.	0.	0.	0.	501.	27640.
MAX KW	49.907	0.000	47.706	0.000	11.376	0.000	6.308	39.835	0.000	0.000	0.000	1.460	134.448
DAY/HR	1/10	0/ 0	1/13	0/ 0	23/18	0/ 0	1/18	5/ 8	0/ 0	0/ 0	0/ 0	1/ 1	6/13
PEAK ENDUSE	49.435	0.000	47.706	0.000	0.526	0.000	1.114	35.666	0.000	0.000	0.000	0.000	
PEAK PCT	36.8	0.0	35.5	0.0	0.4	0.0	0.8	26.5	0.0	0.0	0.0	0.0	
MAR													
KWH	10615.	0.	12873.	0.	643.	0.	737.	4175.	0.	0.	0.	543.	29585.
MAX KW	49.907	0.000	47.706	0.000	12.177	0.000	6.557	35.583	0.000	0.000	0.000	1.460	131.522
DAY/HR	1/10	0/ 0	1/13	0/ 0	8/11	0/ 0	13/17	5/ 9	0/ 0	0/ 0	0/ 0	1/ 1	5/ 9
PEAK ENDUSE	48.703	0.000	45.703	0.000	0.552	0.000	0.982	35.583	0.000	0.000	0.000	0.000	
PEAK PCT	37.0	0.0	34.7	0.0	0.4	0.0	0.7	27.1	0.0	0.0	0.0	0.0	
APR													
KWH	8088.	0.	10740.	0.	1570.	0.	904.	2587.	0.	0.	0.	526.	24415.
MAX KW	49.907	0.000	47.706	0.000	47.749	0.000	7.054	25.727	0.000	0.000	0.000	1.460	167.716
DAY/HR	2/10	0/ 0	2/13	0/ 0	27/14	0/ 0	27/16	9/ 8	0/ 0	0/ 0	0/ 0	1/ 2	27/14
PEAK ENDUSE	49.435	0.000	40.939	0.000	47.749	0.000	7.016	22.576	0.000	0.000	0.000	0.000	
PEAK PCT	29.5	0.0	24.4	0.0	28.5	0.0	4.2	13.5	0.0	0.0	0.0	0.0	
MAY													
KWH	10615.	0.	12873.	0.	6099.	0.	1595.	3939.	0.	0.	0.	508.	35630.
MAX KW	49.907	0.000	47.706	0.000	85.541	0.000	6.478	33.405	0.000	0.000	0.000	1.460	211.265
DAY/HR	1/10	0/ 0	1/13	0/ 0	23/15	0/ 0	23/12	24/15	0/ 0	0/ 0	0/ 0	1/ 2	23/14
PEAK ENDUSE	49.435	0.000	40.939	0.000	84.005	0.000	6.478	30.407	0.000	0.000	0.000	0.000	
PEAK PCT	23.4	0.0	19.4	0.0	39.8	0.0	3.1	14.4	0.0	0.0	0.0	0.0	
JUN													
KWH	10144.	0.	12064.	0.	9965.	0.	1466.	5071.	0.	0.	0.	448.	39159.
MAX KW	49.907	0.000	47.706	0.000	122.611	0.000	6.478	44.990	0.000	0.000	0.000	1.460	258.440
DAY/HR	1/10	0/ 0	1/13	0/ 0	18/15	0/ 0	8/10	18/13	0/ 0	0/ 0	0/ 0	1/ 2	18/15
PEAK ENDUSE	46.931	0.000	38.937	0.000	122.611	0.000	6.478	43.483	0.000	0.000	0.000	0.000	
PEAK PCT	18.2	0.0	15.1	0.0	47.4	0.0	2.5	16.8	0.0	0.0	0.0	0.0	
JUL													
KWH	8537.	0.	6134.	0.	13570.	0.	1444.	4671.	0.	0.	0.	488.	34843.
MAX KW	44.627	0.000	17.922	0.000	118.823	0.000	6.478	43.898	0.000	0.000	0.000	1.460	217.528
DAY/HR	2/10	0/ 0	2/13	0/ 0	9/14	0/ 0	2/10	2/ 9	0/ 0	0/ 0	0/ 0	1/ 2	9/14
PEAK ENDUSE	44.155	0.000	14.793	0.000	118.823	0.000	6.478	33.279	0.000	0.000	0.000	0.000	
PEAK PCT	20.3	0.0	6.8	0.0	54.6	0.0	3.0	15.3	0.0	0.0	0.0	0.0	
AUG													
KWH	9271.	0.	6232.	0.	11034.	0.	1540.	4025.	0.	0.	0.	533.	32636.
MAX KW	44.627	0.000	17.922	0.000	82.325	0.000	6.478	38.195	0.000	0.000	0.000	1.460	185.699
DAY/HR	1/10	0/ 0	1/13	0/ 0	6/13	0/ 0	2/13	6/11	0/ 0	0/ 0	0/ 0	1/ 2	6/13
PEAK ENDUSE	44.155	0.000	17.922	0.000	82.325	0.000	6.478	34.819	0.000	0.000	0.000	0.000	
PEAK PCT	23.8	0.0	9.7	0.0	44.3	0.0	3.5	18.8	0.0	0.0	0.0	0.0	

REPORT- PS-E Energy End-Use Summary for all Electric Meters WEATHER FILE- NEW YORK LAGUARDI NY
(CONTINUED)

SEP													
KWH	9255.	0.	11461.	0.	8388.	0.	1309.	4193.	0.	0.	0.	526.	35131.
MAX KW	49.907	0.000	47.706	0.000	105.784	0.000	6.478	44.418	0.000	0.000	0.000	1.460	249.626
DAY/HR	4/10	0/ 0	21/13	0/ 0	10/10	0/ 0	4/16	10/12	0/ 0	0/ 0	0/ 0	1/ 2	10/13
PEAK ENDUSE	49.435	0.000	46.206	0.000	103.267	0.000	6.478	44.240	0.000	0.000	0.000	0.000	
PEAK PCT	19.8	0.0	18.5	0.0	41.4	0.0	2.6	17.7	0.0	0.0	0.0	0.0	
OCT													
KWH	10615.	0.	12873.	0.	3313.	0.	1329.	2541.	0.	0.	0.	543.	31215.
MAX KW	49.907	0.000	47.706	0.000	36.653	0.000	6.557	24.636	0.000	0.000	0.000	1.460	143.556
DAY/HR	1/10	0/ 0	1/13	0/ 0	24/15	0/ 0	2/17	29/ 8	0/ 0	0/ 0	0/ 0	1/ 2	24/13
PEAK ENDUSE	49.435	0.000	47.706	0.000	30.411	0.000	6.308	9.695	0.000	0.000	0.000	0.000	
PEAK PCT	34.4	0.0	33.2	0.0	21.2	0.0	4.4	6.8	0.0	0.0	0.0	0.0	
NOV													
KWH	9700.	0.	12001.	0.	1777.	0.	1118.	3495.	0.	0.	0.	559.	28650.
MAX KW	49.907	0.000	47.706	0.000	29.763	0.000	6.435	35.494	0.000	0.000	0.000	1.460	141.872
DAY/HR	1/10	0/ 0	1/13	0/ 0	1/17	0/ 0	13/ 9	27/ 9	0/ 0	0/ 0	0/ 0	1/ 2	28/10
PEAK ENDUSE	49.907	0.000	45.561	0.000	12.486	0.000	6.423	27.496	0.000	0.000	0.000	0.000	
PEAK PCT	35.2	0.0	32.1	0.0	8.8	0.0	4.5	19.4	0.0	0.0	0.0	0.0	
DEC													
KWH	7727.	0.	10400.	0.	255.	0.	509.	4572.	0.	0.	0.	623.	24086.
MAX KW	49.907	0.000	47.706	0.000	11.784	0.000	6.360	35.778	0.000	0.000	0.000	1.460	141.542
DAY/HR	3/10	0/ 0	3/13	0/ 0	11/ 9	0/ 0	11/ 9	3/ 9	0/ 0	0/ 0	0/ 0	1/ 1	11/ 9
PEAK ENDUSE	48.703	0.000	45.703	0.000	11.784	0.000	6.360	28.993	0.000	0.000	0.000	0.000	
PEAK PCT	34.4	0.0	32.3	0.0	8.3	0.0	4.5	20.5	0.0	0.0	0.0	0.0	
	=======	=======	=======	=======	=======	=======	=======	=======	=======	=======	=======	=======	========
KWH	113940.	0.	131460.	0.	57076.	0.	12941.	51590.	0.	0.	0.	6396.	373402.
MAX KW	49.907	0.000	47.706	0.000	122.611	0.000	7.054	44.990	0.000	0.000	0.000	1.460	258.440
MON/DY	1/ 2	0/ 0	1/ 3	0/ 0	6/18	0/ 0	4/27	6/18	0/ 0	0/ 0	0/ 0	1/ 1	6/18
PEAK ENDUSE	46.931	0.000	38.937	0.000	122.611	0.000	6.478	43.483	0.000	0.000	0.000	0.000	
PEAK PCT	18.2	0.0	15.1	0.0	47.4	0.0	2.5	16.8	0.0	0.0	0.0	0.0	

REPORT- PS-E Energy End-Use Summary for all Fuel Meters WEATHER FILE- NEW YORK LAGUARDI NY

	LIGHTS	TASK LIGHTS	MISC EQUIP	SPACE HEATING	SPACE COOLING	HEAT REJECT	PUMPS & AUX	VENT FANS	REFRIG DISPLAY	HT PUMP SUPPLEM	DOMEST HOT WTR	EXT USAGE	TOTAL
JAN													
MBTU	0.	0.	3.	77.	0.	0.	0.	0.	0.	0.	23.	0.	103.
MAX MBTU/HR	0.0	0.0	0.0	0.5	0.0	0.0	0.0	0.0	0.0	0.0	0.1	0.0	0.5
DAY/HR	0/ 0	0/ 0	2/10	2/ 8	0/ 0	0/ 0	0/ 0	0/ 0	0/ 0	0/ 0	22/13	0/ 0	2/ 8
PEAK ENDUSE	0.0	0.0	0.0	0.5	0.0	0.0	0.0	0.0	0.0	0.0	0.0	0.0	
PEAK PCT	0.0	0.0	0.9	92.6	0.0	0.0	0.0	0.0	0.0	0.0	6.5	0.0	
FEB													
MBTU	0.	0.	3.	75.	0.	0.	0.	0.	0.	0.	22.	0.	99.
MAX MBTU/HR	0.0	0.0	0.0	0.5	0.0	0.0	0.0	0.0	0.0	0.0	0.1	0.0	0.6
DAY/HR	0/ 0	0/ 0	1/10	5/ 9	0/ 0	0/ 0	0/ 0	0/ 0	0/ 0	0/ 0	6/13	0/ 0	5/ 9
PEAK ENDUSE	0.0	0.0	0.0	0.5	0.0	0.0	0.0	0.0	0.0	0.0	0.0	0.0	
PEAK PCT	0.0	0.0	0.9	93.6	0.0	0.0	0.0	0.0	0.0	0.0	5.5	0.0	
MAR													
MBTU	0.	0.	3.	48.	0.	0.	0.	0.	0.	0.	24.	0.	75.
MAX MBTU/HR	0.0	0.0	0.0	0.3	0.0	0.0	0.0	0.0	0.0	0.0	0.1	0.0	0.4
DAY/HR	0/ 0	0/ 0	1/10	5/ 8	0/ 0	0/ 0	0/ 0	0/ 0	0/ 0	0/ 0	9/13	0/ 0	5/ 8
PEAK ENDUSE	0.0	0.0	0.0	0.3	0.0	0.0	0.0	0.0	0.0	0.0	0.0	0.0	
PEAK PCT	0.0	0.0	1.2	89.4	0.0	0.0	0.0	0.0	0.0	0.0	9.4	0.0	
APR													
MBTU	0.	0.	3.	30.	0.	0.	0.	0.	0.	0.	23.	0.	55.
MAX MBTU/HR	0.0	0.0	0.0	0.2	0.0	0.0	0.0	0.0	0.0	0.0	0.1	0.0	0.3
DAY/HR	0/ 0	0/ 0	2/10	23/ 8	0/ 0	0/ 0	0/ 0	0/ 0	0/ 0	0/ 0	2/13	0/ 0	25/13
PEAK ENDUSE	0.0	0.0	0.0	0.2	0.0	0.0	0.0	0.0	0.0	0.0	0.1	0.0	
PEAK PCT	0.0	0.0	2.1	67.2	0.0	0.0	0.0	0.0	0.0	0.0	30.7	0.0	
MAY													
MBTU	0.	0.	3.	11.	0.	0.	0.	0.	0.	0.	21.	0.	36.
MAX MBTU/HR	0.0	0.0	0.0	0.2	0.0	0.0	0.0	0.0	0.0	0.0	0.1	0.0	0.2
DAY/HR	0/ 0	0/ 0	1/10	8/22	0/ 0	0/ 0	0/ 0	0/ 0	0/ 0	0/ 0	19/13	0/ 0	19/12
PEAK ENDUSE	0.0	0.0	0.0	0.1	0.0	0.0	0.0	0.0	0.0	0.0	0.1	0.0	
PEAK PCT	0.0	0.0	1.7	65.7	0.0	0.0	0.0	0.0	0.0	0.0	32.6	0.0	
JUN													
MBTU	0.	0.	3.	0.	0.	0.	0.	0.	0.	0.	18.	0.	22.
MAX MBTU/HR	0.0	0.0	0.0	0.0	0.0	0.0	0.0	0.0	0.0	0.0	0.1	0.0	0.1
DAY/HR	0/ 0	0/ 0	1/10	0/ 0	0/ 0	0/ 0	0/ 0	0/ 0	0/ 0	0/ 0	6/13	0/ 0	6/13
PEAK ENDUSE	0.0	0.0	0.0	0.0	0.0	0.0	0.0	0.0	0.0	0.0	0.1	0.0	
PEAK PCT	0.0	0.0	7.8	0.0	0.0	0.0	0.0	0.0	0.0	0.0	92.2	0.0	
JUL													
MBTU	0.	0.	3.	0.	0.	0.	0.	0.	0.	0.	17.	0.	21.
MAX MBTU/HR	0.0	0.0	0.0	0.0	0.0	0.0	0.0	0.0	0.0	0.0	0.1	0.0	0.1
DAY/HR	0/ 0	0/ 0	2/10	0/ 0	0/ 0	0/ 0	0/ 0	0/ 0	0/ 0	0/ 0	15/13	0/ 0	18/13
PEAK ENDUSE	0.0	0.0	0.0	0.0	0.0	0.0	0.0	0.0	0.0	0.0	0.1	0.0	
PEAK PCT	0.0	0.0	8.5	0.0	0.0	0.0	0.0	0.0	0.0	0.0	91.5	0.0	
AUG													
MBTU	0.	0.	3.	0.	0.	0.	0.	0.	0.	0.	16.	0.	19.
MAX MBTU/HR	0.0	0.0	0.0	0.0	0.0	0.0	0.0	0.0	0.0	0.0	0.1	0.0	0.1
DAY/HR	0/ 0	0/ 0	1/10	0/ 0	0/ 0	0/ 0	0/ 0	0/ 0	0/ 0	0/ 0	19/13	0/ 0	20/13
PEAK ENDUSE	0.0	0.0	0.0	0.0	0.0	0.0	0.0	0.0	0.0	0.0	0.1	0.0	
PEAK PCT	0.0	0.0	9.0	0.0	0.0	0.0	0.0	0.0	0.0	0.0	91.0	0.0	

REPORT- PS-E Energy End-Use Summary for all Fuel Meters WEATHER FILE- NEW YORK LAGUARDI NY

(CONTINUED)

SEP													
MBTU	0.	0.	3.	0.	0.	0.	0.	0.	0.	0.	16.	0.	19.
MAX MBTU/HR	0.0	0.0	0.0	0.0	0.0	0.0	0.0	0.0	0.0	0.0	0.1	0.0	0.1
DAY/HR	0/ 0	0/ 0	4/10	0/ 0	0/ 0	0/ 0	0/ 0	0/ 0	0/ 0	0/ 0	30/13	0/ 0	14/13
PEAK ENDUSE	0.0	0.0	0.0	0.0	0.0	0.0	0.0	0.0	0.0	0.0	0.1	0.0	
PEAK PCT	0.0	0.0	9.0	0.0	0.0	0.0	0.0	0.0	0.0	0.0	91.0	0.0	
OCT													
MBTU	0.	0.	3.	13.	0.	0.	0.	0.	0.	0.	17.	0.	33.
MAX MBTU/HR	0.0	0.0	0.0	0.2	0.0	0.0	0.0	0.0	0.0	0.0	0.1	0.0	0.2
DAY/HR	0/ 0	0/ 0	1/10	31/22	0/ 0	0/ 0	0/ 0	0/ 0	0/ 0	0/ 0	28/13	0/ 0	31/22
PEAK ENDUSE	0.0	0.0	0.0	0.2	0.0	0.0	0.0	0.0	0.0	0.0	0.0	0.0	
PEAK PCT	0.0	0.0	1.8	87.6	0.0	0.0	0.0	0.0	0.0	0.0	10.7	0.0	
NOV													
MBTU	0.	0.	3.	33.	0.	0.	0.	0.	0.	0.	18.	0.	54.
MAX MBTU/HR	0.0	0.0	0.0	0.3	0.0	0.0	0.0	0.0	0.0	0.0	0.1	0.0	0.4
DAY/HR	0/ 0	0/ 0	1/10	26/ 8	0/ 0	0/ 0	0/ 0	0/ 0	0/ 0	0/ 0	27/13	0/ 0	26/ 8
PEAK ENDUSE	0.0	0.0	0.0	0.3	0.0	0.0	0.0	0.0	0.0	0.0	0.0	0.0	
PEAK PCT	0.0	0.0	1.3	91.0	0.0	0.0	0.0	0.0	0.0	0.0	7.7	0.0	
DEC													
MBTU	0.	0.	3.	63.	0.	0.	0.	0.	0.	0.	21.	0.	87.
MAX MBTU/HR	0.0	0.0	0.0	0.4	0.0	0.0	0.0	0.0	0.0	0.0	0.1	0.0	0.4
DAY/HR	0/ 0	0/ 0	3/10	3/ 8	0/ 0	0/ 0	0/ 0	0/ 0	0/ 0	0/ 0	6/13	0/ 0	3/ 8
PEAK ENDUSE	0.0	0.0	0.0	0.4	0.0	0.0	0.0	0.0	0.0	0.0	0.0	0.0	
PEAK PCT	0.0	0.0	1.1	91.7	0.0	0.0	0.0	0.0	0.0	0.0	7.2	0.0	
	=======	=======	=======	=======	=======	=======	=======	=======	=======	=======	=======	=======	========
MBTU	0.	0.	38.	349.	0.	0.	0.	0.	0.	0.	236.	0.	623.
MAX MBTU/HR	0.0	0.0	0.0	0.5	0.0	0.0	0.0	0.0	0.0	0.0	0.1	0.0	0.6
MON/DY	0/ 0	0/ 0	1/ 2	2/ 5	0/ 0	0/ 0	0/ 0	0/ 0	0/ 0	0/ 0	3/ 9	0/ 0	2/ 5
PEAK ENDUSE	0.0	0.0	0.0	0.5	0.0	0.0	0.0	0.0	0.0	0.0	0.0	0.0	
PEAK PCT	0.0	0.0	0.9	93.6	0.0	0.0	0.0	0.0	0.0	0.0	5.5	0.0	

REPORT- LV-B Summary of Spaces WEATHER FILE- NEW YORK LAGUARDI NY

NUMBER OF SPACES 121 EXTERIOR 97 INTERIOR 24

SPACE	SPACE*FLOOR MULTIPLIER	SPACE TYPE	AZIM	LIGHTS (WATT / SQFT)	PEOPLE	EQUIP (WATT / SQFT)	INFILTRATION METHOD	ACH	AREA (SQFT)	VOLUME (CUFT)
Spaces on floor: Cellar										
STRS C-C	1.0	INT	0.0	0.66	11.4	0.00	AIR-CHANGE	0.15	262.3	2688.6
STRS B-C	1.0	INT	0.0	0.66	1.1	0.00	AIR-CHANGE	0.15	333.4	3417.4
WATER C01	1.0	INT	0.0	0.42	2.8	0.00	AIR-CHANGE	0.15	852.0	8732.8
ELEC C02	1.0	INT	0.0	0.42	2.4	0.00	AIR-CHANGE	0.15	707.6	7253.0
CORR Cellar	1.0	INT	0.0	0.63	4.2	0.00	AIR-CHANGE	0.15	1274.2	13060.8
Spaces on floor: 1st Floor										
STRS A-1	1.0	EXT	0.0	0.66	1.1	0.00	AIR-CHANGE	0.15	336.2	4706.7
CR 102	1.0	EXT	0.0	1.12	41.8	1.52	AIR-CHANGE	0.15	960.8	9608.4
STOR 103	1.0	EXT	0.0	0.57	0.3	0.00	AIR-CHANGE	0.15	86.3	862.8
OFF 104	1.0	EXT	0.0	1.12	3.4	5.30	AIR-CHANGE	0.15	341.6	3416.2
OFF 106	1.0	EXT	0.0	1.12	5.3	5.30	AIR-CHANGE	0.15	526.6	5265.9
V-1	1.0	EXT	0.0	0.63	0.6	0.00	NO-INFILT.	0.00	192.2	1922.3
Caf 108	1.0	EXT	0.0	0.65	130.6	0.25	AIR-CHANGE	0.15	2253.2	22532.1
RR 108	1.0	EXT	0.0	0.88	0.9	0.00	AIR-CHANGE	0.15	263.2	2632.5
CORR-BOH	1.0	EXT	0.0	0.63	1.1	0.00	AIR-CHANGE	0.15	323.0	3230.0
RR 115	1.0	EXT	0.0	0.88	0.3	0.00	AIR-CHANGE	0.15	91.7	917.4
STRS C-1	1.0	EXT	0.0	0.66	0.6	0.00	AIR-CHANGE	0.15	171.5	2400.7
STOR 115	1.0	EXT	0.0	0.57	1.2	0.00	AIR-CHANGE	0.15	372.8	3728.0
KITCH 115	1.0	EXT	0.0	1.21	7.7	7.71	AIR-CHANGE	0.15	1541.4	15413.7
STRS B-1	1.0	EXT	0.0	0.66	0.8	0.00	AIR-CHANGE	0.15	250.8	3511.2
MTNG 109	1.0	EXT	0.0	1.11	2.9	5.30	AIR-CHANGE	0.15	293.0	2930.5
ELEV-1	1.0	EXT	0.0	0.00	0.0	0.00	AIR-CHANGE	0.15	193.5	2709.0
Nurse 107	1.0	EXT	0.0	1.12	5.0	5.30	AIR-CHANGE	0.15	499.2	4992.3
CR 105	1.0	EXT	0.0	1.12	38.9	1.52	AIR-CHANGE	0.15	894.7	8947.4
RRs 101,3,5	1.0	EXT	0.0	0.88	0.8	0.00	AIR-CHANGE	0.15	231.0	2309.9
CR 101	1.0	EXT	0.0	1.12	41.1	1.52	AIR-CHANGE	0.15	945.2	9451.8
CORR-CR	1.0	INT	0.0	0.63	2.1	0.00	AIR-CHANGE	0.15	636.6	6366.5
RR 102,4	1.0	INT	0.0	0.88	0.5	0.00	AIR-CHANGE	0.15	148.8	1487.5
JC 113	1.0	INT	0.0	0.57	0.2	0.00	AIR-CHANGE	0.15	54.8	547.5
STOR 111	1.0	INT	0.0	0.57	0.4	0.00	AIR-CHANGE	0.15	122.4	1224.0
STOR 112	1.0	INT	0.0	0.57	0.5	0.00	AIR-CHANGE	0.15	151.6	1515.9
LCKR 115	1.0	INT	0.0	0.68	0.5	0.00	AIR-CHANGE	0.15	162.2	1622.2
LOBBY	1.0	INT	0.0	0.63	2.1	0.00	AIR-CHANGE	0.15	620.1	6200.6
CORR Elev	1.0	EXT	0.0	0.63	2.3	0.00	AIR-CHANGE	0.15	678.5	6785.0
1st Floor Plenum	1.0	EXT	0.0	0.00	0.0	0.00	NO-INFILT.	0.00	12392.8	49571.0
Spaces on floor: 2nd Floor										
STRS A-2	1.0	EXT	0.0	0.66	0.8	0.00	AIR-CHANGE	0.15	252.5	3282.4
STRS B-2	1.0	EXT	0.0	0.66	1.0	0.00	AIR-CHANGE	0.15	290.4	3775.2
STRS C-2	1.0	EXT	0.0	0.66	0.6	0.00	AIR-CHANGE	0.15	171.5	4458.4
ELEV-2	1.0	EXT	0.0	0.00	0.0	0.00	AIR-CHANGE	0.15	193.5	2515.5

REPORT- LV-B Summary of Spaces WEATHER FILE- NEW YORK LAGUARDI NY

(CONTINUED)

CR 202	1.0	EXT	0.0	1.12	42.3	1.52	AIR-CHANGE	0.15	974.0	9740.5
CR 204	1.0	EXT	0.0	1.12	42.0	1.52	AIR-CHANGE	0.15	965.0	9650.2
CR 206	1.0	EXT	0.0	1.12	16.0	1.52	AIR-CHANGE	0.15	368.5	3684.5
CR 210	1.0	EXT	0.0	1.12	40.0	1.52	AIR-CHANGE	0.15	919.5	9194.8
OFF 216	1.0	EXT	0.0	1.12	0.7	5.30	AIR-CHANGE	0.15	66.3	663.4
GYM 216	1.0	EXT	0.0	1.20	168.8	0.25	AIR-CHANGE	0.15	2911.5	75699.5
STAGE 216	1.0	EXT	0.0	1.20	51.5	0.25	AIR-CHANGE	0.15	888.1	23089.6
RR JC 2	1.0	EXT	0.0	0.88	1.5	0.00	AIR-CHANGE	0.15	453.1	4531.3
CR 201	1.0	EXT	0.0	1.12	33.6	1.52	AIR-CHANGE	0.15	773.7	7736.9
CR 203	1.0	EXT	0.0	1.12	33.7	1.52	AIR-CHANGE	0.15	775.0	7749.9
CR 205	1.0	EXT	0.0	1.12	33.1	1.52	AIR-CHANGE	0.15	760.7	7606.6
STOR 207	1.0	EXT	0.0	0.57	0.6	0.00	AIR-CHANGE	0.15	192.7	1927.5
IDF 209	1.0	INT	0.0	0.42	0.3	7.50	AIR-CHANGE	0.15	101.4	1013.6
RR 211	1.0	INT	0.0	0.88	0.2	0.00	AIR-CHANGE	0.15	67.0	670.0
STOR 212	1.0	INT	0.0	0.57	0.6	0.00	AIR-CHANGE	0.15	188.6	1886.3
RR 208-210	1.0	INT	0.0	0.88	0.5	0.00	AIR-CHANGE	0.15	160.0	1599.6
RR 202 204	1.0	INT	0.0	0.88	0.4	0.00	AIR-CHANGE	0.15	126.1	1261.2
CORR-2	1.0	EXT	0.0	0.63	5.2	0.00	AIR-CHANGE	0.15	1561.8	15618.4
2nd Floor Plenum	1.0	EXT	0.0	0.00	0.0	0.00	NO-INFILT.	0.00	8637.3	25911.8
UC-N 2	1.0	EXT	0.0	0.00	0.0	0.00	NO-INFILT.	0.00	38.0	380.3
UC-E 2	1.0	INT	0.0	0.00	0.0	0.00	NO-INFILT.	0.00	53.3	533.2

Spaces on floor: 3rd Floor

STRS A-3	1.0	EXT	0.0	0.66	0.8	0.00	AIR-CHANGE	0.15	252.5	3282.4
STRS B-3	1.0	EXT	0.0	0.66	1.0	0.00	AIR-CHANGE	0.15	290.4	3775.2
ELEV-3	1.0	EXT	0.0	0.00	0.0	0.00	AIR-CHANGE	0.15	193.5	2515.5
RR JC 3	1.0	EXT	0.0	0.88	1.5	0.00	AIR-CHANGE	0.15	453.1	4531.3
RR 309	1.0	INT	0.0	0.88	0.2	0.00	AIR-CHANGE	0.15	67.0	670.0
CORR-3	1.0	EXT	0.0	0.63	5.2	0.00	AIR-CHANGE	0.15	1561.8	15618.4
CR 302	1.0	EXT	0.0	1.12	33.6	1.52	AIR-CHANGE	0.15	772.5	7725.5
CR 304	1.0	EXT	0.0	1.12	34.0	1.52	AIR-CHANGE	0.15	781.1	7811.1
CR 306	1.0	EXT	0.0	1.12	34.2	1.52	AIR-CHANGE	0.15	786.6	7866.4
EXERCISE 310	1.0	EXT	0.0	1.20	25.4	0.00	AIR-CHANGE	0.15	1268.6	12685.9
OFF 308	1.0	INT	0.0	1.12	1.6	5.30	AIR-CHANGE	0.15	164.1	1640.5
CR 301	1.0	EXT	0.0	1.12	33.6	1.52	AIR-CHANGE	0.15	773.7	7736.9
CR 303	1.0	EXT	0.0	1.12	33.7	1.52	AIR-CHANGE	0.15	775.0	7749.9
CR 305	1.0	EXT	0.0	1.12	33.1	1.52	AIR-CHANGE	0.15	760.7	7606.6
STOR 307	1.0	EXT	0.0	0.57	1.0	0.00	AIR-CHANGE	0.15	303.3	3032.8
UC-N 3	1.0	EXT	0.0	0.00	0.0	0.00	NO-INFILT.	0.00	28.9	288.6
UC-E 3	1.0	INT	0.0	0.00	0.0	0.00	NO-INFILT.	0.00	48.1	481.2
3rd Floor Plenum	1.0	EXT	0.0	0.00	0.0	0.00	NO-INFILT.	0.00	8637.3	25911.8

Spaces on floor: 4th Floor

STRS A-4	1.0	EXT	0.0	0.66	0.8	0.00	AIR-CHANGE	0.15	252.5	3282.4
STRS B-4	1.0	EXT	0.0	0.66	1.0	0.00	AIR-CHANGE	0.15	290.4	3775.2
STRS C-4	1.0	EXT	0.0	0.66	0.6	0.00	AIR-CHANGE	0.15	171.5	2229.2
ELEV-4	1.0	EXT	0.0	0.00	0.0	0.00	AIR-CHANGE	0.15	193.5	2515.5
CR 402	1.0	EXT	0.0	1.12	33.6	1.52	AIR-CHANGE	0.15	772.5	7725.5
CR 404	1.0	EXT	0.0	1.12	34.0	1.52	AIR-CHANGE	0.15	781.1	7811.1
CR 406	1.0	EXT	0.0	1.12	36.5	1.52	AIR-CHANGE	0.15	840.6	8405.6
RR JC 4	1.0	EXT	0.0	0.88	1.5	0.00	AIR-CHANGE	0.15	453.1	4531.3
RR 413	1.0	INT	0.0	0.88	0.2	0.00	AIR-CHANGE	0.15	67.0	670.0
MDF 411	1.0	EXT	0.0	0.42	1.0	7.50	AIR-CHANGE	0.15	303.3	3032.8
CORR-4	1.0	EXT	0.0	0.63	5.2	0.00	AIR-CHANGE	0.15	1561.8	15618.4
PROJECT 408	1.0	EXT	0.0	1.11	12.2	5.30	AIR-CHANGE	0.15	1215.0	12150.4

REPORT- LV-B Summary of Spaces WEATHER FILE- NEW YORK LAGUARDI NY

(CONTINUED)

STOR 410	1.0	EXT	0.0	0.57	0.5	0.00	AIR-CHANGE	0.15	163.7	1636.8
STOR 409	1.0	EXT	0.0	0.57	1.1	0.00	AIR-CHANGE	0.15	325.6	3256.2
OFF 407	1.0	EXT	0.0	1.12	5.5	5.30	AIR-CHANGE	0.15	548.4	5483.5
CR 405	1.0	EXT	0.0	1.12	21.6	1.52	AIR-CHANGE	0.15	496.3	4962.5
WORKRM 403	1.0	EXT	0.0	1.11	4.6	5.30	AIR-CHANGE	0.15	461.1	4610.9
BREAK 401	1.0	EXT	0.0	0.66	4.8	5.30	AIR-CHANGE	0.15	478.0	4780.2
UC-N 4	1.0	EXT	0.0	0.00	0.0	0.00	NO-INFILT.	0.00	28.9	288.6
UC-E 4	1.0	EXT	0.0	0.00	0.0	0.00	NO-INFILT.	0.00	48.1	481.2
4th Floor Plenum	1.0	EXT	0.0	0.00	0.0	0.00	NO-INFILT.	0.00	8637.3	25911.8
Spaces on floor: 5th Floor										
STRS A-5	1.0	EXT	0.0	0.66	0.8	0.00	AIR-CHANGE	0.15	252.5	4039.9
STRS B-5	1.0	EXT	0.0	0.66	1.0	0.00	AIR-CHANGE	0.15	290.4	4646.4
ELEV-5	1.0	EXT	0.0	0.00	0.0	0.00	AIR-CHANGE	0.15	193.5	3096.0
CR 502	1.0	EXT	0.0	1.12	33.6	1.52	AIR-CHANGE	0.15	772.5	7725.5
CR 504	1.0	EXT	0.0	1.12	34.0	1.52	AIR-CHANGE	0.15	781.1	7811.1
CR 506	1.0	EXT	0.0	1.12	34.2	1.52	AIR-CHANGE	0.15	786.6	7866.4
RR JC 5	1.0	EXT	0.0	0.88	1.5	0.00	AIR-CHANGE	0.15	453.1	4531.3
RR 511	1.0	INT	0.0	0.88	0.2	0.00	AIR-CHANGE	0.15	67.0	670.0
STOR 509	1.0	EXT	0.0	0.57	1.0	0.00	AIR-CHANGE	0.15	303.3	3032.8
CR 510	1.0	EXT	0.0	1.12	23.8	1.52	AIR-CHANGE	0.15	547.5	5475.2
CR 508	1.0	EXT	0.0	1.12	38.5	1.52	AIR-CHANGE	0.15	885.1	8851.2
CORR-5	1.0	EXT	0.0	0.63	5.2	0.00	AIR-CHANGE	0.15	1561.8	15618.4
CUSTODIAL 505	1.0	EXT	0.0	1.59	6.7	5.30	AIR-CHANGE	0.15	673.3	6733.4
LOCKR 507	1.0	INT	0.0	0.68	0.7	0.00	AIR-CHANGE	0.15	200.6	2006.4
RESOURCE 503	1.0	EXT	0.0	1.11	4.4	5.30	AIR-CHANGE	0.15	441.5	4415.5
LIB 501	1.0	EXT	0.0	1.25	17.3	1.52	AIR-CHANGE	0.15	993.8	9938.1
UC-N 5	1.0	EXT	0.0	0.00	0.0	0.00	NO-INFILT.	0.00	28.9	288.6
UC-E 5	1.0	EXT	0.0	0.00	0.0	0.00	NO-INFILT.	0.00	48.1	481.2
5th Floor Plenum	1.0	EXT	0.0	0.00	0.0	0.00	NO-INFILT.	0.00	8637.3	51823.6
Spaces on floor: PH Floor										
ELEV-PH	1.0	EXT	0.0	0.00	0.0	0.00	AIR-CHANGE	0.15	324.0	4212.0
MECH	1.0	EXT	0.0	0.42	3.5	0.00	AIR-CHANGE	0.15	1053.8	10537.8
STOR-PH	1.0	EXT	0.0	0.57	0.5	0.00	AIR-CHANGE	0.15	151.6	1516.3
STRS A-PH	1.0	EXT	0.0	0.66	1.0	0.00	AIR-CHANGE	0.15	304.7	3047.4
					---				---	---
BUILDING TOTALS					1400.0				106814.9	858595.7

NUMBER OF EXTERIOR SURFACES 181
(U-VALUE INCLUDES OUTSIDE FILM; WINDOW INCLUDES FRAME AND CURB, IF DEFINED)

SURFACE	- - - W I N D O W S - - - U-VALUE (BTU/HR-SQFT-F)	AREA (SQFT)	- - - - W A L L - - - - U-VALUE (BTU/HR-SQFT-F)	AREA (SQFT)	-W A L L + W I N D O W S- U-VALUE (BTU/HR-SQFT-F)	AREA (SQFT)	AZIMUTH
Exterior Wall 2	0.000	0.00	0.100	506.10	0.100	506.10	NORTH
in space: STRS A-1							
Exterior Wall 18	0.000	0.00	0.100	73.00	0.100	73.00	NORTH
in space: KITCH 115							
Exterior Wall 27	0.000	0.00	0.100	265.50	0.100	265.50	NORTH
in space: CR 101							
Exterior Wall 33	0.000	0.00	0.100	29.20	0.100	29.20	NORTH
in space: 1st Floor Plenum							
Exterior Wall 37	0.000	0.00	0.100	106.20	0.100	106.20	NORTH
in space: 1st Floor Plenum							
Exterior Wall 39	0.000	0.00	0.100	352.95	0.100	352.95	NORTH
in space: STRS A-2							
Exterior Wall 52	0.000	0.00	0.100	189.80	0.100	189.80	NORTH
in space: STAGE 216							
Exterior Wall 56	0.000	0.00	0.100	260.50	0.100	260.50	NORTH
in space: CR 201							
Exterior Wall 60	0.000	0.00	0.100	95.00	0.100	95.00	NORTH
in space: CORR-2							
Exterior Wall 67	0.000	0.00	0.100	106.65	0.100	106.65	NORTH
in space: 2nd Floor Plenum							
Exterior Wall 69	0.000	0.00	0.100	352.95	0.100	352.95	NORTH
in space: STRS A-3							
Exterior Wall 74	0.000	0.00	0.100	95.00	0.100	95.00	NORTH
in space: CORR-3							
Exterior Wall 83	0.000	0.00	0.100	260.50	0.100	260.50	NORTH
in space: CR 301							
Exterior Wall 92	0.000	0.00	0.100	106.65	0.100	106.65	NORTH
in space: 3rd Floor Plenum							
Exterior Wall 102	0.000	0.00	0.100	352.95	0.100	352.95	NORTH
in space: STRS A-4							
Exterior Wall 107	0.000	0.00	0.100	234.65	0.100	234.65	NORTH
in space: STRS C-4							
Exterior Wall 114	0.000	0.00	0.100	95.00	0.100	95.00	NORTH
in space: CORR-4							
Exterior Wall 125	0.000	0.00	0.100	260.50	0.100	260.50	NORTH
in space: BREAK 401							
Exterior Wall 100	0.000	0.00	0.100	106.65	0.100	106.65	NORTH
in space: 4th Floor Plenum							
Exterior Wall 131	0.000	0.00	0.100	434.40	0.100	434.40	NORTH
in space: STRS A-5							
Exterior Wall 143	0.000	0.00	0.100	95.00	0.100	95.00	NORTH
in space: CORR-5							
Exterior Wall 149	0.000	0.00	0.100	260.50	0.100	260.50	NORTH
in space: LIB 501							
Exterior Wall 160	0.000	0.00	0.100	213.30	0.100	213.30	NORTH
in space: 5th Floor Plenum							
Exterior Wall 162	0.000	0.00	0.100	263.25	0.100	263.25	NORTH
in space: ELEV-PH							

REPORT- LV-D Details of Exterior Surfaces WEATHER FILE- NEW YORK LAGUARDI NY

(CONTINUED)

Exterior Wall 168	0.000	0.00	0.100	345.50	0.100	345.50	NORTH
in space: MECH							
Exterior Wall 171	0.000	0.00	0.100	221.00	0.100	221.00	NORTH
in space: STRS A-PH							
Exterior Wall 54	0.418	20.25	0.100	160.25	0.135	180.50	EAST
in space: RR JC 2							
Exterior Wall 55	0.418	101.25	0.100	195.75	0.208	297.00	EAST
in space: CR 201							
Exterior Wall 22	0.000	0.00	0.100	140.00	0.100	140.00	EAST
in space: ELEV-1							
Exterior Wall 57	0.418	101.25	0.100	196.25	0.208	297.50	EAST
in space: CR 203							
Exterior Wall 58	0.418	101.25	0.100	190.75	0.210	292.00	EAST
in space: CR 205							
Exterior Wall 59	0.000	0.00	0.100	88.50	0.100	88.50	EAST
in space: STOR 207							
Exterior Wall 23	0.418	20.25	0.100	213.75	0.127	234.00	EAST
in space: Nurse 107							
Exterior Wall 61	0.418	20.25	0.100	64.75	0.176	85.00	EAST
in space: CORR-2							
Exterior Wall 65	0.000	0.00	0.100	79.65	0.100	79.65	EAST
in space: 2nd Floor Plenum							
Exterior Wall 66	0.000	0.00	0.100	304.20	0.100	304.20	EAST
in space: 2nd Floor Plenum							
Exterior Wall 24	0.418	121.50	0.100	215.50	0.215	337.00	EAST
in space: CR 105							
Exterior Wall 62	0.000	0.00	0.100	39.00	0.100	39.00	EAST
in space: UC-N 2							
Exterior Wall 25	0.000	0.00	0.100	87.00	0.100	87.00	EAST
in space: RRs 101,3,5							
Exterior Wall 70	0.418	9.00	0.100	147.00	0.118	156.00	EAST
in space: STRS B-3							
Exterior Wall 71	0.000	0.00	0.100	130.00	0.100	130.00	EAST
in space: ELEV-3							
Exterior Wall 73	0.418	20.25	0.100	160.25	0.135	180.50	EAST
in space: RR JC 3							
Exterior Wall 26	0.418	121.50	0.100	234.50	0.208	356.00	EAST
in space: CR 101							
Exterior Wall 75	0.418	20.25	0.100	64.75	0.176	85.00	EAST
in space: CORR-3							
Exterior Wall 82	0.418	101.25	0.100	195.75	0.208	297.00	EAST
in space: CR 301							
Exterior Wall 16	0.000	0.00	0.100	116.00	0.100	116.00	EAST
in space: STOR 115							
Exterior Wall 84	0.418	101.25	0.100	196.25	0.208	297.50	EAST
in space: CR 303							
Exterior Wall 85	0.418	101.25	0.100	190.75	0.210	292.00	EAST
in space: CR 305							
Exterior Wall 86	0.000	0.00	0.100	88.50	0.100	88.50	EAST
in space: STOR 307							
Exterior Wall 87	0.000	0.00	0.100	39.00	0.100	39.00	EAST
in space: UC-N 3							
Exterior Wall 90	0.000	0.00	0.100	79.65	0.100	79.65	EAST
in space: 3rd Floor Plenum							
Exterior Wall 91	0.000	0.00	0.100	304.20	0.100	304.20	EAST
in space: 3rd Floor Plenum							
Exterior Wall 28	0.418	20.25	0.100	64.75	0.176	85.00	EAST
in space: CORR Elev							

REPORT- LV-D Details of Exterior Surfaces WEATHER FILE- NEW YORK LAGUARDI NY

(CONTINUED)

Exterior Wall 31	0.000	0.00	0.100	46.40	0.100	46.40	EAST
in space: 1st Floor Plenum							
Exterior Wall 103	0.418	9.00	0.100	147.00	0.118	156.00	EAST
in space: STRS B-4							
Exterior Wall 106	0.000	0.00	0.100	123.50	0.100	123.50	EAST
in space: STRS C-4							
Exterior Wall 32	0.000	0.00	0.100	150.40	0.100	150.40	EAST
in space: 1st Floor Plenum							
Exterior Wall 109	0.000	0.00	0.100	130.00	0.100	130.00	EAST
in space: ELEV-4							
Exterior Wall 129	0.418	20.25	0.100	160.25	0.135	180.50	EAST
in space: RR JC 4							
Exterior Wall 113	0.000	0.00	0.100	88.50	0.100	88.50	EAST
in space: MDF 411							
Exterior Wall 17	0.000	0.00	0.100	376.00	0.100	376.00	EAST
in space: KITCH 115							
Exterior Wall 116	0.418	20.25	0.100	64.75	0.176	85.00	EAST
in space: CORR-4							
Exterior Wall 120	0.000	0.00	0.100	125.00	0.100	125.00	EAST
in space: STOR 409							
Exterior Wall 121	0.418	40.50	0.100	170.00	0.161	210.50	EAST
in space: OFF 407							
Exterior Wall 122	0.418	60.75	0.100	129.75	0.201	190.50	EAST
in space: CR 405							
Exterior Wall 123	0.418	40.50	0.100	136.50	0.173	177.00	EAST
in space: WORKRM 403							
Exterior Wall 124	0.418	81.00	0.100	102.50	0.240	183.50	EAST
in space: BREAK 401							
Exterior Wall 35	0.000	0.00	0.100	106.20	0.100	106.20	EAST
in space: 1st Floor Plenum							
Exterior Wall 126	0.000	0.00	0.100	39.00	0.100	39.00	EAST
in space: UC-N 4							
Exterior Wall 98	0.000	0.00	0.100	79.65	0.100	79.65	EAST
in space: 4th Floor Plenum							
Exterior Wall 99	0.000	0.00	0.100	304.20	0.100	304.20	EAST
in space: 4th Floor Plenum							
Exterior Wall 36	0.000	0.00	0.100	405.60	0.100	405.60	EAST
in space: 1st Floor Plenum							
Exterior Wall 14	0.000	0.00	0.100	133.00	0.100	133.00	EAST
in space: STRS C-1							
Exterior Wall 132	0.000	0.00	0.100	192.00	0.100	192.00	EAST
in space: STRS B-5							
Exterior Wall 134	0.000	0.00	0.100	160.00	0.100	160.00	EAST
in space: ELEV-5							
Exterior Wall 139	0.418	20.25	0.100	160.25	0.135	180.50	EAST
in space: RR JC 5							
Exterior Wall 140	0.000	0.00	0.100	88.50	0.100	88.50	EAST
in space: STOR 509							
Exterior Wall 19	0.418	9.00	0.100	159.00	0.117	168.00	EAST
in space: STRS B-1							
Exterior Wall 145	0.418	20.25	0.100	64.75	0.176	85.00	EAST
in space: CORR-5							
Exterior Wall 146	0.418	101.25	0.100	234.25	0.196	335.50	EAST
in space: CUSTODIAL 505							
Exterior Wall 147	0.418	40.50	0.100	129.00	0.176	169.50	EAST
in space: RESOURCE 503							
Exterior Wall 148	0.418	121.50	0.100	260.00	0.201	381.50	EAST
in space: LIB 501							

REPORT- LV-D Details of Exterior Surfaces WEATHER FILE- NEW YORK LAGUARDI NY

(CONTINUED)

Exterior Wall 40	0.418	9.00	0.100	147.00	0.118	156.00	EAST
in space: STRS B-2							
Exterior Wall 150	0.000	0.00	0.100	39.00	0.100	39.00	EAST
in space: UC-N 5							
Exterior Wall 158	0.000	0.00	0.100	159.30	0.100	159.30	EAST
in space: 5th Floor Plenum							
Exterior Wall 159	0.000	0.00	0.100	608.40	0.100	608.40	EAST
in space: 5th Floor Plenum							
Exterior Wall 42	0.000	0.00	0.100	247.00	0.100	247.00	EAST
in space: STRS C-2							
Exterior Wall 161	0.000	0.00	0.100	208.00	0.100	208.00	EAST
in space: ELEV-PH							
Exterior Wall 43	0.000	0.00	0.100	130.00	0.100	130.00	EAST
in space: ELEV-2							
Exterior Wall 167	0.000	0.00	0.100	305.00	0.100	305.00	EAST
in space: MECH							
Exterior Wall 51	0.000	0.00	0.100	1279.20	0.100	1279.20	EAST
in space: STAGE 216							
Exterior Wall 20	0.418	60.75	0.100	119.75	0.207	180.50	EAST
in space: MTNG 109							
Exterior Wall 97	0.000	0.00	0.100	7.05	0.100	7.05	SOUTH
in space: 4th Floor Plenum							
Exterior Wall 105	0.000	0.00	0.100	234.65	0.100	234.65	SOUTH
in space: STRS C-4							
Exterior Wall 13	0.000	0.00	0.100	252.70	0.100	252.70	SOUTH
in space: STRS C-1							
Exterior Wall 64	0.000	0.00	0.100	7.05	0.100	7.05	SOUTH
in space: 2nd Floor Plenum							
Exterior Wall 11	0.000	0.00	0.100	340.00	0.100	340.00	SOUTH
in space: CORR-BOH							
Exterior Wall 128	0.000	0.00	0.100	23.50	0.100	23.50	SOUTH
in space: RR JC 4							
Exterior Wall 133	0.000	0.00	0.100	387.20	0.100	387.20	SOUTH
in space: STRS B-5							
Exterior Wall 53	0.000	0.00	0.100	23.50	0.100	23.50	SOUTH
in space: RR JC 2							
Exterior Wall 138	0.000	0.00	0.100	23.50	0.100	23.50	SOUTH
in space: RR JC 5							
Exterior Wall 30	0.000	0.00	0.100	198.40	0.100	198.40	SOUTH
in space: 1st Floor Plenum							
Exterior Wall 15	0.000	0.00	0.100	66.50	0.100	66.50	SOUTH
in space: STOR 115							
Exterior Wall 152	0.000	0.00	0.100	151.50	0.100	151.50	SOUTH
in space: CR 510							
Exterior Wall 115	0.000	0.00	0.100	85.00	0.100	85.00	SOUTH
in space: CORR-4							
Exterior Wall 144	0.000	0.00	0.100	85.00	0.100	85.00	SOUTH
in space: CORR-5							
Exterior Wall 12	0.000	0.00	0.100	89.50	0.100	89.50	SOUTH
in space: RR 115							
Exterior Wall 118	0.000	0.00	0.100	98.00	0.100	98.00	SOUTH
in space: PROJECT 408							
Exterior Wall 119	0.000	0.00	0.100	53.50	0.100	53.50	SOUTH
in space: STOR 410							
Exterior Wall 89	0.000	0.00	0.100	7.05	0.100	7.05	SOUTH
in space: 3rd Floor Plenum							
Exterior Wall 41	0.418	50.00	0.100	419.30	0.134	469.30	SOUTH
in space: STRS C-2							

REPORT- LV-D Details of Exterior Surfaces WEATHER FILE- NEW YORK LAGUARDI NY

(CONTINUED)

Exterior Wall 21	0.000	0.00	0.100	23.50	0.100	23.50	SOUTH
in space: MTNG 109							
Exterior Wall 151	0.000	0.00	0.100	125.00	0.100	125.00	SOUTH
in space: UC-E 5							
Exterior Wall 154	0.000	0.00	0.100	90.90	0.100	90.90	SOUTH
in space: 5th Floor Plenum							
Exterior Wall 155	0.000	0.00	0.100	75.00	0.100	75.00	SOUTH
in space: 5th Floor Plenum							
Exterior Wall 156	0.000	0.00	0.100	51.00	0.100	51.00	SOUTH
in space: 5th Floor Plenum							
Exterior Wall 157	0.000	0.00	0.100	14.10	0.100	14.10	SOUTH
in space: 5th Floor Plenum							
Exterior Wall 72	0.000	0.00	0.100	23.50	0.100	23.50	SOUTH
in space: RR JC 3							
Exterior Wall 34	0.000	0.00	0.100	9.40	0.100	9.40	SOUTH
in space: 1st Floor Plenum							
Exterior Wall 50	0.418	125.00	0.100	1164.60	0.131	1289.60	SOUTH
in space: GYM 216							
Exterior Wall 104	0.000	0.00	0.100	314.60	0.100	314.60	SOUTH
in space: STRS B-4							
Exterior Wall 127	0.000	0.00	0.100	125.00	0.100	125.00	SOUTH
in space: UC-E 4							
Exterior Wall 164	0.000	0.00	0.100	263.25	0.100	263.25	SOUTH
in space: ELEV-PH							
Exterior Wall 166	0.000	0.00	0.100	345.50	0.100	345.50	SOUTH
in space: MECH							
Exterior Wall 94	0.000	0.00	0.100	45.45	0.100	45.45	SOUTH
in space: 4th Floor Plenum							
Exterior Wall 95	0.000	0.00	0.100	37.50	0.100	37.50	SOUTH
in space: 4th Floor Plenum							
Exterior Wall 170	0.000	0.00	0.100	146.50	0.100	146.50	SOUTH
in space: STOR-PH							
Exterior Wall 96	0.000	0.00	0.100	25.50	0.100	25.50	SOUTH
in space: 4th Floor Plenum							
Exterior Wall 173	0.000	0.00	0.100	74.50	0.100	74.50	SOUTH
in space: STRS A-PH							
Exterior Wall 7	0.466	122.43	0.100	58.08	0.348	180.50	WEST
in space: V-1							
Exterior Wall 8	0.418	324.00	0.100	517.50	0.222	841.50	WEST
in space: Caf 108							
Exterior Wall 108	0.000	0.00	0.100	123.50	0.100	123.50	WEST
in space: STRS C-4							
Exterior Wall 9	0.000	0.00	0.100	130.00	0.100	130.00	WEST
in space: RR 108							
Exterior Wall 135	0.418	101.25	0.100	195.25	0.208	296.50	WEST
in space: CR 502							
Exterior Wall 136	0.418	101.25	0.100	181.25	0.214	282.50	WEST
in space: CR 504							
Exterior Wall 137	0.418	101.25	0.100	183.25	0.213	284.50	WEST
in space: CR 506							
Exterior Wall 110	0.418	101.25	0.100	195.25	0.208	296.50	WEST
in space: CR 402							
Exterior Wall 111	0.418	101.25	0.100	181.25	0.214	282.50	WEST
in space: CR 404							
Exterior Wall 112	0.418	101.25	0.100	202.75	0.206	304.00	WEST
in space: CR 406							
Exterior Wall 141	0.418	81.00	0.100	140.50	0.216	221.50	WEST
in space: CR 510							

REPORT- LV-D Details of Exterior Surfaces WEATHER FILE- NEW YORK LAGUARDI NY

(CONTINUED)

Exterior Wall 38	0.418	18.00	0.100	102.90	0.147	120.90	WEST
in space: STRS A-2							
Exterior Wall 142	0.418	81.00	0.100	240.50	0.180	321.50	WEST
in space: CR 508							
Exterior Wall 10	0.000	0.00	0.100	95.00	0.100	95.00	WEST
in space: CORR-BOH							
Exterior Wall 76	0.418	101.25	0.100	195.25	0.208	296.50	WEST
in space: CR 302							
Exterior Wall 77	0.418	101.25	0.100	181.25	0.214	282.50	WEST
in space: CR 304							
Exterior Wall 78	0.418	101.25	0.100	183.25	0.213	284.50	WEST
in space: CR 306							
Exterior Wall 79	0.000	0.00	0.100	105.50	0.100	105.50	WEST
in space: EXERCISE 310							
Exterior Wall 117	0.418	162.00	0.100	361.50	0.198	523.50	WEST
in space: PROJECT 408							
Exterior Wall 80	0.418	162.00	0.100	275.50	0.218	437.50	WEST
in space: EXERCISE 310							
Exterior Wall 29	0.000	0.00	0.100	797.40	0.100	797.40	WEST
in space: 1st Floor Plenum							
Exterior Wall 1	0.418	9.00	0.100	121.20	0.122	130.20	WEST
in space: STRS A-1							
Exterior Wall 153	0.000	0.00	0.100	843.90	0.100	843.90	WEST
in space: 5th Floor Plenum							
Exterior Wall 3	0.418	101.25	0.100	246.25	0.192	347.50	WEST
in space: CR 102							
Exterior Wall 4	0.000	0.00	0.100	85.00	0.100	85.00	WEST
in space: STOR 103							
Exterior Wall 44	0.418	121.50	0.100	268.00	0.199	389.50	WEST
in space: CR 202							
Exterior Wall 63	0.000	0.00	0.100	421.95	0.100	421.95	WEST
in space: 2nd Floor Plenum							
Exterior Wall 88	0.000	0.00	0.100	421.95	0.100	421.95	WEST
in space: 3rd Floor Plenum							
Exterior Wall 45	0.418	121.50	0.100	253.00	0.203	374.50	WEST
in space: CR 204							
Exterior Wall 46	0.418	40.50	0.100	120.00	0.180	160.50	WEST
in space: CR 206							
Exterior Wall 93	0.000	0.00	0.100	421.95	0.100	421.95	WEST
in space: 4th Floor Plenum							
Exterior Wall 47	0.418	121.50	0.100	249.00	0.204	370.50	WEST
in space: CR 210							
Exterior Wall 163	0.000	0.00	0.100	208.00	0.100	208.00	WEST
in space: ELEV-PH							
Exterior Wall 48	0.418	40.50	0.100	71.00	0.215	111.50	WEST
in space: OFF 216							
Exterior Wall 165	0.000	0.00	0.100	98.50	0.100	98.50	WEST
in space: MECH							
Exterior Wall 101	0.418	18.00	0.100	102.90	0.147	120.90	WEST
in space: STRS A-4							
Exterior Wall 49	0.418	150.00	0.100	1376.20	0.131	1526.20	WEST
in space: GYM 216							
Exterior Wall 68	0.418	18.00	0.100	102.90	0.147	120.90	WEST
in space: STRS A-3							
Exterior Wall 169	0.000	0.00	0.100	103.50	0.100	103.50	WEST
in space: STOR-PH							
Exterior Wall 5	0.418	60.75	0.100	83.75	0.234	144.50	WEST
in space: OFF 104							

REPORT- LV-D Details of Exterior Surfaces WEATHER FILE- NEW YORK LAGUARDI NY

(CONTINUED)

Exterior Wall 6	0.418	20.25	0.100	149.25	0.138	169.50	WEST
in space: OFF 106							
Exterior Wall 172	0.000	0.00	0.100	103.00	0.100	103.00	WEST
in space: STRS A-PH							
Exterior Wall 130	0.418	18.00	0.100	130.80	0.138	148.80	WEST
in space: STRS A-5							
Exterior Wall 175	0.000	0.00	0.032	2911.52	0.032	2911.52	ROOF
in space: GYM 216							
Exterior Wall 180	0.000	0.00	0.032	1053.77	0.032	1053.77	ROOF
in space: MECH							
Exterior Wall 176	0.000	0.00	0.032	171.48	0.032	171.48	ROOF
in space: STRS C-4							
Exterior Wall 179	0.000	0.00	0.032	324.00	0.032	324.00	ROOF
in space: ELEV-PH							
Exterior Wall 182	0.000	0.00	0.032	151.63	0.032	151.63	ROOF
in space: STOR-PH							
Exterior Wall 178	0.000	0.00	0.032	7249.13	0.032	7249.13	ROOF
in space: 5th Floor Plenum							
Exterior Wall 177	0.000	0.00	0.032	290.40	0.032	290.40	ROOF
in space: STRS B-5							
Exterior Wall 174	0.000	0.00	0.032	888.06	0.032	888.06	ROOF
in space: STAGE 216							
Exterior Wall 181	0.000	0.00	0.032	304.74	0.032	304.74	ROOF
in space: STRS A-PH							
Underground Wall 1	0.000	0.00	0.024	176.30	0.024	176.30	UNDERGRND
in space: STRS C-C							
Underground Wall 2	0.000	0.00	0.024	156.31	0.024	156.31	UNDERGRND
in space: STRS C-C							
Underground Wall 3	0.000	0.00	0.024	176.30	0.024	176.30	UNDERGRND
in space: STRS C-C							
Underground Wall 14	0.000	0.00	0.024	262.30	0.024	262.30	UNDERGRND
in space: STRS C-C							
Underground Wall 4	0.000	0.00	0.024	116.34	0.024	116.34	UNDERGRND
in space: STRS B-C							
Underground Wall 5	0.000	0.00	0.024	300.84	0.024	300.84	UNDERGRND
in space: STRS B-C							
Underground Wall 6	0.000	0.00	0.024	219.35	0.024	219.35	UNDERGRND
in space: STRS B-C							
Underground Wall 15	0.000	0.00	0.024	333.41	0.024	333.41	UNDERGRND
in space: STRS B-C							
Underground Wall 7	0.000	0.00	0.024	317.24	0.024	317.24	UNDERGRND
in space: WATER C01							
Underground Wall 8	0.000	0.00	0.024	282.39	0.024	282.39	UNDERGRND
in space: WATER C01							
Underground Wall 16	0.000	0.00	0.024	851.98	0.024	851.98	UNDERGRND
in space: WATER C01							
Underground Wall 9	0.000	0.00	0.024	234.72	0.024	234.72	UNDERGRND
in space: ELEC C02							
Underground Wall 17	0.000	0.00	0.024	707.61	0.024	707.61	UNDERGRND
in space: ELEC C02							
Underground Wall 10	0.000	0.00	0.024	205.51	0.024	205.51	UNDERGRND
in space: CORR Cellar							
Underground Wall 11	0.000	0.00	0.024	520.70	0.024	520.70	UNDERGRND
in space: CORR Cellar							
Underground Wall 12	0.000	0.00	0.024	121.97	0.024	121.97	UNDERGRND
in space: CORR Cellar							
Underground Wall 13	0.000	0.00	0.024	449.98	0.024	449.98	UNDERGRND
in space: CORR Cellar							
Underground Wall 18	0.000	0.00	0.024	1274.22	0.024	1274.22	UNDERGRND
in space: CORR Cellar							

REPORT- LV-D Details of Exterior Surfaces WEATHER FILE- NEW YORK LAGUARDI NY

(CONTINUED)

SURFACE	- - - W I N D O W S - - - U-VALUE (BTU/HR-SQFT-F)	AREA (SQFT)	- - - - W A L L - - - - U-VALUE (BTU/HR-SQFT-F)	AREA (SQFT)	-W A L L + W I N D O W S- U-VALUE (BTU/HR-SQFT-F)	AREA (SQFT)	AZIMUTH
Underground Wall 21 in space: STRS A-1	0.000	0.00	0.024	336.19	0.024	336.19	UNDERGRND
Underground Wall 22 in space: CR 102	0.000	0.00	0.024	960.84	0.024	960.84	UNDERGRND
Underground Wall 23 in space: STOR 103	0.000	0.00	0.024	86.28	0.024	86.28	UNDERGRND
Underground Wall 24 in space: OFF 104	0.000	0.00	0.024	341.62	0.024	341.62	UNDERGRND
Underground Wall 25 in space: OFF 106	0.000	0.00	0.024	526.59	0.024	526.59	UNDERGRND
Underground Wall 26 in space: V-1	0.000	0.00	0.024	192.23	0.024	192.23	UNDERGRND
Underground Wall 28 in space: Caf 108	0.000	0.00	0.024	2253.21	0.024	2253.21	UNDERGRND
Underground Wall 31 in space: STRS C-1	0.000	0.00	0.024	171.48	0.024	171.48	UNDERGRND
Underground Wall 19 in space: KITCH 115	0.000	0.00	0.024	1541.37	0.024	1541.37	UNDERGRND
Underground Wall 29 in space: MTNG 109	0.000	0.00	0.024	293.05	0.024	293.05	UNDERGRND
Underground Wall 30 in space: ELEV-1	0.000	0.00	0.024	193.50	0.024	193.50	UNDERGRND
Underground Wall 32 in space: Nurse 107	0.000	0.00	0.024	499.23	0.024	499.23	UNDERGRND
Underground Wall 33 in space: CR 105	0.000	0.00	0.024	894.74	0.024	894.74	UNDERGRND
Underground Wall 34 in space: RRs 101,3,5	0.000	0.00	0.024	230.99	0.024	230.99	UNDERGRND
Underground Wall 35 in space: CR 101	0.000	0.00	0.024	945.18	0.024	945.18	UNDERGRND
Underground Wall 36 in space: CORR-CR	0.000	0.00	0.024	636.65	0.024	636.65	UNDERGRND
Underground Wall 37 in space: RR 102,4	0.000	0.00	0.024	148.75	0.024	148.75	UNDERGRND
Underground Wall 38 in space: JC 113	0.000	0.00	0.024	54.75	0.024	54.75	UNDERGRND
Underground Wall 39 in space: STOR 111	0.000	0.00	0.024	122.40	0.024	122.40	UNDERGRND
Underground Wall 20 in space: LCKR 115	0.000	0.00	0.024	162.22	0.024	162.22	UNDERGRND
Underground Wall 41 in space: LCKR 115	0.000	0.00	0.024	162.22	0.024	162.22	UNDERGRND
Underground Wall 40 in space: LOBBY	0.000	0.00	0.024	620.06	0.024	620.06	UNDERGRND
Underground Wall 42 in space: CORR Elev	0.000	0.00	0.024	678.50	0.024	678.50	UNDERGRND

REPORT- LV-D Details of Exterior Surfaces WEATHER FILE- NEW YORK LAGUARDI NY

(CONTINUED)

	AVERAGE U-VALUE/WINDOWS (BTU/HR-SQFT-F)	AVERAGE U-VALUE/WALLS (BTU/HR-SQFT-F)	AVERAGE U-VALUE WALLS+WINDOWS (BTU/HR-SQFT-F)	WINDOW AREA (SQFT)	WALL AREA (SQFT)	WINDOW+WALL AREA (SQFT)
NORTH	0.000	0.100	0.100	0.00	5682.70	5682.70
EAST	0.418	0.100	0.139	1635.75	11695.30	13331.05
SOUTH	0.418	0.100	0.109	175.00	5507.70	5682.70
WEST	0.420	0.100	0.165	2702.43	10628.63	13331.05
ROOF	0.000	0.032	0.032	0.00	13344.72	13344.72
ALL WALLS	0.420	0.100	0.138	4513.17	33514.32	38027.50
WALLS+ROOFS	0.420	0.080	0.110	4513.17	46859.04	51372.21
UNDERGRND	0.000	0.024	0.024	0.00	18759.51	18759.51
BUILDING	0.420	0.064	0.087	4513.17	65618.55	70131.72

NUMBER OF WINDOWS 106

(Note: u-values include outside air film)

WINDOW NAME	MULTIPLIER	GLASS AREA (SQFT)	GLASS HEIGHT (FT)	GLASS WIDTH (FT)	LOCATION OF ORIGIN IN SURFACE COORDINATES X (FT)	Y (FT)	FRAME AREA (SQFT)	CURB AREA (SQFT)	FRAME U-VALUE (BTU/HR-SQFT-F)	CURB U-VALUE (BTU/HR-SQFT-F)
Window 25	1.0	9.00	3.00	3.00	3.20	9.00	0.00	0.00	0.908	0.000
Window 34	1.0	20.25	6.75	3.00	7.25	3.00	0.00	0.00	0.908	0.000
Window 35	1.0	81.00	6.75	12.00	14.50	3.00	0.00	0.00	0.908	0.000
Window 52	1.0	60.75	6.75	9.00	3.50	3.00	0.00	0.00	0.908	0.000
Window 61	1.0	20.25	6.75	3.00	4.50	3.00	0.00	0.00	0.908	0.000
Window 62	1.0	122.43	8.30	14.75	1.00	0.00	0.00	0.00	0.908	0.000
Window 64	1.0	81.00	6.75	12.00	8.00	3.00	0.00	0.00	0.908	0.000
Window 65	1.0	81.00	6.75	12.00	31.00	3.00	0.00	0.00	0.908	0.000
Window 66	1.0	81.00	6.75	12.00	52.00	3.00	0.00	0.00	0.908	0.000
Window 67	1.0	81.00	6.75	12.00	69.00	3.00	0.00	0.00	0.908	0.000
Window 10	1.0	9.00	3.00	3.00	4.50	3.00	0.00	0.00	0.908	0.000
Window 77	1.0	60.75	6.75	9.00	5.00	3.00	0.00	0.00	0.908	0.000
Window 95	1.0	20.25	6.75	3.00	17.50	3.00	0.00	0.00	0.908	0.000
Window 96	1.0	40.50	6.75	6.00	0.50	3.00	0.00	0.00	0.908	0.000
Window 101	1.0	81.00	6.75	12.00	13.00	3.00	0.00	0.00	0.908	0.000
Window 85	1.0	81.00	6.75	12.00	18.00	3.00	0.00	0.00	0.908	0.000
Window 91	1.0	40.50	6.75	6.00	4.25	3.00	0.00	0.00	0.908	0.000
Window 14	1.0	20.25	6.75	3.00	2.70	2.75	0.00	0.00	0.908	0.000
Window 26	1.0	9.00	3.00	3.00	3.20	9.00	0.00	0.00	0.908	0.000
Window 30	1.0	9.00	3.00	3.00	3.20	2.50	0.00	0.00	0.908	0.000
Window 11	1.0	9.00	3.00	3.00	4.50	3.00	0.00	0.00	0.908	0.000
Window 8	1.0	25.00	5.00	5.00	1.00	10.00	0.00	0.00	0.908	0.000
Window 9	1.0	25.00	5.00	5.00	1.00	16.75	0.00	0.00	0.908	0.000
Window 36	1.0	81.00	6.75	12.00	14.50	3.00	0.00	0.00	0.908	0.000
Window 40	1.0	20.25	6.75	3.00	7.25	3.00	0.00	0.00	0.908	0.000
Window 46	1.0	20.25	6.75	3.00	35.50	3.00	0.00	0.00	0.908	0.000
Window 47	1.0	81.00	6.75	12.00	5.00	3.00	0.00	0.00	0.908	0.000
Window 56	1.0	20.25	6.75	3.00	23.50	3.00	0.00	0.00	0.908	0.000
Window 57	1.0	20.25	6.75	3.00	32.75	3.00	0.00	0.00	0.908	0.000
Window 63	1.0	40.50	6.75	6.00	1.50	3.00	0.00	0.00	0.908	0.000
Window 68	1.0	81.00	6.75	12.00	8.00	3.00	0.00	0.00	0.908	0.000
Window 75	1.0	40.50	6.75	6.00	31.00	3.00	0.00	0.00	0.908	0.000
Window 76	1.0	40.50	6.75	6.00	0.00	3.00	0.00	0.00	0.908	0.000
Window 19	1.0	25.00	5.00	5.00	4.00	16.75	0.00	0.00	0.908	0.000
Window 20	1.0	25.00	5.00	5.00	13.00	16.75	0.00	0.00	0.908	0.000
Window 21	1.0	25.00	5.00	5.00	22.00	16.75	0.00	0.00	0.908	0.000
Window 22	1.0	25.00	5.00	5.00	34.00	16.75	0.00	0.00	0.908	0.000
Window 23	1.0	25.00	5.00	5.00	43.00	16.75	0.00	0.00	0.908	0.000
Window 24	1.0	25.00	5.00	5.00	52.00	16.75	0.00	0.00	0.908	0.000
Window 2	1.0	25.00	5.00	5.00	24.25	10.00	0.00	0.00	0.908	0.000
Window 3	1.0	25.00	5.00	5.00	36.00	10.00	0.00	0.00	0.908	0.000
Window 5	1.0	25.00	5.00	5.00	14.25	16.75	0.00	0.00	0.908	0.000
Window 6	1.0	25.00	5.00	5.00	24.25	16.75	0.00	0.00	0.908	0.000
Window 7	1.0	25.00	5.00	5.00	36.00	16.75	0.00	0.00	0.908	0.000
Window 78	1.0	20.25	6.75	3.00	8.00	3.00	0.00	0.00	0.908	0.000
Window 84	1.0	20.25	6.75	3.00	1.00	3.00	0.00	0.00	0.908	0.000
Window 90	1.0	81.00	6.75	12.00	12.00	3.00	0.00	0.00	0.908	0.000
Window 105	1.0	40.50	6.75	6.00	6.00	3.00	0.00	0.00	0.908	0.000
Window 108	1.0	60.75	6.75	9.00	17.00	3.00	0.00	0.00	0.908	0.000

(Note: u-values include outside air film)

WINDOW NAME	MULTIPLIER	GLASS AREA (SQFT)	GLASS HEIGHT (FT)	GLASS WIDTH (FT)	LOCATION OF ORIGIN IN SURFACE COORDINATES X (FT)	Y (FT)	FRAME AREA (SQFT)	CURB AREA (SQFT)	FRAME U-VALUE (BTU/HR-SQFT-F)	CURB U-VALUE (BTU/HR-SQFT-F)
Window 94	1.0	20.25	6.75	3.00	24.00	3.00	0.00	0.00	0.908	0.000
Window 100	1.0	81.00	6.75	12.00	4.75	3.00	0.00	0.00	0.908	0.000
Window 15	1.0	20.25	6.75	3.00	2.70	2.75	0.00	0.00	0.908	0.000
Window 27	1.0	9.00	3.00	3.00	3.20	9.00	0.00	0.00	0.908	0.000
Window 31	1.0	9.00	3.00	3.00	3.20	2.50	0.00	0.00	0.908	0.000
Window 12	1.0	9.00	3.00	3.00	4.50	3.00	0.00	0.00	0.908	0.000
Window 79	1.0	20.25	6.75	3.00	8.00	3.00	0.00	0.00	0.908	0.000
Window 16	1.0	20.25	6.75	3.00	2.70	2.75	0.00	0.00	0.908	0.000
Window 37	1.0	81.00	6.75	12.00	14.50	3.00	0.00	0.00	0.908	0.000
Window 41	1.0	20.25	6.75	3.00	7.25	3.00	0.00	0.00	0.908	0.000
Window 44	1.0	20.25	6.75	3.00	6.00	3.00	0.00	0.00	0.908	0.000
Window 45	1.0	81.00	6.75	12.00	14.00	3.00	0.00	0.00	0.908	0.000
Window 55	1.0	20.25	6.75	3.00	4.50	3.00	0.00	0.00	0.908	0.000
Window 58	1.0	81.00	6.75	12.00	14.00	3.00	0.00	0.00	0.908	0.000
Window 69	1.0	81.00	6.75	12.00	3.50	3.00	0.00	0.00	0.908	0.000
Window 72	1.0	81.00	6.75	12.00	26.50	3.00	0.00	0.00	0.908	0.000
Window 83	1.0	81.00	6.75	12.00	12.00	3.00	0.00	0.00	0.908	0.000
Window 89	1.0	20.25	6.75	3.00	1.00	3.00	0.00	0.00	0.908	0.000
Window 104	1.0	40.50	6.75	6.00	5.50	3.00	0.00	0.00	0.908	0.000
Window 107	1.0	60.75	6.75	9.00	17.00	3.00	0.00	0.00	0.908	0.000
Window 93	1.0	81.00	6.75	12.00	4.75	3.00	0.00	0.00	0.908	0.000
Window 99	1.0	20.25	6.75	3.00	24.00	3.00	0.00	0.00	0.908	0.000
Window 28	1.0	9.00	3.00	3.00	3.20	9.00	0.00	0.00	0.908	0.000
Window 32	1.0	9.00	3.00	3.00	3.20	2.50	0.00	0.00	0.908	0.000
Window 13	1.0	9.00	3.00	3.00	4.50	3.00	0.00	0.00	0.908	0.000
Window 38	1.0	81.00	6.75	12.00	14.50	3.00	0.00	0.00	0.908	0.000
Window 42	1.0	20.25	6.75	3.00	7.25	3.00	0.00	0.00	0.908	0.000
Window 48	1.0	20.25	6.75	3.00	6.00	3.00	0.00	0.00	0.908	0.000
Window 50	1.0	81.00	6.75	12.00	14.00	3.00	0.00	0.00	0.908	0.000
Window 54	1.0	20.25	6.75	3.00	4.50	3.00	0.00	0.00	0.908	0.000
Window 59	1.0	81.00	6.75	12.00	14.00	3.00	0.00	0.00	0.908	0.000
Window 80	1.0	20.25	6.75	3.00	8.00	3.00	0.00	0.00	0.908	0.000
Window 17	1.0	20.25	6.75	3.00	2.70	2.75	0.00	0.00	0.908	0.000
Window 70	1.0	81.00	6.75	12.00	12.25	3.00	0.00	0.00	0.908	0.000
Window 73	1.0	81.00	6.75	12.00	35.25	3.00	0.00	0.00	0.908	0.000
Window 98	1.0	40.50	6.75	6.00	11.00	3.00	0.00	0.00	0.908	0.000
Window 103	1.0	40.50	6.75	6.00	1.50	3.00	0.00	0.00	0.908	0.000
Window 106	1.0	20.25	6.75	3.00	13.00	3.00	0.00	0.00	0.908	0.000
Window 88	1.0	40.50	6.75	6.00	4.00	3.00	0.00	0.00	0.908	0.000
Window 82	1.0	81.00	6.75	12.00	1.00	3.00	0.00	0.00	0.908	0.000
Window 29	1.0	9.00	3.00	3.00	3.20	9.00	0.00	0.00	0.908	0.000
Window 33	1.0	9.00	3.00	3.00	3.20	2.50	0.00	0.00	0.908	0.000
Window 39	1.0	81.00	6.75	12.00	14.50	3.00	0.00	0.00	0.908	0.000
Window 43	1.0	20.25	6.75	3.00	7.25	3.00	0.00	0.00	0.908	0.000
Window 49	1.0	20.25	6.75	3.00	6.00	3.00	0.00	0.00	0.908	0.000
Window 51	1.0	81.00	6.75	12.00	14.00	3.00	0.00	0.00	0.908	0.000
Window 53	1.0	20.25	6.75	3.00	4.50	3.00	0.00	0.00	0.908	0.000
Window 60	1.0	81.00	6.75	12.00	14.00	3.00	0.00	0.00	0.908	0.000
Window 81	1.0	20.25	6.75	3.00	8.00	3.00	0.00	0.00	0.908	0.000
Window 74	1.0	81.00	6.75	12.00	5.00	3.00	0.00	0.00	0.908	0.000
Window 71	1.0	81.00	6.75	12.00	14.25	3.00	0.00	0.00	0.908	0.000
Window 18	1.0	20.25	6.75	3.00	2.70	2.75	0.00	0.00	0.908	0.000

REPORT- LV-H Details of Windows WEATHER FILE- NEW YORK LAGUARDI NY
----------(CONTINUED)--------

(Note: u-values include outside air film)

WINDOW NAME	MULTIPLIER	GLASS AREA (SQFT)	GLASS HEIGHT (FT)	GLASS WIDTH (FT)	LOCATION OF ORIGIN IN SURFACE COORDINATES X (FT)	Y (FT)	FRAME AREA (SQFT)	CURB AREA (SQFT)	FRAME U-VALUE (BTU/HR-SQFT-F)	CURB U-VALUE (BTU/HR-SQFT-F)
Window 92	1.0	60.75	6.75	9.00	4.75	3.00	0.00	0.00	0.908	0.000
Window 97	1.0	40.50	6.75	6.00	23.50	3.00	0.00	0.00	0.908	0.000
Window 102	1.0	40.50	6.75	6.00	1.50	3.00	0.00	0.00	0.908	0.000
Window 86	1.0	81.00	6.75	12.00	20.50	3.00	0.00	0.00	0.908	0.000
Window 87	1.0	40.50	6.75	6.00	6.00	3.00	0.00	0.00	0.908	0.000

WINDOW NAME	SETBACK (FT)	GLASS SHADING COEFF	NUMBER OF PANES	CENTER-OF-GLASS U-VALUE (BTU/HR-SQFT-F)	GLASS VISIBLE TRANS	GLASS SOLAR TRANS	SURFACE TO ROUGH OPEN AREA RATIO
Window 25	0.00	0.46	1	0.418	0.440	0.878	1.000
Window 34	0.00	0.46	1	0.418	0.440	0.878	1.000
Window 35	0.00	0.46	1	0.418	0.440	0.878	1.000
Window 52	0.00	0.46	1	0.418	0.440	0.878	1.000
Window 61	0.00	0.46	1	0.418	0.440	0.878	1.000
Window 62	0.00	0.46	1	0.466	0.440	0.878	1.000
Window 64	0.00	0.46	1	0.418	0.440	0.878	1.000
Window 65	0.00	0.46	1	0.418	0.440	0.878	1.000
Window 66	0.00	0.46	1	0.418	0.440	0.878	1.000
Window 67	0.00	0.46	1	0.418	0.440	0.878	1.000
Window 10	0.00	0.46	1	0.418	0.440	0.878	1.000
Window 77	0.00	0.46	1	0.418	0.440	0.878	1.000
Window 95	0.00	0.46	1	0.418	0.440	0.878	1.000
Window 96	0.00	0.46	1	0.418	0.440	0.878	1.000
Window 101	0.00	0.46	1	0.418	0.440	0.878	1.000
Window 85	0.00	0.46	1	0.418	0.440	0.878	1.000
Window 91	0.00	0.46	1	0.418	0.440	0.878	1.000
Window 14	0.00	0.46	1	0.418	0.440	0.878	1.000
Window 26	0.00	0.46	1	0.418	0.440	0.878	1.000
Window 30	0.00	0.46	1	0.418	0.440	0.878	1.000
Window 11	0.00	0.46	1	0.418	0.440	0.878	1.000
Window 8	0.00	0.46	1	0.418	0.440	0.878	1.000
Window 9	0.00	0.46	1	0.418	0.440	0.878	1.000
Window 36	0.00	0.46	1	0.418	0.440	0.878	1.000
Window 40	0.00	0.46	1	0.418	0.440	0.878	1.000
Window 46	0.00	0.46	1	0.418	0.440	0.878	1.000
Window 47	0.00	0.46	1	0.418	0.440	0.878	1.000
Window 56	0.00	0.46	1	0.418	0.440	0.878	1.000
Window 57	0.00	0.46	1	0.418	0.440	0.878	1.000
Window 63	0.00	0.46	1	0.418	0.440	0.878	1.000
Window 68	0.00	0.46	1	0.418	0.440	0.878	1.000
Window 75	0.00	0.46	1	0.418	0.440	0.878	1.000
Window 76	0.00	0.46	1	0.418	0.440	0.878	1.000
Window 19	0.00	0.46	1	0.418	0.440	0.878	1.000
Window 20	0.00	0.46	1	0.418	0.440	0.878	1.000
Window 21	0.00	0.46	1	0.418	0.440	0.878	1.000
Window 22	0.00	0.46	1	0.418	0.440	0.878	1.000
Window 23	0.00	0.46	1	0.418	0.440	0.878	1.000
Window 24	0.00	0.46	1	0.418	0.440	0.878	1.000
Window 2	0.00	0.46	1	0.418	0.440	0.878	1.000
Window 3	0.00	0.46	1	0.418	0.440	0.878	1.000

WINDOW NAME	SETBACK (FT)	GLASS SHADING COEFF	NUMBER OF PANES	CENTER-OF-GLASS U-VALUE (BTU/HR-SQFT-F)	GLASS VISIBLE TRANS	GLASS SOLAR TRANS	SURFACE TO ROUGH OPEN AREA RATIO
Window 5	0.00	0.46	1	0.418	0.440	0.878	1.000
Window 6	0.00	0.46	1	0.418	0.440	0.878	1.000
Window 7	0.00	0.46	1	0.418	0.440	0.878	1.000
Window 78	0.00	0.46	1	0.418	0.440	0.878	1.000
Window 84	0.00	0.46	1	0.418	0.440	0.878	1.000
Window 90	0.00	0.46	1	0.418	0.440	0.878	1.000
Window 105	0.00	0.46	1	0.418	0.440	0.878	1.000
Window 108	0.00	0.46	1	0.418	0.440	0.878	1.000
Window 94	0.00	0.46	1	0.418	0.440	0.878	1.000
Window 100	0.00	0.46	1	0.418	0.440	0.878	1.000
Window 15	0.00	0.46	1	0.418	0.440	0.878	1.000
Window 27	0.00	0.46	1	0.418	0.440	0.878	1.000
Window 31	0.00	0.46	1	0.418	0.440	0.878	1.000
Window 12	0.00	0.46	1	0.418	0.440	0.878	1.000
Window 79	0.00	0.46	1	0.418	0.440	0.878	1.000
Window 16	0.00	0.46	1	0.418	0.440	0.878	1.000
Window 37	0.00	0.46	1	0.418	0.440	0.878	1.000
Window 41	0.00	0.46	1	0.418	0.440	0.878	1.000
Window 44	0.00	0.46	1	0.418	0.440	0.878	1.000
Window 45	0.00	0.46	1	0.418	0.440	0.878	1.000
Window 55	0.00	0.46	1	0.418	0.440	0.878	1.000
Window 58	0.00	0.46	1	0.418	0.440	0.878	1.000
Window 69	0.00	0.46	1	0.418	0.440	0.878	1.000
Window 72	0.00	0.46	1	0.418	0.440	0.878	1.000
Window 83	0.00	0.46	1	0.418	0.440	0.878	1.000
Window 89	0.00	0.46	1	0.418	0.440	0.878	1.000
Window 104	0.00	0.46	1	0.418	0.440	0.878	1.000
Window 107	0.00	0.46	1	0.418	0.440	0.878	1.000
Window 93	0.00	0.46	1	0.418	0.440	0.878	1.000
Window 99	0.00	0.46	1	0.418	0.440	0.878	1.000
Window 28	0.00	0.46	1	0.418	0.440	0.878	1.000
Window 32	0.00	0.46	1	0.418	0.440	0.878	1.000
Window 13	0.00	0.46	1	0.418	0.440	0.878	1.000
Window 38	0.00	0.46	1	0.418	0.440	0.878	1.000
Window 42	0.00	0.46	1	0.418	0.440	0.878	1.000
Window 48	0.00	0.46	1	0.418	0.440	0.878	1.000
Window 50	0.00	0.46	1	0.418	0.440	0.878	1.000
Window 54	0.00	0.46	1	0.418	0.440	0.878	1.000
Window 59	0.00	0.46	1	0.418	0.440	0.878	1.000
Window 80	0.00	0.46	1	0.418	0.440	0.878	1.000
Window 17	0.00	0.46	1	0.418	0.440	0.878	1.000
Window 70	0.00	0.46	1	0.418	0.440	0.878	1.000
Window 73	0.00	0.46	1	0.418	0.440	0.878	1.000
Window 98	0.00	0.46	1	0.418	0.440	0.878	1.000
Window 103	0.00	0.46	1	0.418	0.440	0.878	1.000
Window 106	0.00	0.46	1	0.418	0.440	0.878	1.000
Window 88	0.00	0.46	1	0.418	0.440	0.878	1.000
Window 82	0.00	0.46	1	0.418	0.440	0.878	1.000
Window 29	0.00	0.46	1	0.418	0.440	0.878	1.000
Window 33	0.00	0.46	1	0.418	0.440	0.878	1.000
Window 39	0.00	0.46	1	0.418	0.440	0.878	1.000
Window 43	0.00	0.46	1	0.418	0.440	0.878	1.000
Window 49	0.00	0.46	1	0.418	0.440	0.878	1.000
Window 51	0.00	0.46	1	0.418	0.440	0.878	1.000

REPORT- LV-H Details of Windows WEATHER FILE- NEW YORK LAGUARDI NY

(CONTINUED)

WINDOW NAME	SETBACK (FT)	GLASS SHADING COEFF	NUMBER OF PANES	CENTER-OF-GLASS U-VALUE (BTU/HR-SQFT-F)	GLASS VISIBLE TRANS	GLASS SOLAR TRANS	SURFACE TO ROUGH OPEN AREA RATIO
Window 53	0.00	0.46	1	0.418	0.440	0.878	1.000
Window 60	0.00	0.46	1	0.418	0.440	0.878	1.000
Window 81	0.00	0.46	1	0.418	0.440	0.878	1.000
Window 74	0.00	0.46	1	0.418	0.440	0.878	1.000
Window 71	0.00	0.46	1	0.418	0.440	0.878	1.000
Window 18	0.00	0.46	1	0.418	0.440	0.878	1.000
Window 92	0.00	0.46	1	0.418	0.440	0.878	1.000
Window 97	0.00	0.46	1	0.418	0.440	0.878	1.000
Window 102	0.00	0.46	1	0.418	0.440	0.878	1.000
Window 86	0.00	0.46	1	0.418	0.440	0.878	1.000
Window 87	0.00	0.46	1	0.418	0.440	0.878	1.000

NUMBER OF CONSTRUCTIONS 14 DELAYED 12 QUICK 2

CONSTRUCTION NAME	U-VALUE (BTU/HR-SQFT-F)	SURFACE ABSORPTANCE	SURFACE ROUGHNESS INDEX	SURFACE TYPE	NUMBER OF RESPONSE FACTORS
EW-TYP-GB-CON	0.104	0.70	3	DELAYED	29
EW-TYP-NOGB-CON	0.059	0.70	3	DELAYED	37
EXP-FL-INT-CON	0.075	0.70	3	DELAYED	13
UW-CON	0.024	0.70	3	DELAYED	16
IW-CON	0.518	0.70	3	DELAYED	6
RF-CON	0.032	0.70	3	DELAYED	6
SLOPED-RF-CON	0.032	0.70	3	DELAYED	6
SLAB-ON-GRADE	0.024	0.70	3	DELAYED	8
FL-INT-CON	1.020	0.70	3	DELAYED	4
CL-INT-CON	0.805	0.70	3	DELAYED	4
DR-CON	0.600	0.70	3	QUICK	0
LD-DR-CON	1.500	0.70	3	QUICK	0
Shear Wall	0.360	0.70	3	DELAYED	12
Gym RF	0.032	0.70	3	DELAYED	18

REPORT- SV-A System Design Parameters for HVAC System 1 WEATHER FILE- NEW YORK LAGUARDI NY

SYSTEM TYPE	ALTITUDE FACTOR	FLOOR AREA (SQFT)	MAX PEOPLE	OUTSIDE AIR RATIO	COOLING CAPACITY (KBTU/HR)	SENSIBLE (SHR)	HEATING CAPACITY (KBTU/HR)	COOLING EIR (BTU/BTU)	HEATING EIR (BTU/BTU)	HEAT PUMP SUPP-HEAT (KBTU/HR)
SUM	1.000	0.0	0.	0.000	0.000	0.000	0.000	0.000	0.000	0.000

ZONE NAME	SUPPLY FLOW (CFM)	EXHAUST FLOW (CFM)	FAN (KW)	MINIMUM FLOW (FRAC)	OUTSIDE AIR FLOW (CFM)	COOLING CAPACITY (KBTU/HR)	SENSIBLE (FRAC)	EXTRACTION RATE (KBTU/HR)	HEATING CAPACITY (KBTU/HR)	ADDITION RATE (KBTU/HR)	ZONE MULT
1st Floor Plenum-z	0.	0.	0.000	0.000	0.	0.00	0.00	0.00	0.00	0.00	1.
2nd Floor Plenum-z	0.	0.	0.000	0.000	0.	0.00	0.00	0.00	0.00	0.00	1.
3rd Floor Plenum-z	0.	0.	0.000	0.000	0.	0.00	0.00	0.00	0.00	0.00	1.
4th Floor Plenum-z	0.	0.	0.000	0.000	0.	0.00	0.00	0.00	0.00	0.00	1.
5th Floor Plenum-z	0.	0.	0.000	0.000	0.	0.00	0.00	0.00	0.00	0.00	1.

REPORT- SV-A System Design Parameters for AHU-1 CLASS-SYS AHU-1 WEATHER FILE- NEW YORK LAGUARDI NY

SYSTEM TYPE	ALTITUDE FACTOR	FLOOR AREA (SQFT)	MAX PEOPLE	OUTSIDE AIR RATIO	COOLING CAPACITY (KBTU/HR)	SENSIBLE (SHR)	HEATING CAPACITY (KBTU/HR)	COOLING EIR (BTU/BTU)	HEATING EIR (BTU/BTU)	HEAT PUMP SUPP-HEAT (KBTU/HR)
VAVS	1.000	16835.5	507.	0.328	816.000	0.692	-451.800	0.000	0.000	0.000

FAN TYPE	CAPACITY (CFM)	DIVERSITY FACTOR (FRAC)	POWER DEMAND (KW)	FAN DELTA-T (F)	STATIC PRESSURE (IN-WATER)	TOTAL EFF (FRAC)	MECH EFF (FRAC)	FAN PLACEMENT	FAN CONTROL	MAX FAN RATIO (FRAC)	MIN FAN RATIO (FRAC)
SUPPLY	19875.	1.00	19.277	3.00	0.0	0.00	0.00	DRAW-THRU	SPEED	1.10	0.30
RETURN	19875.	1.00	13.147	2.04	0.0	0.00	0.00	RETURN	SPEED	1.10	0.30

ZONE NAME	SUPPLY FLOW (CFM)	EXHAUST FLOW (CFM)	FAN (KW)	MINIMUM FLOW (FRAC)	OUTSIDE AIR FLOW (CFM)	COOLING CAPACITY (KBTU/HR)	SENSIBLE (FRAC)	EXTRACTION RATE (KBTU/HR)	HEATING CAPACITY (KBTU/HR)	ADDITION RATE (KBTU/HR)	ZONE MULT
CR 202-z	1378.	0.	0.000	0.300	423.	0.00	0.00	27.74	-26.78	-30.77	1.
CR 204-z	1366.	0.	0.000	0.300	432.	0.00	0.00	27.51	-26.56	-30.52	1.
CR 201-z	1104.	0.	0.000	0.300	440.	0.00	0.00	22.22	-21.46	-24.65	1.
CR 203-z	1078.	0.	0.000	0.300	428.	0.00	0.00	21.70	-20.95	-24.07	1.
RR 202 204-z	13.	0.	0.000	0.300	0.	0.00	0.00	0.41	-0.26	-0.48	1.
CORR-2-z	219.	0.	0.000	0.300	97.	0.00	0.00	5.12	-4.27	-6.73	1.
									-1.83	(BASEBOARDS)	
CR 302-z	1105.	0.	0.000	0.300	440.	0.00	0.00	22.24	-21.47	-24.67	1.
CR 304-z	1111.	0.	0.000	0.300	441.	0.00	0.00	22.37	-21.60	-24.82	1.
CR 301-z	1104.	0.	0.000	0.300	440.	0.00	0.00	22.22	-21.46	-24.65	1.
CR 303-z	1078.	0.	0.000	0.300	438.	0.00	0.00	21.70	-20.95	-24.07	1.
CR 402-z	1105.	0.	0.000	0.300	441.	0.00	0.00	22.24	-21.47	-24.67	1.
CR 404-z	1111.	0.	0.000	0.300	441.	0.00	0.00	22.37	-21.60	-24.82	1.
CR 406-z	1174.	0.	0.000	0.300	444.	0.00	0.00	23.64	-22.83	-26.23	1.
CORR-4-z	261.	0.	0.000	0.300	105.	0.00	0.00	6.09	-5.08	-8.79	1.
									-2.95	(BASEBOARDS)	
WORKRM 403-z	696.	0.	0.000	0.300	52.	0.00	0.00	14.01	-13.53	-15.55	1.
BREAK 401-z	810.	0.	0.000	0.300	142.	0.00	0.00	16.31	-15.75	-18.09	1.
CR 502-z	1105.	0.	0.000	0.300	441.	0.00	0.00	22.24	-21.47	-24.67	1.
CR 504-z	1111.	0.	0.000	0.300	441.	0.00	0.00	22.37	-21.60	-24.82	1.
CUSTODIAL 505-z	1189.	0.	0.000	0.300	178.	0.00	0.00	23.94	-23.11	-26.56	1.
RESOURCE 503-z	671.	0.	0.000	0.300	49.	0.00	0.00	13.51	-13.04	-14.98	1.
LIB 501-z	1086.	0.	0.000	0.300	211.	0.00	0.00	21.86	-21.11	-24.25	1.

REPORT- SV-A System Design Parameters for AHU-4 GYM-SYS WEATHER FILE- NEW YORK LAGUARDI NY

SYSTEM TYPE	ALTITUDE FACTOR	FLOOR AREA (SQFT)	MAX PEOPLE	OUTSIDE AIR RATIO	COOLING CAPACITY (KBTU/HR)	SENSIBLE (SHR)	HEATING CAPACITY (KBTU/HR)	COOLING EIR (BTU/BTU)	HEATING EIR (BTU/BTU)	HEAT PUMP SUPP-HEAT (KBTU/HR)
VAVS	1.000	4107.9	222.	0.266	454.000	0.645	-256.000	0.000	0.000	0.000

FAN TYPE	CAPACITY (CFM)	DIVERSITY FACTOR (FRAC)	POWER DEMAND (KW)	FAN DELTA-T (F)	STATIC PRESSURE (IN-WATER)	TOTAL EFF (FRAC)	MECH EFF (FRAC)	FAN PLACEMENT	FAN CONTROL	MAX FAN RATIO (FRAC)	MIN FAN RATIO (FRAC)
SUPPLY	10100.	1.00	8.787	2.69	0.0	0.00	0.00	DRAW-THRU	SPEED	1.10	0.30
RETURN	9000.	1.00	3.159	1.08	0.0	0.65	0.72	RETURN	SPEED	1.10	0.30

ZONE NAME	SUPPLY FLOW (CFM)	EXHAUST FLOW (CFM)	FAN (KW)	MINIMUM FLOW (FRAC)	OUTSIDE AIR FLOW (CFM)	COOLING CAPACITY (KBTU/HR)	SENSIBLE (FRAC)	EXTRACTION RATE (KBTU/HR)	HEATING CAPACITY (KBTU/HR)	ADDITION RATE (KBTU/HR)	ZONE MULT
OFF 216-z	221.	0.	0.000	0.300	14.	0.00	0.00	4.28	-4.18	-4.41	1.
GYM 216-z	8428.	0.	0.000	0.300	2290.	0.00	0.00	163.44	-159.29	-168.17	1.
STAGE 216-z	1430.	0.	0.000	0.300	367.	0.00	0.00	27.74	-27.03	-31.87	1.
									-3.33	(BASEBOARDS)	
STOR 212-z	21.	0.	0.000	0.300	16.	0.00	0.00	0.41	-0.40	-0.57	1.
									-0.15	(BASEBOARDS)	
UC-E 2-z	0.	0.	0.000	0.000	0.	0.00	0.00	0.00	0.00	0.00	1.

REPORT- SV-A System Design Parameters for AHU-3 K/C-SYS WEATHER FILE- NEW YORK LAGUARDI NY

SYSTEM TYPE	ALTITUDE FACTOR	FLOOR AREA (SQFT)	MAX PEOPLE	OUTSIDE AIR RATIO	COOLING CAPACITY (KBTU/HR)	SENSIBLE (SHR)	HEATING CAPACITY (KBTU/HR)	COOLING EIR (BTU/BTU)	HEATING EIR (BTU/BTU)	HEAT PUMP SUPP-HEAT (KBTU/HR)
VAVS	1.000	5159.2	143.	0.224	347.000	0.660	-186.500	0.000	0.000	0.000

FAN TYPE	CAPACITY (CFM)	DIVERSITY FACTOR (FRAC)	POWER DEMAND (KW)	FAN DELTA-T (F)	STATIC PRESSURE (IN-WATER)	TOTAL EFF (FRAC)	MECH EFF (FRAC)	FAN PLACEMENT	FAN CONTROL	MAX FAN RATIO (FRAC)	MIN FAN RATIO (FRAC)
SUPPLY	7565.	1.00	6.060	2.48	0.0	0.00	0.00	DRAW-THRU	SPEED	1.10	0.30
RETURN	7565.	1.00	3.177	1.30	0.0	0.00	0.00	RETURN	SPEED	1.10	0.30

ZONE NAME	SUPPLY FLOW (CFM)	EXHAUST FLOW (CFM)	FAN (KW)	MINIMUM FLOW (FRAC)	OUTSIDE AIR FLOW (CFM)	COOLING CAPACITY (KBTU/HR)	SENSIBLE (FRAC)	EXTRACTION RATE (KBTU/HR)	HEATING CAPACITY (KBTU/HR)	ADDITION RATE (KBTU/HR)	ZONE MULT
Caf 108-z	3741.	0.	0.000	0.300	1485.	0.00	0.00	79.37	0.00	-5.49	1.
									-27.96	(BASEBOARDS)	
RR 108-z	61.	0.	0.000	0.300	0.	0.00	0.00	1.94	0.00	-1.19	1.
									-1.30	(BASEBOARDS)	
CORR-BOH-z	155.	0.	0.000	0.300	0.	0.00	0.00	3.78	0.00	-3.24	1.
									-4.17	(BASEBOARDS)	
RR 115-z	25.	0.	0.000	0.300	0.	0.00	0.00	0.80	0.00	-0.67	1.
									-0.71	(BASEBOARDS)	
STOR 115-z	97.	0.	0.000	0.300	16.	0.00	0.00	2.06	0.00	-1.66	1.
									-1.83	(BASEBOARDS)	
KITCH 115-z	3441.	0.	0.000	0.300	188.	0.00	0.00	83.95	0.00	-0.96	1.
									-13.11	(BASEBOARDS)	
STOR 112-z	23.	0.	0.000	0.300	7.	0.00	0.00	0.48	0.00	-0.25	1.
									-0.29	(BASEBOARDS)	
LCKR 115-z	23.	0.	0.000	0.300	0.	0.00	0.00	0.48	0.00	-0.36	1.
									-0.49	(BASEBOARDS)	

REPORT- SV-A System Design Parameters for DATA-SYS WEATHER FILE- NEW YORK LAGUARDI NY

SYSTEM TYPE	ALTITUDE FACTOR	FLOOR AREA (SQFT)	MAX PEOPLE	OUTSIDE AIR RATIO	COOLING CAPACITY (KBTU/HR)	SENSIBLE (SHR)	HEATING CAPACITY (KBTU/HR)	COOLING EIR (BTU/BTU)	HEATING EIR (BTU/BTU)	HEAT PUMP SUPP-HEAT (KBTU/HR)
PTAC	1.000	728.6	1.	0.078	0.000	0.000	0.000	0.346	0.000	0.000

FAN TYPE	CAPACITY (CFM)	DIVERSITY FACTOR (FRAC)	POWER DEMAND (KW)	FAN DELTA-T (F)	STATIC PRESSURE (IN-WATER)	TOTAL EFF (FRAC)	MECH EFF (FRAC)	FAN PLACEMENT	FAN CONTROL	MAX FAN RATIO (FRAC)	MIN FAN RATIO (FRAC)
SUPPLY	559.	0.00	0.001	1.82	2.0	0.40	0.44	BLOW-THRU	2-SPEED	0.00	0.00

ZONE NAME	SUPPLY FLOW (CFM)	EXHAUST FLOW (CFM)	FAN (KW)	MINIMUM FLOW (FRAC)	OUTSIDE AIR FLOW (CFM)	COOLING CAPACITY (KBTU/HR)	SENSIBLE (FRAC)	EXTRACTION RATE (KBTU/HR)	HEATING CAPACITY (KBTU/HR)	ADDITION RATE (KBTU/HR)	ZONE MULT
IDF 209-z	85.	0.	0.050	1.000	6.	3.21	0.62	2.76	0.00	-0.18	1.
MDF 411-z	264.	0.	0.155	1.000	18.	9.93	0.62	8.56	0.00	-1.05	1.
ELEV-PH-z	210.	0.	0.123	1.000	19.	8.06	0.61	6.59	0.00	-7.48	1.

REPORT- SV-A System Design Parameters for HEAT-ONLY-SYS WEATHER FILE- NEW YORK LAGUARDI NY

SYSTEM TYPE	ALTITUDE FACTOR	FLOOR AREA (SQFT)	MAX PEOPLE	OUTSIDE AIR RATIO	COOLING CAPACITY (KBTU/HR)	SENSIBLE (SHR)	HEATING CAPACITY (KBTU/HR)	COOLING EIR (BTU/BTU)	HEATING EIR (BTU/BTU)	HEAT PUMP SUPP-HEAT (KBTU/HR)
UHT	1.000	8298.9	38.	0.000	0.000	0.000	0.000	0.000	0.000	0.000

FAN TYPE	CAPACITY (CFM)	DIVERSITY FACTOR (FRAC)	POWER DEMAND (KW)	FAN DELTA-T (F)	STATIC PRESSURE (IN-WATER)	TOTAL EFF (FRAC)	MECH EFF (FRAC)	FAN PLACEMENT	FAN CONTROL	MAX FAN RATIO (FRAC)	MIN FAN RATIO (FRAC)
SUPPLY	1324.	0.00	0.001	1.82	2.0	0.40	0.44	BLOW-THRU	CONSTANT	0.00	0.00

ZONE NAME	SUPPLY FLOW (CFM)	EXHAUST FLOW (CFM)	FAN (KW)	MINIMUM FLOW (FRAC)	OUTSIDE AIR FLOW (CFM)	COOLING CAPACITY (KBTU/HR)	SENSIBLE (FRAC)	EXTRACTION RATE (KBTU/HR)	HEATING CAPACITY (KBTU/HR)	ADDITION RATE (KBTU/HR)	ZONE MULT
CORR Cellar-z	76.	0.	0.045	1.000	0.	0.00	0.00	0.00	-6.09	-5.03	1.
STRS C-C-z	16.	0.	0.009	1.000	0.	0.00	0.00	0.00	-1.25	-1.03	1.
STRS B-C-z	20.	0.	0.012	1.000	0.	0.00	0.00	0.00	-1.59	-1.32	1.
WATER C01-z	51.	0.	0.030	1.000	0.	0.00	0.00	0.00	-4.07	-3.36	1.
ELEC C02-z	42.	0.	0.025	1.000	0.	0.00	0.00	0.00	-3.38	-2.79	1.
STRS A-1-z	86.	0.	0.051	1.000	0.	0.00	0.00	0.00	-6.88	-5.60	1.
STOR 103-z	17.	0.	0.010	1.000	0.	0.00	0.00	0.00	-1.34	-1.09	1.
STRS C-1-z	40.	0.	0.024	1.000	0.	0.00	0.00	0.00	-3.22	-2.62	1.
STRS B-1-z	28.	0.	0.016	1.000	0.	0.00	0.00	0.00	-2.22	-1.81	1.
STRS A-2-z	58.	0.	0.034	1.000	0.	0.00	0.00	0.00	-4.60	-3.74	1.
STRS B-2-z	27.	0.	0.016	1.000	0.	0.00	0.00	0.00	-2.18	-1.77	1.
STRS C-2-z	93.	0.	0.055	1.000	0.	0.00	0.00	0.00	-7.45	-6.06	1.
STRS A-3-z	58.	0.	0.034	1.000	0.	0.00	0.00	0.00	-4.60	-3.74	1.
STRS B-3-z	27.	0.	0.016	1.000	0.	0.00	0.00	0.00	-2.18	-1.77	1.
STRS A-4-z	58.	0.	0.034	1.000	0.	0.00	0.00	0.00	-4.60	-3.74	1.
STRS B-4-z	56.	0.	0.033	1.000	0.	0.00	0.00	0.00	-4.44	-3.61	1.
STRS C-4-z	94.	0.	0.055	1.000	0.	0.00	0.00	0.00	-7.48	-6.08	1.
STRS A-5-z	71.	0.	0.041	1.000	0.	0.00	0.00	0.00	-5.63	-4.57	1.
STRS B-5-z	75.	0.	0.044	1.000	0.	0.00	0.00	0.00	-6.01	-4.89	1.
MECH-z	221.	0.	0.129	1.000	0.	0.00	0.00	0.00	-13.64	-11.43	1.
STOR-PH-z	48.	0.	0.028	1.000	0.	0.00	0.00	0.00	-3.81	-3.09	1.
STRS A-PH-z	61.	0.	0.036	1.000	0.	0.00	0.00	0.00	-4.90	-3.98	1.

REPORT- SV-A System Design Parameters for AHU-2 CLASS SYS WEATHER FILE- NEW YORK LAGUARDI NY

SYSTEM TYPE	ALTITUDE FACTOR	FLOOR AREA (SQFT)	MAX PEOPLE	OUTSIDE AIR RATIO	COOLING CAPACITY (KBTU/HR)	SENSIBLE (SHR)	HEATING CAPACITY (KBTU/HR)	COOLING EIR (BTU/BTU)	HEATING EIR (BTU/BTU)	HEAT PUMP SUPP-HEAT (KBTU/HR)
VAVS	1.000	24742.9	489.	0.303	787.000	0.706	-289.000	0.000	0.000	0.000

FAN TYPE	CAPACITY (CFM)	DIVERSITY FACTOR (FRAC)	POWER DEMAND (KW)	FAN DELTA-T (F)	STATIC PRESSURE (IN-WATER)	TOTAL EFF (FRAC)	MECH EFF (FRAC)	FAN PLACEMENT	FAN CONTROL	MAX FAN RATIO (FRAC)	MIN FAN RATIO (FRAC)
SUPPLY	22352.	1.00	21.851	3.02	0.0	0.00	0.00	DRAW-THRU	SPEED	1.10	0.30
RETURN	22352.	1.00	14.663	2.03	0.0	0.65	0.72	RETURN	SPEED	1.10	0.30

ZONE NAME	SUPPLY FLOW (CFM)	EXHAUST FLOW (CFM)	FAN (KW)	MINIMUM FLOW (FRAC)	OUTSIDE AIR FLOW (CFM)	COOLING CAPACITY (KBTU/HR)	SENSIBLE (FRAC)	EXTRACTION RATE (KBTU/HR)	HEATING CAPACITY (KBTU/HR)	ADDITION RATE (KBTU/HR)	ZONE MULT
CR 102-z	1269.	0.	0.000	0.300	474.	0.00	0.00	21.39	0.00	4.41	1.
									-16.80	(BASEBOARDS)	
OFF 104-z	595.	0.	0.000	0.300	35.	0.00	0.00	10.03	0.00	2.23	1.
									-7.71	(BASEBOARDS)	
OFF 106-z	751.	0.	0.000	0.300	55.	0.00	0.00	12.67	0.00	3.60	1.
									-8.96	(BASEBOARDS)	
V-1-z	317.	0.	0.000	0.300	3.	0.00	0.00	5.35	0.00	-0.68	1.
									-5.99	(BASEBOARDS)	
MTNG 109-z	529.	0.	0.000	0.300	32.	0.00	0.00	8.92	0.00	1.49	1.
									-7.35	(BASEBOARDS)	
Nurse 107-z	719.	0.	0.000	0.300	41.	0.00	0.00	12.13	0.00	3.03	1.
									-8.99	(BASEBOARDS)	
CR 105-z	1219.	0.	0.000	0.300	415.	0.00	0.00	20.55	0.00	3.96	1.
									-16.41	(BASEBOARDS)	
RRs 101,3,5-z	33.	0.	0.000	0.300	0.	0.00	0.00	0.90	0.00	-1.03	1.
									-1.14	(BASEBOARDS)	
CR 101-z	1299.	0.	0.000	0.300	463.	0.00	0.00	21.91	0.00	2.80	1.
									-18.91	(BASEBOARDS)	
CORR-CR-z	72.	0.	0.000	0.300	38.	0.00	0.00	1.21	0.00	-0.90	1.
									-2.10	(BASEBOARDS)	
RR 102,4-z	15.	0.	0.000	0.300	0.	0.00	0.00	0.42	0.00	-0.32	1.
									-0.38	(BASEBOARDS)	
JC 113-z	10.	0.	0.000	0.300	0.	0.00	0.00	0.16	0.00	-0.05	1.
									-0.21	(BASEBOARDS)	
STOR 111-z	13.	0.	0.000	0.300	13.	0.00	0.00	0.21	0.00	-0.27	1.
									-0.31	(BASEBOARDS)	
LOBBY-z	70.	0.	0.000	0.300	70.	0.00	0.00	1.18	0.00	-0.88	1.
									-2.05	(BASEBOARDS)	
CORR Elev-z	112.	0.	0.000	0.300	41.	0.00	0.00	2.24	0.00	-1.54	1.
									-3.41	(BASEBOARDS)	
CR 206-z	550.	0.	0.000	0.300	222.	0.00	0.00	9.27	0.00	2.03	1.
									-7.15	(BASEBOARDS)	
CR 210-z	1429.	0.	0.000	0.300	406.	0.00	0.00	24.09	0.00	5.35	1.
									-18.53	(BASEBOARDS)	
RR JC 2-z	105.	0.	0.000	0.300	0.	0.00	0.00	2.89	0.00	-2.39	1.
									-2.74	(BASEBOARDS)	
CR 205-z	1150.	0.	0.000	0.300	440.	0.00	0.00	19.39	0.00	4.30	1.
									-14.92	(BASEBOARDS)	
STOR 207-z	39.	0.	0.000	0.300	19.	0.00	0.00	0.66	0.00	-0.88	1.
									-1.01	(BASEBOARDS)	
RR 211-z	10.	0.	0.000	0.300	0.	0.00	0.00	0.26	0.00	-0.11	1.

										-0.14	(BASEBOARDS)	
RR 208-210-z	18.	0.	0.000	0.300	0.	0.00	0.00	0.49	0.00	-0.28	1.	
										-0.34	(BASEBOARDS)	
RR JC 3-z	105.	0.	0.000	0.300	0.	0.00	0.00	2.89	0.00	-2.39	1.	
										-2.74	(BASEBOARDS)	
RR 309-z	10.	0.	0.000	0.300	0.	0.00	0.00	0.26	0.00	-0.11	1.	
										-0.14	(BASEBOARDS)	
CORR-3-z	236.	0.	0.000	0.300	85.	0.00	0.00	4.72	0.00	-2.58	1.	
										-6.52	(BASEBOARDS)	
CR 306-z	1209.	0.	0.000	0.300	441.	0.00	0.00	20.39	0.00	4.73	1.	
										-15.48	(BASEBOARDS)	
EXERCISE 310-z	1215.	0.	0.000	0.300	511.	0.00	0.00	20.48	0.00	1.00	1.	
										-19.30	(BASEBOARDS)	
OFF 308-z	220.	0.	0.000	0.300	14.	0.00	0.00	3.70	0.00	1.51	1.	
										-2.16	(BASEBOARDS)	
CR 305-z	1150.	0.	0.000	0.300	441.	0.00	0.00	19.39	0.00	4.30	1.	
										-14.92	(BASEBOARDS)	
STOR 307-z	52.	0.	0.000	0.300	34.	0.00	0.00	0.87	0.00	-1.07	1.	
										-1.24	(BASEBOARDS)	
RR JC 4-z	105.	0.	0.000	0.300	0.	0.00	0.00	2.89	0.00	-2.39	1.	
										-2.74	(BASEBOARDS)	
RR 413-z	10.	0.	0.000	0.300	0.	0.00	0.00	0.26	0.00	-0.11	1.	
										-0.14	(BASEBOARDS)	
PROJECT 408-z	2209.	0.	0.000	0.300	724.	0.00	0.00	37.24	0.00	8.85	1.	
										-28.06	(BASEBOARDS)	
STOR 410-z	27.	0.	0.000	0.300	16.	0.00	0.00	0.45	0.00	-0.61	1.	
										-0.70	(BASEBOARDS)	
STOR 409-z	61.	0.	0.000	0.300	35.	0.00	0.00	1.04	0.00	-1.33	1.	
										-1.54	(BASEBOARDS)	
OFF 407-z	876.	0.	0.000	0.300	75.	0.00	0.00	14.77	0.00	4.10	1.	
										-10.54	(BASEBOARDS)	
CR 405-z	736.	0.	0.000	0.300	264.	0.00	0.00	12.41	0.00	2.79	1.	
										-9.51	(BASEBOARDS)	
CR 506-z	1209.	0.	0.000	0.300	441.	0.00	0.00	20.39	0.00	4.73	1.	
										-15.48	(BASEBOARDS)	
RR JC 5-z	105.	0.	0.000	0.300	0.	0.00	0.00	2.89	0.00	-2.39	1.	
										-2.74	(BASEBOARDS)	
RR 511-z	10.	0.	0.000	0.300	0.	0.00	0.00	0.26	0.00	-0.11	1.	
										-0.14	(BASEBOARDS)	
STOR 509-z	52.	0.	0.000	0.300	34.	0.00	0.00	0.87	0.00	-1.07	1.	
										-1.24	(BASEBOARDS)	

REPORT- SV-A System Design Parameters for AHU-2 CLASS SYS WEATHER FILE- NEW YORK LAGUARDI NY

(CONTINUED)

CR 510-z	898.	0.	0.000	0.300	294.	0.00	0.00	15.13	0.00	2.43	1.	
									-12.57	(BASEBOARDS)		
CR 508-z	1261.	0.	0.000	0.300	507.	0.00	0.00	21.26	0.00	5.12	1.	
									-15.96	(BASEBOARDS)		
CORR-5-z	245.	0.	0.000	0.300	101.	0.00	0.00	4.91	0.00	-3.05	1.	
									-7.15	(BASEBOARDS)		
LOCKR 507-z	27.	0.	0.000	0.300	0.	0.00	0.00	0.46	0.00	-0.16	1.	
									-0.61	(BASEBOARDS)		
ELEV-1-z	0.	0.	0.000	0.000	0.	0.00	0.00	0.00	0.00	0.00	1.	
ELEV-2-z	0.	0.	0.000	0.000	0.	0.00	0.00	0.00	0.00	0.00	1.	
UC-N 2-z	0.	0.	0.000	0.000	0.	0.00	0.00	0.00	0.00	0.00	1.	
ELEV-3-z	0.	0.	0.000	0.000	0.	0.00	0.00	0.00	0.00	0.00	1.	
UC-N 3-z	0.	0.	0.000	0.000	0.	0.00	0.00	0.00	0.00	0.00	1.	
UC-E 3-z	0.	0.	0.000	0.000	0.	0.00	0.00	0.00	0.00	0.00	1.	
ELEV-4-z	0.	0.	0.000	0.000	0.	0.00	0.00	0.00	0.00	0.00	1.	
UC-N 4-z	0.	0.	0.000	0.000	0.	0.00	0.00	0.00	0.00	0.00	1.	
UC-E 4-z	0.	0.	0.000	0.000	0.	0.00	0.00	0.00	0.00	0.00	1.	
ELEV-5-z	0.	0.	0.000	0.000	0.	0.00	0.00	0.00	0.00	0.00	1.	
UC-N 5-z	0.	0.	0.000	0.000	0.	0.00	0.00	0.00	0.00	0.00	1.	
UC-E 5-z	0.	0.	0.000	0.000	0.	0.00	0.00	0.00	0.00	0.00	1.	

*** CIRCULATION LOOPS ***

	HEATING CAPACITY (MBTU/HR)	COOLING CAPACITY (MBTU/HR)	LOOP FLOW (GAL/MIN)	TOTAL HEAD (FT)	SUPPLY UA PRODUCT (BTU/HR-F)	SUPPLY LOSS DT (F)	RETURN UA PRODUCT (BTU/HR-F)	RETURN LOSS DT (F)	LOOP VOLUME (GAL)	FLUID HEAT CAPACITY (BTU/LB-F)
CHW-LOOP	0.000	2.425	400.3	51.6	0.0	0.00	0.0	0.00	600.5	1.00
PLANT-HW-LOOP-PRIM	-2.231	0.000	89.4	36.6	0.0	0.00	0.0	0.00	134.1	1.00
DW-LOOP	-0.073	0.000	1.9	6.4	0.0	0.00	0.0	0.00	2.9	1.00

*** PUMPS ***

	ATTACHED TO	FLOW (GAL/MIN)	HEAD (FT)	HEAD SETPOINT (FT)	CAPACITY CONTROL	POWER (KW)	MECHANICAL EFFICIENCY (FRAC)	MOTOR EFFICIENCY (FRAC)
HW-PUMP-PRIM	2 PUMP(s)							
PLANT-HW-LOOP-PRIM	PRIMARY LOOP	262.8	60.0	32.6	VFD&STAGED	4.460	0.770	0.865
CHW-PUMP	1 PUMP(s)							
CHW-LOOP	PRIMARY LOOP	400.3	61.9	37.6	VAR-SPEED	6.739	0.770	0.900
DHW-REPUMPS	1 PUMP(s)							
DW-LOOP	PRIMARY LOOP	25.0	28.0	0.0	VAR-SPEED	0.278	0.625	0.760

*** PRIMARY EQUIPMENT ***

EQUIPMENT TYPE	ATTACHED TO	RATED CAPACITY (MBTU/HR)	FLOW (GAL/MIN)	RATED EIR (FRAC)	RATED HIR (FRAC)	AUXILIARY (KW)
BLR-1						
HW-BOILER	PLANT-HW-LOOP-PRIM	-1.800	72.2	0.000	1.250	0.000
BLR-2						
HW-BOILER	PLANT-HW-LOOP-PRIM	-1.800	72.2	0.000	1.250	0.000
Chiller1						
ELEC-SCREW	CHW-LOOP	2.592	444.7	0.338	0.000	0.000

*** DW-HEATERS ***

EQUIPMENT TYPE	ATTACHED TO	CAPACITY (MBTU/HR)	FLOW (GAL/MIN)	EIR (FRAC)	HIR (FRAC)	AUXILIARY (KW)	TANK (GAL)	TANK UA (BTU/HR-F)
DHW-1								
GAS DW-HEATER	DW-LOOP	-0.102	2.7	0.000	1.220	0.000	120.0	6.18

Proposed Case eQuest Summary Reports:

BEPS

BEPU

ES-D

PS-E

LV-B

LV-D

LV-H

LV-I

SV-A

PV-A

REPORT- BEPS Building Energy Performance WEATHER FILE- NEW YORK LAGUARDI NY

	LIGHTS	TASK LIGHTS	MISC EQUIP	SPACE HEATING	SPACE COOLING	HEAT REJECT	PUMPS & AUX	VENT FANS	REFRIG DISPLAY	HT PUMP SUPPLEM	DOMEST HOT WTR	EXT USAGE	TOTAL
NONR ELECTRICITY													
MBTU	0.0	0.0	427.4	0.0	0.0	0.0	0.0	0.0	0.0	0.0	0.0	0.0	427.4
EM1 ELECTRICITY													
MBTU	159.5	0.0	0.0	3.5	159.9	0.0	31.1	152.8	0.0	0.0	0.0	3.1	509.9
ELEV ELECTRICITY													
MBTU	0.0	0.0	21.3	0.0	0.0	0.0	0.0	0.0	0.0	0.0	0.0	0.0	21.3
FUEL NATURAL-GAS													
MBTU	0.0	0.0	0.0	0.0	0.0	0.0	0.0	0.0	0.0	0.0	0.0	0.0	0.0
NONR NATURAL-GAS													
MBTU	0.0	0.0	38.5	0.0	0.0	0.0	0.0	0.0	0.0	0.0	0.0	0.0	38.5
DHW- NATURAL-GAS													
MBTU	0.0	0.0	0.0	0.0	0.0	0.0	0.0	0.0	0.0	0.0	235.5	0.0	235.5
FM1 NATURAL-GAS													
MBTU	0.0	0.0	0.0	354.8	0.0	0.0	0.0	0.0	0.0	0.0	0.0	0.0	354.8
MBTU	159.5	0.0	487.1	358.3	159.9	0.0	31.1	152.8	0.0	0.0	235.5	3.1	1587.4

TOTAL SITE ENERGY 1587.41 MBTU 27.4 KBTU/SQFT-YR GROSS-AREA 27.4 KBTU/SQFT-YR NET-AREA
TOTAL SOURCE ENERGY 3570.73 MBTU 61.6 KBTU/SQFT-YR GROSS-AREA 61.6 KBTU/SQFT-YR NET-AREA

PERCENT OF HOURS ANY SYSTEM ZONE OUTSIDE OF THROTTLING RANGE = 1.76
PERCENT OF HOURS ANY PLANT LOAD NOT SATISFIED = 0.00
HOURS ANY ZONE ABOVE COOLING THROTTLING RANGE = 73
HOURS ANY ZONE BELOW HEATING THROTTLING RANGE = 81

NOTE: ENERGY IS APPORTIONED HOURLY TO ALL END-USE CATEGORIES.

REPORT- BEPU Building Utility Performance WEATHER FILE- NEW YORK LAGUARDI NY

	LIGHTS	TASK LIGHTS	MISC EQUIP	SPACE HEATING	SPACE COOLING	HEAT REJECT	PUMPS & AUX	VENT FANS	REFRIG DISPLAY	HT PUMP SUPPLEM	DOMEST HOT WTR	EXT USAGE	TOTAL
NONR ELECTRICITY													
KWH	0.	0.	125227.	0.	0.	0.	0.	0.	0.	0.	0.	0.	125227.
EM1 ELECTRICITY													
KWH	46739.	0.	0.	1017.	46851.	0.	9117.	44777.	0.	0.	0.	898.	149400.
ELEV ELECTRICITY													
KWH	0.	0.	6234.	0.	0.	0.	0.	0.	0.	0.	0.	0.	6234.
FUEL NATURAL-GAS													
THERM	0.	0.	0.	0.	0.	0.	0.	0.	0.	0.	0.	0.	0.
NONR NATURAL-GAS													
THERM	0.	0.	385.	0.	0.	0.	0.	0.	0.	0.	0.	0.	385.
DHW- NATURAL-GAS													
THERM	0.	0.	0.	0.	0.	0.	0.	0.	0.	0.	2355.	0.	2355.
FM1 NATURAL-GAS													
THERM	0.	0.	0.	3548.	0.	0.	0.	0.	0.	0.	0.	0.	3548.

TOTAL ELECTRICITY 280860. KWH 4.843 KWH /SQFT-YR GROSS-AREA 4.843 KWH /SQFT-YR NET-AREA
TOTAL NATURAL-GAS 6288. THERM 0.108 THERM /SQFT-YR GROSS-AREA 0.108 THERM /SQFT-YR NET-AREA

PERCENT OF HOURS ANY SYSTEM ZONE OUTSIDE OF THROTTLING RANGE = 1.76
PERCENT OF HOURS ANY PLANT LOAD NOT SATISFIED = 0.00
HOURS ANY ZONE ABOVE COOLING THROTTLING RANGE = 73
HOURS ANY ZONE BELOW HEATING THROTTLING RANGE = 81

NOTE: ENERGY IS APPORTIONED HOURLY TO ALL END-USE CATEGORIES.

REPORT- ES-D Energy Cost Summary WEATHER FILE- NEW YORK LAGUARDI NY

UTILITY-RATE	RESOURCE	METERS	METERED ENERGY UNITS/YR	TOTAL CHARGE ($)	VIRTUAL RATE ($/UNIT)	RATE USED ALL YEAR?
REG-ELEC-TARIFF	ELECTRICITY	EM1 ELEV	155633. KWH	48968.	0.3146	YES
UNREG-ELEC-TARIFF	ELECTRICITY	NONR	125227. KWH	26101.	0.2084	YES
REG-GAS-TARIFF	NATURAL-GAS	FM1 FUEL DHW-	5904. THERM	6563.	1.1117	YES
UNREG-GAS-TARIFF	NATURAL-GAS	NONR	385. THERM	428.	1.1117	YES
				========== 82059.		

ENERGY COST/GROSS BLDG AREA: 1.42
ENERGY COST/NET BLDG AREA: 1.42

REPORT- PS-E Energy End-Use Summary for all Electric Meters WEATHER FILE- NEW YORK LAGUARDI NY

	LIGHTS	TASK LIGHTS	MISC EQUIP	SPACE HEATING	SPACE COOLING	HEAT REJECT	PUMPS & AUX	VENT FANS	REFRIG DISPLAY	HT PUMP SUPPLEM	DOMEST HOT WTR	EXT USAGE	TOTAL
JAN													
KWH	4159.	0.	12490.	226.	243.	0.	804.	5816.	0.	0.	0.	84.	23822.
MAX KW	20.233	0.000	47.706	0.744	0.722	0.000	1.817	32.536	0.000	0.000	0.000	0.205	100.268
DAY/HR	2/10	0/ 0	3/13	22/ 8	16/17	0/ 0	22/ 9	2/ 9	0/ 0	0/ 0	0/ 0	1/ 1	3/10
PEAK ENDUSE	20.233	0.000	45.561	0.589	0.631	0.000	1.411	31.842	0.000	0.000	0.000	0.000	
PEAK PCT	20.2	0.0	45.4	0.6	0.6	0.0	1.4	31.8	0.0	0.0	0.0	0.0	
FEB													
KWH	3763.	0.	11320.	213.	207.	0.	736.	5185.	0.	0.	0.	70.	21494.
MAX KW	20.233	0.000	47.706	0.751	0.704	0.000	1.863	31.531	0.000	0.000	0.000	0.205	99.793
DAY/HR	1/10	0/ 0	1/13	12/ 8	28/17	0/ 0	6/ 9	20/11	0/ 0	0/ 0	0/ 0	1/ 1	20/10
PEAK ENDUSE	20.233	0.000	45.561	0.658	0.617	0.000	1.364	31.360	0.000	0.000	0.000	0.000	
PEAK PCT	20.3	0.0	45.7	0.7	0.6	0.0	1.4	31.4	0.0	0.0	0.0	0.0	
MAR													
KWH	4337.	0.	12873.	143.	344.	0.	792.	4403.	0.	0.	0.	76.	22969.
MAX KW	20.233	0.000	47.706	0.696	9.817	0.000	2.914	30.653	0.000	0.000	0.000	0.205	99.960
DAY/HR	1/10	0/ 0	1/13	5/ 8	13/16	0/ 0	13/16	6/10	0/ 0	0/ 0	0/ 0	1/ 1	5/13
PEAK ENDUSE	19.715	0.000	47.706	0.599	0.649	0.000	1.374	29.917	0.000	0.000	0.000	0.000	
PEAK PCT	19.7	0.0	47.7	0.6	0.6	0.0	1.4	29.9	0.0	0.0	0.0	0.0	
APR													
KWH	3308.	0.	10740.	82.	1307.	0.	839.	2831.	0.	0.	0.	74.	19180.
MAX KW	20.233	0.000	47.706	0.493	47.207	0.000	4.539	29.705	0.000	0.000	0.000	0.205	136.934
DAY/HR	2/10	0/ 0	2/13	13/15	27/14	0/ 0	27/16	27/17	0/ 0	0/ 0	0/ 0	1/ 2	27/17
PEAK ENDUSE	14.632	0.000	41.663	0.196	46.483	0.000	4.255	29.705	0.000	0.000	0.000	0.000	
PEAK PCT	10.7	0.0	30.4	0.1	33.9	0.0	3.1	21.7	0.0	0.0	0.0	0.0	
MAY													
KWH	4337.	0.	12873.	39.	5049.	0.	965.	3455.	0.	0.	0.	71.	26789.
MAX KW	20.233	0.000	47.706	0.408	71.091	0.000	3.766	25.469	0.000	0.000	0.000	0.205	155.769
DAY/HR	1/10	0/ 0	1/13	4/17	23/14	0/ 0	23/14	4/17	0/ 0	0/ 0	0/ 0	1/ 2	23/14
PEAK ENDUSE	19.715	0.000	40.939	0.000	71.091	0.000	3.766	20.258	0.000	0.000	0.000	0.000	
PEAK PCT	12.7	0.0	26.3	0.0	45.6	0.0	2.4	13.0	0.0	0.0	0.0	0.0	
JUN													
KWH	4146.	0.	12064.	0.	8136.	0.	695.	3386.	0.	0.	0.	63.	28490.
MAX KW	20.233	0.000	47.706	0.000	100.254	0.000	4.120	30.160	0.000	0.000	0.000	0.205	189.396
DAY/HR	1/10	0/ 0	1/13	0/ 0	18/15	0/ 0	18/10	18/11	0/ 0	0/ 0	0/ 0	1/ 2	18/14
PEAK ENDUSE	19.715	0.000	39.939	0.000	97.414	0.000	3.848	28.480	0.000	0.000	0.000	0.000	
PEAK PCT	10.4	0.0	21.1	0.0	51.4	0.0	2.0	15.0	0.0	0.0	0.0	0.0	
JUL													
KWH	3567.	0.	6134.	0.	11594.	0.	777.	3438.	0.	0.	0.	68.	25579.
MAX KW	18.501	0.000	17.922	0.000	99.973	0.000	4.325	27.381	0.000	0.000	0.000	0.205	157.311
DAY/HR	2/10	0/ 0	2/13	0/ 0	9/14	0/ 0	9/10	2/10	0/ 0	0/ 0	0/ 0	1/ 2	9/14
PEAK ENDUSE	17.982	0.000	14.793	0.000	99.973	0.000	3.840	20.723	0.000	0.000	0.000	0.000	
PEAK PCT	11.4	0.0	9.4	0.0	63.6	0.0	2.4	13.2	0.0	0.0	0.0	0.0	
AUG													
KWH	3867.	0.	6232.	0.	9373.	0.	759.	3227.	0.	0.	0.	75.	23533.
MAX KW	18.501	0.000	17.922	0.000	70.734	0.000	4.024	23.986	0.000	0.000	0.000	0.205	127.552
DAY/HR	1/10	0/ 0	1/13	0/ 0	24/14	0/ 0	28/10	6/10	0/ 0	0/ 0	0/ 0	1/ 2	6/13
PEAK ENDUSE	17.982	0.000	17.922	0.000	66.619	0.000	3.747	21.283	0.000	0.000	0.000	0.000	
PEAK PCT	14.1	0.0	14.1	0.0	52.2	0.0	2.9	16.7	0.0	0.0	0.0	0.0	

REPORT- PS-E Energy End-Use Summary for all Electric Meters WEATHER FILE- NEW YORK LAGUARDI NY
(CONTINUED)

SEP													
KWH	3790.	0.	11461.	0.	6936.	0.	603.	2887.	0.	0.	0.	74.	25750.
MAX KW	20.233	0.000	47.706	0.000	91.362	0.000	4.209	29.259	0.000	0.000	0.000	0.205	188.237
DAY/HR	4/10	0/ 0	21/13	0/ 0	10/10	0/ 0	10/ 9	10/13	0/ 0	0/ 0	0/ 0	1/ 2	10/10
PEAK ENDUSE	20.233	0.000	44.061	0.000	91.362	0.000	4.208	28.373	0.000	0.000	0.000	0.000	
PEAK PCT	10.7	0.0	23.4	0.0	48.5	0.0	2.2	15.1	0.0	0.0	0.0	0.0	
OCT													
KWH	4337.	0.	12873.	30.	2467.	0.	649.	2669.	0.	0.	0.	76.	23102.
MAX KW	20.233	0.000	47.706	0.553	40.987	0.000	3.829	26.711	0.000	0.000	0.000	0.205	117.730
DAY/HR	1/10	0/ 0	1/13	1/ 8	24/17	0/ 0	3/17	29/ 9	0/ 0	0/ 0	0/ 0	1/ 2	24/17
PEAK ENDUSE	14.632	0.000	41.663	0.151	40.987	0.000	3.124	17.173	0.000	0.000	0.000	0.000	
PEAK PCT	12.4	0.0	35.4	0.1	34.8	0.0	2.7	14.6	0.0	0.0	0.0	0.0	
NOV													
KWH	3968.	0.	12001.	90.	976.	0.	728.	3420.	0.	0.	0.	79.	21262.
MAX KW	20.233	0.000	47.706	0.693	16.029	0.000	3.236	29.358	0.000	0.000	0.000	0.205	100.815
DAY/HR	1/10	0/ 0	1/13	26/ 8	1/17	0/ 0	13/ 9	27/17	0/ 0	0/ 0	0/ 0	1/ 2	28/10
PEAK ENDUSE	20.233	0.000	45.561	0.318	8.641	0.000	3.210	22.851	0.000	0.000	0.000	0.000	
PEAK PCT	20.1	0.0	45.2	0.3	8.6	0.0	3.2	22.7	0.0	0.0	0.0	0.0	
DEC													
KWH	3161.	0.	10400.	194.	218.	0.	769.	4061.	0.	0.	0.	88.	18890.
MAX KW	20.233	0.000	47.706	0.717	0.717	0.000	1.693	29.783	0.000	0.000	0.000	0.205	99.002
DAY/HR	3/10	0/ 0	3/13	3/ 9	11/15	0/ 0	3/ 9	19/17	0/ 0	0/ 0	0/ 0	1/ 1	6/13
PEAK ENDUSE	19.715	0.000	47.706	0.664	0.610	0.000	1.578	28.729	0.000	0.000	0.000	0.000	
PEAK PCT	19.9	0.0	48.2	0.7	0.6	0.0	1.6	29.0	0.0	0.0	0.0	0.0	
	=======	=======	=======	=======	=======	=======	=======	=======	=======	=======	=======	=======	========
KWH	46739.	0.	131460.	1017.	46851.	0.	9117.	44777.	0.	0.	0.	898.	280860.
MAX KW	20.233	0.000	47.706	0.751	100.254	0.000	4.539	32.536	0.000	0.000	0.000	0.205	189.396
MON/DY	1/ 2	0/ 0	1/ 3	2/12	6/18	0/ 0	4/27	1/ 2	0/ 0	0/ 0	0/ 0	1/ 1	6/18
PEAK ENDUSE	19.715	0.000	39.939	0.000	97.414	0.000	3.848	28.480	0.000	0.000	0.000	0.000	
PEAK PCT	10.4	0.0	21.1	0.0	51.4	0.0	2.0	15.0	0.0	0.0	0.0	0.0	

REPORT- PS-E Energy End-Use Summary for all Fuel Meters WEATHER FILE- NEW YORK LAGUARDI NY

	LIGHTS	TASK LIGHTS	MISC EQUIP	SPACE HEATING	SPACE COOLING	HEAT REJECT	PUMPS & AUX	VENT FANS	REFRIG DISPLAY	HT PUMP SUPPLEM	DOMEST HOT WTR	EXT USAGE	TOTAL
JAN													
MBTU	0.	0.	3.	84.	0.	0.	0.	0.	0.	0.	23.	0.	110.
MAX MBTU/HR	0.0	0.0	0.0	0.7	0.0	0.0	0.0	0.0	0.0	0.0	0.1	0.0	0.7
DAY/HR	0/ 0	0/ 0	2/10	22/ 8	0/ 0	0/ 0	0/ 0	0/ 0	0/ 0	0/ 0	22/13	0/ 0	22/ 8
PEAK ENDUSE	0.0	0.0	0.0	0.7	0.0	0.0	0.0	0.0	0.0	0.0	0.0	0.0	
PEAK PCT	0.0	0.0	0.7	94.5	0.0	0.0	0.0	0.0	0.0	0.0	4.8	0.0	
FEB													
MBTU	0.	0.	3.	84.	0.	0.	0.	0.	0.	0.	22.	0.	109.
MAX MBTU/HR	0.0	0.0	0.0	0.7	0.0	0.0	0.0	0.0	0.0	0.0	0.1	0.0	0.8
DAY/HR	0/ 0	0/ 0	1/10	12/ 8	0/ 0	0/ 0	0/ 0	0/ 0	0/ 0	0/ 0	6/13	0/ 0	12/ 8
PEAK ENDUSE	0.0	0.0	0.0	0.7	0.0	0.0	0.0	0.0	0.0	0.0	0.0	0.0	
PEAK PCT	0.0	0.0	0.6	94.5	0.0	0.0	0.0	0.0	0.0	0.0	4.9	0.0	
MAR													
MBTU	0.	0.	3.	46.	0.	0.	0.	0.	0.	0.	24.	0.	73.
MAX MBTU/HR	0.0	0.0	0.0	0.4	0.0	0.0	0.0	0.0	0.0	0.0	0.1	0.0	0.5
DAY/HR	0/ 0	0/ 0	1/10	5/ 8	0/ 0	0/ 0	0/ 0	0/ 0	0/ 0	0/ 0	9/13	0/ 0	5/ 8
PEAK ENDUSE	0.0	0.0	0.0	0.4	0.0	0.0	0.0	0.0	0.0	0.0	0.0	0.0	
PEAK PCT	0.0	0.0	1.0	91.1	0.0	0.0	0.0	0.0	0.0	0.0	7.9	0.0	
APR													
MBTU	0.	0.	3.	25.	0.	0.	0.	0.	0.	0.	23.	0.	51.
MAX MBTU/HR	0.0	0.0	0.0	0.2	0.0	0.0	0.0	0.0	0.0	0.0	0.1	0.0	0.2
DAY/HR	0/ 0	0/ 0	2/10	13/15	0/ 0	0/ 0	0/ 0	0/ 0	0/ 0	0/ 0	2/13	0/ 0	12/13
PEAK ENDUSE	0.0	0.0	0.0	0.1	0.0	0.0	0.0	0.0	0.0	0.0	0.1	0.0	
PEAK PCT	0.0	0.0	3.0	53.6	0.0	0.0	0.0	0.0	0.0	0.0	43.4	0.0	
MAY													
MBTU	0.	0.	3.	12.	0.	0.	0.	0.	0.	0.	21.	0.	36.
MAX MBTU/HR	0.0	0.0	0.0	0.1	0.0	0.0	0.0	0.0	0.0	0.0	0.1	0.0	0.2
DAY/HR	0/ 0	0/ 0	1/10	4/17	0/ 0	0/ 0	0/ 0	0/ 0	0/ 0	0/ 0	19/13	0/ 0	4/17
PEAK ENDUSE	0.0	0.0	0.0	0.1	0.0	0.0	0.0	0.0	0.0	0.0	0.0	0.0	
PEAK PCT	0.0	0.0	2.5	82.2	0.0	0.0	0.0	0.0	0.0	0.0	15.3	0.0	
JUN													
MBTU	0.	0.	3.	0.	0.	0.	0.	0.	0.	0.	18.	0.	22.
MAX MBTU/HR	0.0	0.0	0.0	0.0	0.0	0.0	0.0	0.0	0.0	0.0	0.1	0.0	0.1
DAY/HR	0/ 0	0/ 0	1/10	0/ 0	0/ 0	0/ 0	0/ 0	0/ 0	0/ 0	0/ 0	6/13	0/ 0	6/13
PEAK ENDUSE	0.0	0.0	0.0	0.0	0.0	0.0	0.0	0.0	0.0	0.0	0.1	0.0	
PEAK PCT	0.0	0.0	7.8	0.0	0.0	0.0	0.0	0.0	0.0	0.0	92.2	0.0	
JUL													
MBTU	0.	0.	3.	0.	0.	0.	0.	0.	0.	0.	17.	0.	21.
MAX MBTU/HR	0.0	0.0	0.0	0.0	0.0	0.0	0.0	0.0	0.0	0.0	0.1	0.0	0.1
DAY/HR	0/ 0	0/ 0	2/10	0/ 0	0/ 0	0/ 0	0/ 0	0/ 0	0/ 0	0/ 0	15/13	0/ 0	18/13
PEAK ENDUSE	0.0	0.0	0.0	0.0	0.0	0.0	0.0	0.0	0.0	0.0	0.1	0.0	
PEAK PCT	0.0	0.0	8.5	0.0	0.0	0.0	0.0	0.0	0.0	0.0	91.5	0.0	
AUG													
MBTU	0.	0.	3.	0.	0.	0.	0.	0.	0.	0.	16.	0.	19.
MAX MBTU/HR	0.0	0.0	0.0	0.0	0.0	0.0	0.0	0.0	0.0	0.0	0.1	0.0	0.1
DAY/HR	0/ 0	0/ 0	1/10	0/ 0	0/ 0	0/ 0	0/ 0	0/ 0	0/ 0	0/ 0	19/13	0/ 0	20/13
PEAK ENDUSE	0.0	0.0	0.0	0.0	0.0	0.0	0.0	0.0	0.0	0.0	0.1	0.0	
PEAK PCT	0.0	0.0	9.0	0.0	0.0	0.0	0.0	0.0	0.0	0.0	91.0	0.0	

REPORT- PS-E Energy End-Use Summary for all Fuel Meters WEATHER FILE- NEW YORK LAGUARDI NY

(CONTINUED)

SEP													
MBTU	0.	0.	3.	0.	0.	0.	0.	0.	0.	0.	16.	0.	19.
MAX MBTU/HR	0.0	0.0	0.0	0.0	0.0	0.0	0.0	0.0	0.0	0.0	0.1	0.0	0.1
DAY/HR	0/ 0	0/ 0	4/10	0/ 0	0/ 0	0/ 0	0/ 0	0/ 0	0/ 0	0/ 0	30/13	0/ 0	14/13
PEAK ENDUSE	0.0	0.0	0.0	0.0	0.0	0.0	0.0	0.0	0.0	0.0	0.1	0.0	
PEAK PCT	0.0	0.0	9.0	0.0	0.0	0.0	0.0	0.0	0.0	0.0	91.0	0.0	
OCT													
MBTU	0.	0.	3.	9.	0.	0.	0.	0.	0.	0.	17.	0.	30.
MAX MBTU/HR	0.0	0.0	0.0	0.2	0.0	0.0	0.0	0.0	0.0	0.0	0.1	0.0	0.2
DAY/HR	0/ 0	0/ 0	1/10	1/ 8	0/ 0	0/ 0	0/ 0	0/ 0	0/ 0	0/ 0	28/13	0/ 0	1/ 8
PEAK ENDUSE	0.0	0.0	0.0	0.2	0.0	0.0	0.0	0.0	0.0	0.0	0.0	0.0	
PEAK PCT	0.0	0.0	2.3	85.2	0.0	0.0	0.0	0.0	0.0	0.0	12.5	0.0	
NOV													
MBTU	0.	0.	3.	29.	0.	0.	0.	0.	0.	0.	18.	0.	50.
MAX MBTU/HR	0.0	0.0	0.0	0.4	0.0	0.0	0.0	0.0	0.0	0.0	0.1	0.0	0.4
DAY/HR	0/ 0	0/ 0	1/10	26/ 8	0/ 0	0/ 0	0/ 0	0/ 0	0/ 0	0/ 0	27/13	0/ 0	26/ 8
PEAK ENDUSE	0.0	0.0	0.0	0.4	0.0	0.0	0.0	0.0	0.0	0.0	0.0	0.0	
PEAK PCT	0.0	0.0	1.1	92.5	0.0	0.0	0.0	0.0	0.0	0.0	6.4	0.0	
DEC													
MBTU	0.	0.	3.	66.	0.	0.	0.	0.	0.	0.	21.	0.	90.
MAX MBTU/HR	0.0	0.0	0.0	0.5	0.0	0.0	0.0	0.0	0.0	0.0	0.1	0.0	0.6
DAY/HR	0/ 0	0/ 0	3/10	3/ 9	0/ 0	0/ 0	0/ 0	0/ 0	0/ 0	0/ 0	6/13	0/ 0	3/ 9
PEAK ENDUSE	0.0	0.0	0.0	0.5	0.0	0.0	0.0	0.0	0.0	0.0	0.0	0.0	
PEAK PCT	0.0	0.0	0.9	94.4	0.0	0.0	0.0	0.0	0.0	0.0	4.7	0.0	
	=======	=======	=======	=======	=======	=======	=======	=======	=======	=======	=======	=======	========
MBTU	0.	0.	38.	355.	0.	0.	0.	0.	0.	0.	236.	0.	629.
MAX MBTU/HR	0.0	0.0	0.0	0.7	0.0	0.0	0.0	0.0	0.0	0.0	0.1	0.0	0.8
MON/DY	0/ 0	0/ 0	1/ 2	2/12	0/ 0	0/ 0	0/ 0	0/ 0	0/ 0	0/ 0	3/ 9	0/ 0	2/12
PEAK ENDUSE	0.0	0.0	0.0	0.7	0.0	0.0	0.0	0.0	0.0	0.0	0.0	0.0	
PEAK PCT	0.0	0.0	0.6	94.5	0.0	0.0	0.0	0.0	0.0	0.0	4.9	0.0	

REPORT- LV-B Summary of Spaces WEATHER FILE- NEW YORK LAGUARDI NY

NUMBER OF SPACES 121 EXTERIOR 97 INTERIOR 24

SPACE	SPACE*FLOOR MULTIPLIER	SPACE TYPE	AZIM	LIGHTS (WATT / SQFT)	PEOPLE	EQUIP (WATT / SQFT)	INFILTRATION METHOD	ACH	AREA (SQFT)	VOLUME (CUFT)
Spaces on floor: Cellar										
STRS C-C	1.0	INT	0.0	0.15	11.4	0.00	AIR-CHANGE	0.15	262.3	2688.6
STRS B-C	1.0	INT	0.0	0.24	1.1	0.00	AIR-CHANGE	0.15	333.4	3417.4
WATER C01	1.0	INT	0.0	0.24	2.8	0.00	AIR-CHANGE	0.15	852.0	8732.8
ELEC C02	1.0	INT	0.0	0.29	2.4	0.00	AIR-CHANGE	0.15	707.6	7253.0
CORR Cellar	1.0	INT	0.0	0.19	4.2	0.00	AIR-CHANGE	0.15	1274.2	13060.8
Spaces on floor: 1st Floor										
STRS A-1	1.0	EXT	0.0	0.48	1.1	0.00	AIR-CHANGE	0.15	336.2	4706.7
CR 102	1.0	EXT	0.0	0.30	41.8	1.52	AIR-CHANGE	0.15	960.8	9608.4
STOR 103	1.0	EXT	0.0	0.39	0.3	0.00	AIR-CHANGE	0.15	86.3	862.8
OFF 104	1.0	EXT	0.0	0.62	3.4	5.30	AIR-CHANGE	0.15	341.6	3416.2
OFF 106	1.0	EXT	0.0	0.62	5.3	5.30	AIR-CHANGE	0.15	526.6	5265.9
V-1	1.0	EXT	0.0	0.49	0.6	0.00	NO-INFILT.	0.00	192.2	1922.3
Caf 108	1.0	EXT	0.0	0.30	130.6	0.25	AIR-CHANGE	0.15	2253.2	22532.1
RR 108	1.0	EXT	0.0	0.30	0.9	0.00	AIR-CHANGE	0.15	263.2	2632.5
CORR-BOH	1.0	EXT	0.0	0.42	1.1	0.00	AIR-CHANGE	0.15	323.0	3230.0
RR 115	1.0	EXT	0.0	0.43	0.3	0.00	AIR-CHANGE	0.15	91.7	917.4
STRS C-1	1.0	EXT	0.0	0.47	0.6	0.00	AIR-CHANGE	0.15	171.5	2400.7
STOR 115	1.0	EXT	0.0	0.58	1.2	0.00	AIR-CHANGE	0.15	372.8	3728.0
KITCH 115	1.0	EXT	0.0	0.50	7.7	7.71	AIR-CHANGE	0.15	1541.4	15413.7
STRS B-1	1.0	EXT	0.0	0.16	0.8	0.00	AIR-CHANGE	0.15	250.8	3511.2
MTNG 109	1.0	EXT	0.0	0.54	2.9	5.30	AIR-CHANGE	0.15	293.0	2930.5
ELEV-1	1.0	EXT	0.0	0.00	0.0	0.00	AIR-CHANGE	0.15	193.5	2709.0
Nurse 107	1.0	EXT	0.0	0.66	5.0	5.30	AIR-CHANGE	0.15	499.2	4992.3
CR 105	1.0	EXT	0.0	0.32	38.9	1.52	AIR-CHANGE	0.15	894.7	8947.4
RRs 101,3,5	1.0	EXT	0.0	0.51	0.8	0.00	AIR-CHANGE	0.15	231.0	2309.9
CR 101	1.0	EXT	0.0	0.30	41.1	1.52	AIR-CHANGE	0.15	945.2	9451.8
CORR-CR	1.0	INT	0.0	0.37	2.1	0.00	AIR-CHANGE	0.15	636.6	6366.5
RR 102,4	1.0	INT	0.0	0.52	0.5	0.00	AIR-CHANGE	0.15	148.8	1487.5
JC 113	1.0	INT	0.0	0.46	0.2	0.00	AIR-CHANGE	0.15	54.8	547.5
STOR 111	1.0	INT	0.0	0.41	0.4	0.00	AIR-CHANGE	0.15	122.4	1224.0
STOR 112	1.0	INT	0.0	0.59	0.5	0.00	AIR-CHANGE	0.15	151.6	1515.9
LCKR 115	1.0	INT	0.0	0.48	0.5	0.00	AIR-CHANGE	0.15	162.2	1622.2
LOBBY	1.0	INT	0.0	1.14	2.1	0.00	AIR-CHANGE	0.15	620.1	6200.6
CORR Elev	1.0	EXT	0.0	0.28	2.3	0.00	AIR-CHANGE	0.15	678.5	6785.0
1st Floor Plenum	1.0	EXT	0.0	0.00	0.0	0.00	NO-INFILT.	0.00	12392.8	49571.0
Spaces on floor: 2nd Floor										
STRS A-2	1.0	EXT	0.0	0.48	0.8	0.00	AIR-CHANGE	0.15	252.5	3282.4
STRS B-2	1.0	EXT	0.0	0.14	1.0	0.00	AIR-CHANGE	0.15	290.4	3775.2
STRS C-2	1.0	EXT	0.0	0.47	0.6	0.00	AIR-CHANGE	0.15	171.5	4458.4
ELEV-2	1.0	EXT	0.0	0.00	0.0	0.00	AIR-CHANGE	0.15	193.5	2515.5

REPORT- LV-B Summary of Spaces WEATHER FILE- NEW YORK LAGUARDI NY

(CONTINUED)

CR 202	1.0	EXT	0.0	0.32	42.3	1.52	AIR-CHANGE	0.15	974.0	9740.5
CR 204	1.0	EXT	0.0	0.32	42.0	1.52	AIR-CHANGE	0.15	965.0	9650.2
CR 206	1.0	EXT	0.0	0.91	16.0	1.52	AIR-CHANGE	0.15	368.5	3684.5
CR 210	1.0	EXT	0.0	0.31	40.0	1.52	AIR-CHANGE	0.15	919.5	9194.8
OFF 216	1.0	EXT	0.0	0.51	0.7	5.30	AIR-CHANGE	0.15	66.3	663.4
GYM 216	1.0	EXT	0.0	0.33	168.8	0.25	AIR-CHANGE	0.15	2911.5	75699.5
STAGE 216	1.0	EXT	0.0	0.57	51.5	0.25	AIR-CHANGE	0.15	888.1	23089.6
RR JC 2	1.0	EXT	0.0	0.40	1.5	0.00	AIR-CHANGE	0.15	453.1	4531.3
CR 201	1.0	EXT	0.0	0.31	33.6	1.52	AIR-CHANGE	0.15	773.7	7736.9
CR 203	1.0	EXT	0.0	0.31	33.7	1.52	AIR-CHANGE	0.15	775.0	7749.9
CR 205	1.0	EXT	0.0	0.32	33.1	1.52	AIR-CHANGE	0.15	760.7	7606.6
STOR 207	1.0	EXT	0.0	0.39	0.6	0.00	AIR-CHANGE	0.15	192.7	1927.5
IDF 209	1.0	INT	0.0	0.49	0.3	7.50	AIR-CHANGE	0.15	101.4	1013.6
RR 211	1.0	INT	0.0	0.58	0.2	0.00	AIR-CHANGE	0.15	67.0	670.0
STOR 212	1.0	INT	0.0	0.56	0.6	0.00	AIR-CHANGE	0.15	188.6	1886.3
RR 208-210	1.0	INT	0.0	0.49	0.5	0.00	AIR-CHANGE	0.15	160.0	1599.6
RR 202 204	1.0	INT	0.0	0.62	0.4	0.00	AIR-CHANGE	0.15	126.1	1261.2
CORR-2	1.0	EXT	0.0	0.33	5.2	0.00	AIR-CHANGE	0.15	1561.8	15618.4
2nd Floor Plenum	1.0	EXT	0.0	0.00	0.0	0.00	NO-INFILT.	0.00	8637.3	25911.8
UC-N 2	1.0	EXT	0.0	0.00	0.0	0.00	NO-INFILT.	0.00	38.0	380.3
UC-E 2	1.0	INT	0.0	0.00	0.0	0.00	NO-INFILT.	0.00	53.3	533.2

Spaces on floor: 3rd Floor

STRS A-3	1.0	EXT	0.0	0.32	0.8	0.00	AIR-CHANGE	0.15	252.5	3282.4
STRS B-3	1.0	EXT	0.0	0.14	1.0	0.00	AIR-CHANGE	0.15	290.4	3775.2
ELEV-3	1.0	EXT	0.0	0.00	0.0	0.00	AIR-CHANGE	0.15	193.5	2515.5
RR JC 3	1.0	EXT	0.0	0.40	1.5	0.00	AIR-CHANGE	0.15	453.1	4531.3
RR 309	1.0	INT	0.0	0.58	0.2	0.00	AIR-CHANGE	0.15	67.0	670.0
CORR-3	1.0	EXT	0.0	0.33	5.2	0.00	AIR-CHANGE	0.15	1561.8	15618.4
CR 302	1.0	EXT	0.0	0.28	33.6	1.52	AIR-CHANGE	0.15	772.5	7725.5
CR 304	1.0	EXT	0.0	0.31	34.0	1.52	AIR-CHANGE	0.15	781.1	7811.1
CR 306	1.0	EXT	0.0	0.31	34.2	1.52	AIR-CHANGE	0.15	786.6	7866.4
EXERCISE 310	1.0	EXT	0.0	0.29	25.4	0.00	AIR-CHANGE	0.15	1268.6	12685.9
OFF 308	1.0	INT	0.0	0.65	1.6	5.30	AIR-CHANGE	0.15	164.1	1640.5
CR 301	1.0	EXT	0.0	0.31	33.6	1.52	AIR-CHANGE	0.15	773.7	7736.9
CR 303	1.0	EXT	0.0	0.31	33.7	1.52	AIR-CHANGE	0.15	775.0	7749.9
CR 305	1.0	EXT	0.0	0.32	33.1	1.52	AIR-CHANGE	0.15	760.7	7606.6
STOR 307	1.0	EXT	0.0	0.41	1.0	0.00	AIR-CHANGE	0.15	303.3	3032.8
UC-N 3	1.0	EXT	0.0	0.00	0.0	0.00	NO-INFILT.	0.00	28.9	288.6
UC-E 3	1.0	INT	0.0	0.00	0.0	0.00	NO-INFILT.	0.00	48.1	481.2
3rd Floor Plenum	1.0	EXT	0.0	0.00	0.0	0.00	NO-INFILT.	0.00	8637.3	25911.8

Spaces on floor: 4th Floor

STRS A-4	1.0	EXT	0.0	0.32	0.8	0.00	AIR-CHANGE	0.15	252.5	3282.4
STRS B-4	1.0	EXT	0.0	0.14	1.0	0.00	AIR-CHANGE	0.15	290.4	3775.2
STRS C-4	1.0	EXT	0.0	0.47	0.6	0.00	AIR-CHANGE	0.15	171.5	2229.2
ELEV-4	1.0	EXT	0.0	0.00	0.0	0.00	AIR-CHANGE	0.15	193.5	2515.5
CR 402	1.0	EXT	0.0	0.28	33.6	1.52	AIR-CHANGE	0.15	772.5	7725.5
CR 404	1.0	EXT	0.0	0.31	34.0	1.52	AIR-CHANGE	0.15	781.1	7811.1
CR 406	1.0	EXT	0.0	0.29	36.5	1.52	AIR-CHANGE	0.15	840.6	8405.6
RR JC 4	1.0	EXT	0.0	0.40	1.5	0.00	AIR-CHANGE	0.15	453.1	4531.3
RR 413	1.0	INT	0.0	0.70	0.2	0.00	AIR-CHANGE	0.15	67.0	670.0
MDF 411	1.0	EXT	0.0	0.33	1.0	7.50	AIR-CHANGE	0.15	303.3	3032.8
CORR-4	1.0	EXT	0.0	0.33	5.2	0.00	AIR-CHANGE	0.15	1561.8	15618.4
PROJECT 408	1.0	EXT	0.0	0.28	12.2	5.30	AIR-CHANGE	0.15	1215.0	12150.4

REPORT- LV-B Summary of Spaces WEATHER FILE- NEW YORK LAGUARDI NY

(CONTINUED)

STOR 410	1.0	EXT	0.0	0.31	0.5	0.00	AIR-CHANGE	0.15	163.7	1636.8
STOR 409	1.0	EXT	0.0	0.31	1.1	0.00	AIR-CHANGE	0.15	325.6	3256.2
OFF 407	1.0	EXT	0.0	0.65	5.5	5.30	AIR-CHANGE	0.15	548.4	5483.5
CR 405	1.0	EXT	0.0	0.58	21.6	1.52	AIR-CHANGE	0.15	496.3	4962.5
WORKRM 403	1.0	EXT	0.0	0.61	4.6	5.30	AIR-CHANGE	0.15	461.1	4610.9
BREAK 401	1.0	EXT	0.0	0.31	4.8	5.30	AIR-CHANGE	0.15	478.0	4780.2
UC-N 4	1.0	EXT	0.0	0.00	0.0	0.00	NO-INFILT.	0.00	28.9	288.6
UC-E 4	1.0	EXT	0.0	0.00	0.0	0.00	NO-INFILT.	0.00	48.1	481.2
4th Floor Plenum	1.0	EXT	0.0	0.00	0.0	0.00	NO-INFILT.	0.00	8637.3	25911.8
Spaces on floor: 5th Floor										
STRS A-5	1.0	EXT	0.0	0.32	0.8	0.00	AIR-CHANGE	0.15	252.5	4039.9
STRS B-5	1.0	EXT	0.0	0.41	1.0	0.00	AIR-CHANGE	0.15	290.4	4646.4
ELEV-5	1.0	EXT	0.0	0.00	0.0	0.00	AIR-CHANGE	0.15	193.5	3096.0
CR 502	1.0	EXT	0.0	0.31	33.6	1.52	AIR-CHANGE	0.15	772.5	7725.5
CR 504	1.0	EXT	0.0	0.31	34.0	1.52	AIR-CHANGE	0.15	781.1	7811.1
CR 506	1.0	EXT	0.0	0.31	34.2	1.52	AIR-CHANGE	0.15	786.6	7866.4
RR JC 5	1.0	EXT	0.0	0.40	1.5	0.00	AIR-CHANGE	0.15	453.1	4531.3
RR 511	1.0	INT	0.0	0.58	0.2	0.00	AIR-CHANGE	0.15	67.0	670.0
STOR 509	1.0	EXT	0.0	0.33	1.0	0.00	AIR-CHANGE	0.15	303.3	3032.8
CR 510	1.0	EXT	0.0	0.53	23.8	1.52	AIR-CHANGE	0.15	547.5	5475.2
CR 508	1.0	EXT	0.0	0.33	38.5	1.52	AIR-CHANGE	0.15	885.1	8851.2
CORR-5	1.0	EXT	0.0	0.33	5.2	0.00	AIR-CHANGE	0.15	1561.8	15618.4
CUSTODIAL 505	1.0	EXT	0.0	0.45	6.7	5.30	AIR-CHANGE	0.15	673.3	6733.4
LOCKR 507	1.0	INT	0.0	0.39	0.7	0.00	AIR-CHANGE	0.15	200.6	2006.4
RESOURCE 503	1.0	EXT	0.0	0.65	4.4	5.30	AIR-CHANGE	0.15	441.5	4415.5
LIB 501	1.0	EXT	0.0	0.68	17.3	1.52	AIR-CHANGE	0.15	993.8	9938.1
UC-N 5	1.0	EXT	0.0	0.00	0.0	0.00	NO-INFILT.	0.00	28.9	288.6
UC-E 5	1.0	EXT	0.0	0.00	0.0	0.00	NO-INFILT.	0.00	48.1	481.2
5th Floor Plenum	1.0	EXT	0.0	0.00	0.0	0.00	NO-INFILT.	0.00	8637.3	51823.6
Spaces on floor: PH Floor										
ELEV-PH	1.0	EXT	0.0	0.21	0.0	0.00	AIR-CHANGE	0.15	324.0	4212.0
MECH	1.0	EXT	0.0	0.26	3.5	0.00	AIR-CHANGE	0.15	1053.8	10537.8
STOR-PH	1.0	EXT	0.0	0.22	0.5	0.00	AIR-CHANGE	0.15	151.6	1516.3
STRS A-PH	1.0	EXT	0.0	0.51	1.0	0.00	AIR-CHANGE	0.15	304.7	3047.4
					---				---	---
BUILDING TOTALS					1400.0				106814.9	858595.7

NUMBER OF EXTERIOR SURFACES 181
(U-VALUE INCLUDES OUTSIDE FILM; WINDOW INCLUDES FRAME AND CURB, IF DEFINED)

SURFACE	- - - W I N D O W S - - - U-VALUE (BTU/HR-SQFT-F)	AREA (SQFT)	- - - - W A L L - - - - U-VALUE (BTU/HR-SQFT-F)	AREA (SQFT)	-W A L L + W I N D O W S- U-VALUE (BTU/HR-SQFT-F)	AREA (SQFT)	AZIMUTH
Exterior Wall 2	0.000	0.00	0.055	506.10	0.055	506.10	NORTH
in space: STRS A-1							
Exterior Wall 18	0.000	0.00	0.052	73.00	0.052	73.00	NORTH
in space: KITCH 115							
Exterior Wall 27	0.000	0.00	0.055	265.50	0.055	265.50	NORTH
in space: CR 101							
Exterior Wall 33	0.000	0.00	0.052	29.20	0.052	29.20	NORTH
in space: 1st Floor Plenum							
Exterior Wall 37	0.000	0.00	0.055	106.20	0.055	106.20	NORTH
in space: 1st Floor Plenum							
Exterior Wall 39	0.000	0.00	0.055	352.95	0.055	352.95	NORTH
in space: STRS A-2							
Exterior Wall 52	0.000	0.00	0.052	189.80	0.052	189.80	NORTH
in space: STAGE 216							
Exterior Wall 56	0.000	0.00	0.055	260.50	0.055	260.50	NORTH
in space: CR 201							
Exterior Wall 60	0.000	0.00	0.055	95.00	0.055	95.00	NORTH
in space: CORR-2							
Exterior Wall 67	0.000	0.00	0.055	106.65	0.055	106.65	NORTH
in space: 2nd Floor Plenum							
Exterior Wall 69	0.000	0.00	0.055	352.95	0.055	352.95	NORTH
in space: STRS A-3							
Exterior Wall 74	0.000	0.00	0.055	95.00	0.055	95.00	NORTH
in space: CORR-3							
Exterior Wall 83	0.000	0.00	0.055	260.50	0.055	260.50	NORTH
in space: CR 301							
Exterior Wall 92	0.000	0.00	0.055	106.65	0.055	106.65	NORTH
in space: 3rd Floor Plenum							
Exterior Wall 102	0.000	0.00	0.055	352.95	0.055	352.95	NORTH
in space: STRS A-4							
Exterior Wall 107	0.000	0.00	0.052	234.65	0.052	234.65	NORTH
in space: STRS C-4							
Exterior Wall 114	0.000	0.00	0.055	95.00	0.055	95.00	NORTH
in space: CORR-4							
Exterior Wall 125	0.000	0.00	0.055	260.50	0.055	260.50	NORTH
in space: BREAK 401							
Exterior Wall 100	0.000	0.00	0.055	106.65	0.055	106.65	NORTH
in space: 4th Floor Plenum							
Exterior Wall 131	0.000	0.00	0.055	434.40	0.055	434.40	NORTH
in space: STRS A-5							
Exterior Wall 143	0.000	0.00	0.055	95.00	0.055	95.00	NORTH
in space: CORR-5							
Exterior Wall 149	0.000	0.00	0.055	260.50	0.055	260.50	NORTH
in space: LIB 501							
Exterior Wall 160	0.000	0.00	0.055	213.30	0.055	213.30	NORTH
in space: 5th Floor Plenum							
Exterior Wall 162	0.000	0.00	0.052	263.25	0.052	263.25	NORTH
in space: ELEV-PH							

REPORT- LV-D Details of Exterior Surfaces WEATHER FILE- NEW YORK LAGUARDI NY

(CONTINUED)

Exterior Wall 168	0.000	0.00	0.055	345.50	0.055	345.50	NORTH
in space: MECH							
Exterior Wall 171	0.000	0.00	0.055	221.00	0.055	221.00	NORTH
in space: STRS A-PH							
Exterior Wall 54	0.397	20.25	0.052	160.25	0.091	180.50	EAST
in space: RR JC 2							
Exterior Wall 55	0.397	101.25	0.052	195.75	0.170	297.00	EAST
in space: CR 201							
Exterior Wall 22	0.000	0.00	0.052	140.00	0.052	140.00	EAST
in space: ELEV-1							
Exterior Wall 57	0.397	101.25	0.052	196.25	0.169	297.50	EAST
in space: CR 203							
Exterior Wall 58	0.397	101.25	0.052	190.75	0.172	292.00	EAST
in space: CR 205							
Exterior Wall 59	0.000	0.00	0.052	88.50	0.052	88.50	EAST
in space: STOR 207							
Exterior Wall 23	0.397	20.25	0.052	213.75	0.082	234.00	EAST
in space: Nurse 107							
Exterior Wall 61	0.397	20.25	0.052	64.75	0.134	85.00	EAST
in space: CORR-2							
Exterior Wall 65	0.000	0.00	0.052	79.65	0.052	79.65	EAST
in space: 2nd Floor Plenum							
Exterior Wall 66	0.000	0.00	0.052	304.20	0.052	304.20	EAST
in space: 2nd Floor Plenum							
Exterior Wall 24	0.397	121.50	0.052	215.50	0.176	337.00	EAST
in space: CR 105							
Exterior Wall 62	0.000	0.00	0.052	39.00	0.052	39.00	EAST
in space: UC-N 2							
Exterior Wall 25	0.000	0.00	0.052	87.00	0.052	87.00	EAST
in space: RRs 101,3,5							
Exterior Wall 70	0.397	9.00	0.052	147.00	0.072	156.00	EAST
in space: STRS B-3							
Exterior Wall 71	0.000	0.00	0.052	130.00	0.052	130.00	EAST
in space: ELEV-3							
Exterior Wall 73	0.397	20.25	0.052	160.25	0.091	180.50	EAST
in space: RR JC 3							
Exterior Wall 26	0.397	121.50	0.052	234.50	0.170	356.00	EAST
in space: CR 101							
Exterior Wall 75	0.397	20.25	0.052	64.75	0.134	85.00	EAST
in space: CORR-3							
Exterior Wall 82	0.397	101.25	0.052	195.75	0.170	297.00	EAST
in space: CR 301							
Exterior Wall 16	0.000	0.00	0.055	116.00	0.055	116.00	EAST
in space: STOR 115							
Exterior Wall 84	0.397	101.25	0.052	196.25	0.169	297.50	EAST
in space: CR 303							
Exterior Wall 85	0.397	101.25	0.052	190.75	0.172	292.00	EAST
in space: CR 305							
Exterior Wall 86	0.000	0.00	0.052	88.50	0.052	88.50	EAST
in space: STOR 307							
Exterior Wall 87	0.000	0.00	0.052	39.00	0.052	39.00	EAST
in space: UC-N 3							
Exterior Wall 90	0.000	0.00	0.052	79.65	0.052	79.65	EAST
in space: 3rd Floor Plenum							
Exterior Wall 91	0.000	0.00	0.052	304.20	0.052	304.20	EAST
in space: 3rd Floor Plenum							
Exterior Wall 28	0.397	20.25	0.052	64.75	0.134	85.00	EAST
in space: CORR Elev							

REPORT- LV-D Details of Exterior Surfaces WEATHER FILE- NEW YORK LAGUARDI NY

(CONTINUED)

Exterior Wall 31	0.000	0.00	0.055	46.40	0.055	46.40	EAST
in space: 1st Floor Plenum							
Exterior Wall 103	0.397	9.00	0.052	147.00	0.072	156.00	EAST
in space: STRS B-4							
Exterior Wall 106	0.000	0.00	0.055	123.50	0.055	123.50	EAST
in space: STRS C-4							
Exterior Wall 32	0.000	0.00	0.055	150.40	0.055	150.40	EAST
in space: 1st Floor Plenum							
Exterior Wall 109	0.000	0.00	0.052	130.00	0.052	130.00	EAST
in space: ELEV-4							
Exterior Wall 129	0.397	20.25	0.052	160.25	0.091	180.50	EAST
in space: RR JC 4							
Exterior Wall 113	0.000	0.00	0.052	88.50	0.052	88.50	EAST
in space: MDF 411							
Exterior Wall 17	0.000	0.00	0.055	376.00	0.055	376.00	EAST
in space: KITCH 115							
Exterior Wall 116	0.397	20.25	0.052	64.75	0.134	85.00	EAST
in space: CORR-4							
Exterior Wall 120	0.000	0.00	0.052	125.00	0.052	125.00	EAST
in space: STOR 409							
Exterior Wall 121	0.397	40.50	0.052	170.00	0.118	210.50	EAST
in space: OFF 407							
Exterior Wall 122	0.397	60.75	0.052	129.75	0.162	190.50	EAST
in space: CR 405							
Exterior Wall 123	0.397	40.50	0.052	136.50	0.131	177.00	EAST
in space: WORKRM 403							
Exterior Wall 124	0.397	81.00	0.052	102.50	0.204	183.50	EAST
in space: BREAK 401							
Exterior Wall 35	0.000	0.00	0.052	106.20	0.052	106.20	EAST
in space: 1st Floor Plenum							
Exterior Wall 126	0.000	0.00	0.052	39.00	0.052	39.00	EAST
in space: UC-N 4							
Exterior Wall 98	0.000	0.00	0.052	79.65	0.052	79.65	EAST
in space: 4th Floor Plenum							
Exterior Wall 99	0.000	0.00	0.052	304.20	0.052	304.20	EAST
in space: 4th Floor Plenum							
Exterior Wall 36	0.000	0.00	0.052	405.60	0.052	405.60	EAST
in space: 1st Floor Plenum							
Exterior Wall 14	0.000	0.00	0.055	133.00	0.055	133.00	EAST
in space: STRS C-1							
Exterior Wall 132	0.000	0.00	0.052	192.00	0.052	192.00	EAST
in space: STRS B-5							
Exterior Wall 134	0.000	0.00	0.052	160.00	0.052	160.00	EAST
in space: ELEV-5							
Exterior Wall 139	0.397	20.25	0.052	160.25	0.091	180.50	EAST
in space: RR JC 5							
Exterior Wall 140	0.000	0.00	0.052	88.50	0.052	88.50	EAST
in space: STOR 509							
Exterior Wall 19	0.397	9.00	0.052	159.00	0.071	168.00	EAST
in space: STRS B-1							
Exterior Wall 145	0.397	20.25	0.052	64.75	0.134	85.00	EAST
in space: CORR-5							
Exterior Wall 146	0.397	101.25	0.052	234.25	0.156	335.50	EAST
in space: CUSTODIAL 505							
Exterior Wall 147	0.397	40.50	0.052	129.00	0.134	169.50	EAST
in space: RESOURCE 503							
Exterior Wall 148	0.397	121.50	0.052	260.00	0.162	381.50	EAST
in space: LIB 501							

REPORT- LV-D Details of Exterior Surfaces WEATHER FILE- NEW YORK LAGUARDI NY

(CONTINUED)

Exterior Wall 40	0.397	9.00	0.052	147.00	0.072	156.00	EAST
in space: STRS B-2							
Exterior Wall 150	0.000	0.00	0.052	39.00	0.052	39.00	EAST
in space: UC-N 5							
Exterior Wall 158	0.000	0.00	0.052	159.30	0.052	159.30	EAST
in space: 5th Floor Plenum							
Exterior Wall 159	0.000	0.00	0.052	608.40	0.052	608.40	EAST
in space: 5th Floor Plenum							
Exterior Wall 42	0.000	0.00	0.055	247.00	0.055	247.00	EAST
in space: STRS C-2							
Exterior Wall 161	0.000	0.00	0.052	208.00	0.052	208.00	EAST
in space: ELEV-PH							
Exterior Wall 43	0.000	0.00	0.052	130.00	0.052	130.00	EAST
in space: ELEV-2							
Exterior Wall 167	0.000	0.00	0.052	305.00	0.052	305.00	EAST
in space: MECH							
Exterior Wall 51	0.000	0.00	0.055	1279.20	0.055	1279.20	EAST
in space: STAGE 216							
Exterior Wall 20	0.397	60.75	0.052	119.75	0.168	180.50	EAST
in space: MTNG 109							
Exterior Wall 97	0.000	0.00	0.052	7.05	0.052	7.05	SOUTH
in space: 4th Floor Plenum							
Exterior Wall 105	0.000	0.00	0.052	234.65	0.052	234.65	SOUTH
in space: STRS C-4							
Exterior Wall 13	0.000	0.00	0.052	252.70	0.052	252.70	SOUTH
in space: STRS C-1							
Exterior Wall 64	0.000	0.00	0.052	7.05	0.052	7.05	SOUTH
in space: 2nd Floor Plenum							
Exterior Wall 11	0.000	0.00	0.052	340.00	0.052	340.00	SOUTH
in space: CORR-BOH							
Exterior Wall 128	0.000	0.00	0.052	23.50	0.052	23.50	SOUTH
in space: RR JC 4							
Exterior Wall 133	0.000	0.00	0.052	387.20	0.052	387.20	SOUTH
in space: STRS B-5							
Exterior Wall 53	0.000	0.00	0.052	23.50	0.052	23.50	SOUTH
in space: RR JC 2							
Exterior Wall 138	0.000	0.00	0.052	23.50	0.052	23.50	SOUTH
in space: RR JC 5							
Exterior Wall 30	0.000	0.00	0.052	198.40	0.052	198.40	SOUTH
in space: 1st Floor Plenum							
Exterior Wall 15	0.000	0.00	0.052	66.50	0.052	66.50	SOUTH
in space: STOR 115							
Exterior Wall 152	0.000	0.00	0.052	151.50	0.052	151.50	SOUTH
in space: CR 510							
Exterior Wall 115	0.000	0.00	0.052	85.00	0.052	85.00	SOUTH
in space: CORR-4							
Exterior Wall 144	0.000	0.00	0.052	85.00	0.052	85.00	SOUTH
in space: CORR-5							
Exterior Wall 12	0.000	0.00	0.052	89.50	0.052	89.50	SOUTH
in space: RR 115							
Exterior Wall 118	0.000	0.00	0.052	98.00	0.052	98.00	SOUTH
in space: PROJECT 408							
Exterior Wall 119	0.000	0.00	0.052	53.50	0.052	53.50	SOUTH
in space: STOR 410							
Exterior Wall 89	0.000	0.00	0.052	7.05	0.052	7.05	SOUTH
in space: 3rd Floor Plenum							
Exterior Wall 41	0.397	50.00	0.052	419.30	0.089	469.30	SOUTH
in space: STRS C-2							

REPORT- LV-D Details of Exterior Surfaces WEATHER FILE- NEW YORK LAGUARDI NY

(CONTINUED)

Exterior Wall 21	0.000	0.00	0.052	23.50	0.052	23.50	SOUTH
in space: MTNG 109							
Exterior Wall 151	0.000	0.00	0.052	125.00	0.052	125.00	SOUTH
in space: UC-E 5							
Exterior Wall 154	0.000	0.00	0.052	90.90	0.052	90.90	SOUTH
in space: 5th Floor Plenum							
Exterior Wall 155	0.000	0.00	0.052	75.00	0.052	75.00	SOUTH
in space: 5th Floor Plenum							
Exterior Wall 156	0.000	0.00	0.052	51.00	0.052	51.00	SOUTH
in space: 5th Floor Plenum							
Exterior Wall 157	0.000	0.00	0.052	14.10	0.052	14.10	SOUTH
in space: 5th Floor Plenum							
Exterior Wall 72	0.000	0.00	0.052	23.50	0.052	23.50	SOUTH
in space: RR JC 3							
Exterior Wall 34	0.000	0.00	0.052	9.40	0.052	9.40	SOUTH
in space: 1st Floor Plenum							
Exterior Wall 50	0.397	125.00	0.052	1164.60	0.085	1289.60	SOUTH
in space: GYM 216							
Exterior Wall 104	0.000	0.00	0.052	314.60	0.052	314.60	SOUTH
in space: STRS B-4							
Exterior Wall 127	0.000	0.00	0.052	125.00	0.052	125.00	SOUTH
in space: UC-E 4							
Exterior Wall 164	0.000	0.00	0.052	263.25	0.052	263.25	SOUTH
in space: ELEV-PH							
Exterior Wall 166	0.000	0.00	0.052	345.50	0.052	345.50	SOUTH
in space: MECH							
Exterior Wall 94	0.000	0.00	0.052	45.45	0.052	45.45	SOUTH
in space: 4th Floor Plenum							
Exterior Wall 95	0.000	0.00	0.052	37.50	0.052	37.50	SOUTH
in space: 4th Floor Plenum							
Exterior Wall 170	0.000	0.00	0.052	146.50	0.052	146.50	SOUTH
in space: STOR-PH							
Exterior Wall 96	0.000	0.00	0.052	25.50	0.052	25.50	SOUTH
in space: 4th Floor Plenum							
Exterior Wall 173	0.000	0.00	0.052	74.50	0.052	74.50	SOUTH
in space: STRS A-PH							
Exterior Wall 7	0.626	122.43	0.052	58.08	0.441	180.50	WEST
in space: V-1							
Exterior Wall 8	0.397	324.00	0.052	517.50	0.185	841.50	WEST
in space: Caf 108							
Exterior Wall 108	0.000	0.00	0.052	123.50	0.052	123.50	WEST
in space: STRS C-4							
Exterior Wall 9	0.000	0.00	0.052	130.00	0.052	130.00	WEST
in space: RR 108							
Exterior Wall 135	0.397	101.25	0.052	195.25	0.170	296.50	WEST
in space: CR 502							
Exterior Wall 136	0.397	101.25	0.052	181.25	0.176	282.50	WEST
in space: CR 504							
Exterior Wall 137	0.397	101.25	0.052	183.25	0.175	284.50	WEST
in space: CR 506							
Exterior Wall 110	0.397	101.25	0.052	195.25	0.170	296.50	WEST
in space: CR 402							
Exterior Wall 111	0.397	101.25	0.052	181.25	0.176	282.50	WEST
in space: CR 404							
Exterior Wall 112	0.397	101.25	0.052	202.75	0.167	304.00	WEST
in space: CR 406							
Exterior Wall 141	0.397	81.00	0.052	140.50	0.178	221.50	WEST
in space: CR 510							

REPORT- LV-D Details of Exterior Surfaces WEATHER FILE- NEW YORK LAGUARDI NY

(CONTINUED)

Exterior Wall 38	0.397	18.00	0.052	102.90	0.103	120.90	WEST
in space: STRS A-2							
Exterior Wall 142	0.397	81.00	0.052	240.50	0.139	321.50	WEST
in space: CR 508							
Exterior Wall 10	0.000	0.00	0.052	95.00	0.052	95.00	WEST
in space: CORR-BOH							
Exterior Wall 76	0.397	101.25	0.052	195.25	0.170	296.50	WEST
in space: CR 302							
Exterior Wall 77	0.397	101.25	0.052	181.25	0.176	282.50	WEST
in space: CR 304							
Exterior Wall 78	0.397	101.25	0.052	183.25	0.175	284.50	WEST
in space: CR 306							
Exterior Wall 79	0.000	0.00	0.052	105.50	0.052	105.50	WEST
in space: EXERCISE 310							
Exterior Wall 117	0.397	162.00	0.052	361.50	0.159	523.50	WEST
in space: PROJECT 408							
Exterior Wall 80	0.397	162.00	0.052	275.50	0.180	437.50	WEST
in space: EXERCISE 310							
Exterior Wall 29	0.000	0.00	0.052	797.40	0.052	797.40	WEST
in space: 1st Floor Plenum							
Exterior Wall 1	0.397	9.00	0.052	121.20	0.076	130.20	WEST
in space: STRS A-1							
Exterior Wall 153	0.000	0.00	0.052	843.90	0.052	843.90	WEST
in space: 5th Floor Plenum							
Exterior Wall 3	0.397	101.25	0.052	246.25	0.152	347.50	WEST
in space: CR 102							
Exterior Wall 4	0.000	0.00	0.052	85.00	0.052	85.00	WEST
in space: STOR 103							
Exterior Wall 44	0.397	121.50	0.052	268.00	0.160	389.50	WEST
in space: CR 202							
Exterior Wall 63	0.000	0.00	0.052	421.95	0.052	421.95	WEST
in space: 2nd Floor Plenum							
Exterior Wall 88	0.000	0.00	0.052	421.95	0.052	421.95	WEST
in space: 3rd Floor Plenum							
Exterior Wall 45	0.397	121.50	0.052	253.00	0.164	374.50	WEST
in space: CR 204							
Exterior Wall 46	0.397	40.50	0.052	120.00	0.139	160.50	WEST
in space: CR 206							
Exterior Wall 93	0.000	0.00	0.052	421.95	0.052	421.95	WEST
in space: 4th Floor Plenum							
Exterior Wall 47	0.397	121.50	0.052	249.00	0.165	370.50	WEST
in space: CR 210							
Exterior Wall 163	0.000	0.00	0.052	208.00	0.052	208.00	WEST
in space: ELEV-PH							
Exterior Wall 48	0.397	40.50	0.052	71.00	0.177	111.50	WEST
in space: OFF 216							
Exterior Wall 165	0.000	0.00	0.052	98.50	0.052	98.50	WEST
in space: MECH							
Exterior Wall 101	0.397	18.00	0.052	102.90	0.103	120.90	WEST
in space: STRS A-4							
Exterior Wall 49	0.397	150.00	0.052	1376.20	0.086	1526.20	WEST
in space: GYM 216							
Exterior Wall 68	0.397	18.00	0.052	102.90	0.103	120.90	WEST
in space: STRS A-3							
Exterior Wall 169	0.000	0.00	0.052	103.50	0.052	103.50	WEST
in space: STOR-PH							
Exterior Wall 5	0.397	60.75	0.052	83.75	0.197	144.50	WEST
in space: OFF 104							

REPORT- LV-D Details of Exterior Surfaces WEATHER FILE- NEW YORK LAGUARDI NY

(CONTINUED)

Exterior Wall 6	0.397	20.25	0.052	149.25	0.093	169.50	WEST
in space: OFF 106							
Exterior Wall 172	0.000	0.00	0.052	103.00	0.052	103.00	WEST
in space: STRS A-PH							
Exterior Wall 130	0.397	18.00	0.052	130.80	0.094	148.80	WEST
in space: STRS A-5							
Exterior Wall 175	0.000	0.00	0.032	2911.52	0.032	2911.52	ROOF
in space: GYM 216							
Exterior Wall 180	0.000	0.00	0.031	1053.77	0.031	1053.77	ROOF
in space: MECH							
Exterior Wall 176	0.000	0.00	0.031	171.48	0.031	171.48	ROOF
in space: STRS C-4							
Exterior Wall 179	0.000	0.00	0.031	324.00	0.031	324.00	ROOF
in space: ELEV-PH							
Exterior Wall 182	0.000	0.00	0.031	151.63	0.031	151.63	ROOF
in space: STOR-PH							
Exterior Wall 178	0.000	0.00	0.031	7249.13	0.031	7249.13	ROOF
in space: 5th Floor Plenum							
Exterior Wall 177	0.000	0.00	0.031	290.40	0.031	290.40	ROOF
in space: STRS B-5							
Exterior Wall 174	0.000	0.00	0.032	888.06	0.032	888.06	ROOF
in space: STAGE 216							
Exterior Wall 181	0.000	0.00	0.031	304.74	0.031	304.74	ROOF
in space: STRS A-PH							
Underground Wall 1	0.000	0.00	0.024	176.30	0.024	176.30	UNDERGRND
in space: STRS C-C							
Underground Wall 2	0.000	0.00	0.024	156.31	0.024	156.31	UNDERGRND
in space: STRS C-C							
Underground Wall 3	0.000	0.00	0.024	176.30	0.024	176.30	UNDERGRND
in space: STRS C-C							
Underground Wall 14	0.000	0.00	0.032	262.30	0.032	262.30	UNDERGRND
in space: STRS C-C							
Underground Wall 4	0.000	0.00	0.024	116.34	0.024	116.34	UNDERGRND
in space: STRS B-C							
Underground Wall 5	0.000	0.00	0.024	300.84	0.024	300.84	UNDERGRND
in space: STRS B-C							
Underground Wall 6	0.000	0.00	0.024	219.35	0.024	219.35	UNDERGRND
in space: STRS B-C							
Underground Wall 15	0.000	0.00	0.032	333.41	0.032	333.41	UNDERGRND
in space: STRS B-C							
Underground Wall 7	0.000	0.00	0.024	317.24	0.024	317.24	UNDERGRND
in space: WATER C01							
Underground Wall 8	0.000	0.00	0.024	282.39	0.024	282.39	UNDERGRND
in space: WATER C01							
Underground Wall 16	0.000	0.00	0.032	851.98	0.032	851.98	UNDERGRND
in space: WATER C01							
Underground Wall 9	0.000	0.00	0.024	234.72	0.024	234.72	UNDERGRND
in space: ELEC C02							
Underground Wall 17	0.000	0.00	0.032	707.61	0.032	707.61	UNDERGRND
in space: ELEC C02							
Underground Wall 10	0.000	0.00	0.024	205.51	0.024	205.51	UNDERGRND
in space: CORR Cellar							
Underground Wall 11	0.000	0.00	0.024	520.70	0.024	520.70	UNDERGRND
in space: CORR Cellar							
Underground Wall 12	0.000	0.00	0.024	121.97	0.024	121.97	UNDERGRND
in space: CORR Cellar							
Underground Wall 13	0.000	0.00	0.024	449.98	0.024	449.98	UNDERGRND
in space: CORR Cellar							
Underground Wall 18	0.000	0.00	0.032	1274.22	0.032	1274.22	UNDERGRND
in space: CORR Cellar							

REPORT- LV-D Details of Exterior Surfaces WEATHER FILE- NEW YORK LAGUARDI NY

(CONTINUED)

SURFACE	- - - W I N D O W S - - - U-VALUE (BTU/HR-SQFT-F)	AREA (SQFT)	- - - - W A L L - - - - U-VALUE (BTU/HR-SQFT-F)	AREA (SQFT)	-W A L L + W I N D O W S- U-VALUE (BTU/HR-SQFT-F)	AREA (SQFT)	AZIMUTH
Underground Wall 21 in space: STRS A-1	0.000	0.00	0.032	336.19	0.032	336.19	UNDERGRND
Underground Wall 22 in space: CR 102	0.000	0.00	0.032	960.84	0.032	960.84	UNDERGRND
Underground Wall 23 in space: STOR 103	0.000	0.00	0.032	86.28	0.032	86.28	UNDERGRND
Underground Wall 24 in space: OFF 104	0.000	0.00	0.032	341.62	0.032	341.62	UNDERGRND
Underground Wall 25 in space: OFF 106	0.000	0.00	0.032	526.59	0.032	526.59	UNDERGRND
Underground Wall 26 in space: V-1	0.000	0.00	0.032	192.23	0.032	192.23	UNDERGRND
Underground Wall 28 in space: Caf 108	0.000	0.00	0.032	2253.21	0.032	2253.21	UNDERGRND
Underground Wall 31 in space: STRS C-1	0.000	0.00	0.032	171.48	0.032	171.48	UNDERGRND
Underground Wall 19 in space: KITCH 115	0.000	0.00	0.032	1541.37	0.032	1541.37	UNDERGRND
Underground Wall 29 in space: MTNG 109	0.000	0.00	0.032	293.05	0.032	293.05	UNDERGRND
Underground Wall 30 in space: ELEV-1	0.000	0.00	0.032	193.50	0.032	193.50	UNDERGRND
Underground Wall 32 in space: Nurse 107	0.000	0.00	0.032	499.23	0.032	499.23	UNDERGRND
Underground Wall 33 in space: CR 105	0.000	0.00	0.032	894.74	0.032	894.74	UNDERGRND
Underground Wall 34 in space: RRs 101,3,5	0.000	0.00	0.032	230.99	0.032	230.99	UNDERGRND
Underground Wall 35 in space: CR 101	0.000	0.00	0.032	945.18	0.032	945.18	UNDERGRND
Underground Wall 36 in space: CORR-CR	0.000	0.00	0.032	636.65	0.032	636.65	UNDERGRND
Underground Wall 37 in space: RR 102,4	0.000	0.00	0.032	148.75	0.032	148.75	UNDERGRND
Underground Wall 38 in space: JC 113	0.000	0.00	0.032	54.75	0.032	54.75	UNDERGRND
Underground Wall 39 in space: STOR 111	0.000	0.00	0.032	122.40	0.032	122.40	UNDERGRND
Underground Wall 20 in space: LCKR 115	0.000	0.00	0.032	162.22	0.032	162.22	UNDERGRND
Underground Wall 41 in space: LCKR 115	0.000	0.00	0.032	162.22	0.032	162.22	UNDERGRND
Underground Wall 40 in space: LOBBY	0.000	0.00	0.032	620.06	0.032	620.06	UNDERGRND
Underground Wall 42 in space: CORR Elev	0.000	0.00	0.032	678.50	0.032	678.50	UNDERGRND

REPORT- LV-D Details of Exterior Surfaces WEATHER FILE- NEW YORK LAGUARDI NY

(CONTINUED)

	AVERAGE U-VALUE/WINDOWS (BTU/HR-SQFT-F)	AVERAGE U-VALUE/WALLS (BTU/HR-SQFT-F)	AVERAGE U-VALUE WALLS+WINDOWS (BTU/HR-SQFT-F)	WINDOW AREA (SQFT)	WALL AREA (SQFT)	WINDOW+WALL AREA (SQFT)
NORTH	0.000	0.055	0.055	0.00	5682.70	5682.70
EAST	0.397	0.053	0.095	1635.75	11695.30	13331.05
SOUTH	0.397	0.052	0.063	175.00	5507.70	5682.70
WEST	0.407	0.052	0.124	2702.43	10628.63	13331.05
ROOF	0.000	0.031	0.031	0.00	13344.72	13344.72
ALL WALLS	0.403	0.053	0.094	4513.17	33514.32	38027.50
WALLS+ROOFS	0.403	0.047	0.078	4513.17	46859.04	51372.21
UNDERGRND	0.000	0.031	0.031	0.00	18759.51	18759.51
BUILDING	0.403	0.042	0.065	4513.17	65618.55	70131.72

NUMBER OF WINDOWS 106

(Note: u-values include outside air film)

WINDOW NAME	MULTIPLIER	GLASS AREA (SQFT)	GLASS HEIGHT (FT)	GLASS WIDTH (FT)	LOCATION OF ORIGIN IN SURFACE COORDINATES X (FT)	Y (FT)	FRAME AREA (SQFT)	CURB AREA (SQFT)	FRAME U-VALUE (BTU/HR-SQFT-F)	CURB U-VALUE (BTU/HR-SQFT-F)
Window 25	1.0	9.00	3.00	3.00	3.20	9.00	0.00	0.00	0.397	0.000
Window 34	1.0	20.25	6.75	3.00	7.25	3.00	0.00	0.00	0.397	0.000
Window 35	1.0	81.00	6.75	12.00	14.50	3.00	0.00	0.00	0.397	0.000
Window 52	1.0	60.75	6.75	9.00	3.50	3.00	0.00	0.00	0.397	0.000
Window 61	1.0	20.25	6.75	3.00	4.50	3.00	0.00	0.00	0.397	0.000
Window 62	1.0	122.43	8.30	14.75	1.00	0.00	0.00	0.00	0.397	0.000
Window 64	1.0	81.00	6.75	12.00	8.00	3.00	0.00	0.00	0.397	0.000
Window 65	1.0	81.00	6.75	12.00	31.00	3.00	0.00	0.00	0.397	0.000
Window 66	1.0	81.00	6.75	12.00	52.00	3.00	0.00	0.00	0.397	0.000
Window 67	1.0	81.00	6.75	12.00	69.00	3.00	0.00	0.00	0.397	0.000
Window 10	1.0	9.00	3.00	3.00	4.50	3.00	0.00	0.00	0.397	0.000
Window 77	1.0	60.75	6.75	9.00	5.00	3.00	0.00	0.00	0.397	0.000
Window 95	1.0	20.25	6.75	3.00	17.50	3.00	0.00	0.00	0.397	0.000
Window 96	1.0	40.50	6.75	6.00	0.50	3.00	0.00	0.00	0.397	0.000
Window 101	1.0	81.00	6.75	12.00	13.00	3.00	0.00	0.00	0.397	0.000
Window 85	1.0	81.00	6.75	12.00	18.00	3.00	0.00	0.00	0.397	0.000
Window 91	1.0	40.50	6.75	6.00	4.25	3.00	0.00	0.00	0.397	0.000
Window 14	1.0	20.25	6.75	3.00	2.70	2.75	0.00	0.00	0.397	0.000
Window 26	1.0	9.00	3.00	3.00	3.20	9.00	0.00	0.00	0.397	0.000
Window 30	1.0	9.00	3.00	3.00	3.20	2.50	0.00	0.00	0.397	0.000
Window 11	1.0	9.00	3.00	3.00	4.50	3.00	0.00	0.00	0.397	0.000
Window 8	1.0	25.00	5.00	5.00	1.00	10.00	0.00	0.00	0.397	0.000
Window 9	1.0	25.00	5.00	5.00	1.00	16.75	0.00	0.00	0.397	0.000
Window 36	1.0	81.00	6.75	12.00	14.50	3.00	0.00	0.00	0.397	0.000
Window 40	1.0	20.25	6.75	3.00	7.25	3.00	0.00	0.00	0.397	0.000
Window 46	1.0	20.25	6.75	3.00	35.50	3.00	0.00	0.00	0.397	0.000
Window 47	1.0	81.00	6.75	12.00	5.00	3.00	0.00	0.00	0.397	0.000
Window 56	1.0	20.25	6.75	3.00	23.50	3.00	0.00	0.00	0.397	0.000
Window 57	1.0	20.25	6.75	3.00	32.75	3.00	0.00	0.00	0.397	0.000
Window 63	1.0	40.50	6.75	6.00	1.50	3.00	0.00	0.00	0.397	0.000
Window 68	1.0	81.00	6.75	12.00	8.00	3.00	0.00	0.00	0.397	0.000
Window 75	1.0	40.50	6.75	6.00	31.00	3.00	0.00	0.00	0.397	0.000
Window 76	1.0	40.50	6.75	6.00	0.00	3.00	0.00	0.00	0.397	0.000
Window 19	1.0	25.00	5.00	5.00	4.00	16.75	0.00	0.00	0.397	0.000
Window 20	1.0	25.00	5.00	5.00	13.00	16.75	0.00	0.00	0.397	0.000
Window 21	1.0	25.00	5.00	5.00	22.00	16.75	0.00	0.00	0.397	0.000
Window 22	1.0	25.00	5.00	5.00	34.00	16.75	0.00	0.00	0.397	0.000
Window 23	1.0	25.00	5.00	5.00	43.00	16.75	0.00	0.00	0.397	0.000
Window 24	1.0	25.00	5.00	5.00	52.00	16.75	0.00	0.00	0.397	0.000
Window 2	1.0	25.00	5.00	5.00	24.25	10.00	0.00	0.00	0.397	0.000
Window 3	1.0	25.00	5.00	5.00	36.00	10.00	0.00	0.00	0.397	0.000
Window 5	1.0	25.00	5.00	5.00	14.25	16.75	0.00	0.00	0.397	0.000
Window 6	1.0	25.00	5.00	5.00	24.25	16.75	0.00	0.00	0.397	0.000
Window 7	1.0	25.00	5.00	5.00	36.00	16.75	0.00	0.00	0.397	0.000
Window 78	1.0	20.25	6.75	3.00	8.00	3.00	0.00	0.00	0.397	0.000
Window 84	1.0	20.25	6.75	3.00	1.00	3.00	0.00	0.00	0.397	0.000
Window 90	1.0	81.00	6.75	12.00	12.00	3.00	0.00	0.00	0.397	0.000
Window 105	1.0	40.50	6.75	6.00	6.00	3.00	0.00	0.00	0.397	0.000
Window 108	1.0	60.75	6.75	9.00	17.00	3.00	0.00	0.00	0.397	0.000

(Note: u-values include outside air film)

WINDOW NAME	MULTIPLIER	GLASS AREA (SQFT)	GLASS HEIGHT (FT)	GLASS WIDTH (FT)	LOCATION OF ORIGIN IN SURFACE COORDINATES X (FT)	Y (FT)	FRAME AREA (SQFT)	CURB AREA (SQFT)	FRAME U-VALUE (BTU/HR-SQFT-F)	CURB U-VALUE (BTU/HR-SQFT-F)
Window 94	1.0	20.25	6.75	3.00	24.00	3.00	0.00	0.00	0.397	0.000
Window 100	1.0	81.00	6.75	12.00	4.75	3.00	0.00	0.00	0.397	0.000
Window 15	1.0	20.25	6.75	3.00	2.70	2.75	0.00	0.00	0.397	0.000
Window 27	1.0	9.00	3.00	3.00	3.20	9.00	0.00	0.00	0.397	0.000
Window 31	1.0	9.00	3.00	3.00	3.20	2.50	0.00	0.00	0.397	0.000
Window 12	1.0	9.00	3.00	3.00	4.50	3.00	0.00	0.00	0.397	0.000
Window 79	1.0	20.25	6.75	3.00	8.00	3.00	0.00	0.00	0.397	0.000
Window 16	1.0	20.25	6.75	3.00	2.70	2.75	0.00	0.00	0.397	0.000
Window 37	1.0	81.00	6.75	12.00	14.50	3.00	0.00	0.00	0.397	0.000
Window 41	1.0	20.25	6.75	3.00	7.25	3.00	0.00	0.00	0.397	0.000
Window 44	1.0	20.25	6.75	3.00	6.00	3.00	0.00	0.00	0.397	0.000
Window 45	1.0	81.00	6.75	12.00	14.00	3.00	0.00	0.00	0.397	0.000
Window 55	1.0	20.25	6.75	3.00	4.50	3.00	0.00	0.00	0.397	0.000
Window 58	1.0	81.00	6.75	12.00	14.00	3.00	0.00	0.00	0.397	0.000
Window 69	1.0	81.00	6.75	12.00	3.50	3.00	0.00	0.00	0.397	0.000
Window 72	1.0	81.00	6.75	12.00	26.50	3.00	0.00	0.00	0.397	0.000
Window 83	1.0	81.00	6.75	12.00	12.00	3.00	0.00	0.00	0.397	0.000
Window 89	1.0	20.25	6.75	3.00	1.00	3.00	0.00	0.00	0.397	0.000
Window 104	1.0	40.50	6.75	6.00	5.50	3.00	0.00	0.00	0.397	0.000
Window 107	1.0	60.75	6.75	9.00	17.00	3.00	0.00	0.00	0.397	0.000
Window 93	1.0	81.00	6.75	12.00	4.75	3.00	0.00	0.00	0.397	0.000
Window 99	1.0	20.25	6.75	3.00	24.00	3.00	0.00	0.00	0.397	0.000
Window 28	1.0	9.00	3.00	3.00	3.20	9.00	0.00	0.00	0.397	0.000
Window 32	1.0	9.00	3.00	3.00	3.20	2.50	0.00	0.00	0.397	0.000
Window 13	1.0	9.00	3.00	3.00	4.50	3.00	0.00	0.00	0.397	0.000
Window 38	1.0	81.00	6.75	12.00	14.50	3.00	0.00	0.00	0.397	0.000
Window 42	1.0	20.25	6.75	3.00	7.25	3.00	0.00	0.00	0.397	0.000
Window 48	1.0	20.25	6.75	3.00	6.00	3.00	0.00	0.00	0.397	0.000
Window 50	1.0	81.00	6.75	12.00	14.00	3.00	0.00	0.00	0.397	0.000
Window 54	1.0	20.25	6.75	3.00	4.50	3.00	0.00	0.00	0.397	0.000
Window 59	1.0	81.00	6.75	12.00	14.00	3.00	0.00	0.00	0.397	0.000
Window 80	1.0	20.25	6.75	3.00	8.00	3.00	0.00	0.00	0.397	0.000
Window 17	1.0	20.25	6.75	3.00	2.70	2.75	0.00	0.00	0.397	0.000
Window 70	1.0	81.00	6.75	12.00	12.25	3.00	0.00	0.00	0.397	0.000
Window 73	1.0	81.00	6.75	12.00	35.25	3.00	0.00	0.00	0.397	0.000
Window 98	1.0	40.50	6.75	6.00	11.00	3.00	0.00	0.00	0.397	0.000
Window 103	1.0	40.50	6.75	6.00	1.50	3.00	0.00	0.00	0.397	0.000
Window 106	1.0	20.25	6.75	3.00	13.00	3.00	0.00	0.00	0.397	0.000
Window 88	1.0	40.50	6.75	6.00	4.00	3.00	0.00	0.00	0.397	0.000
Window 82	1.0	81.00	6.75	12.00	1.00	3.00	0.00	0.00	0.397	0.000
Window 29	1.0	9.00	3.00	3.00	3.20	9.00	0.00	0.00	0.397	0.000
Window 33	1.0	9.00	3.00	3.00	3.20	2.50	0.00	0.00	0.397	0.000
Window 39	1.0	81.00	6.75	12.00	14.50	3.00	0.00	0.00	0.397	0.000
Window 43	1.0	20.25	6.75	3.00	7.25	3.00	0.00	0.00	0.397	0.000
Window 49	1.0	20.25	6.75	3.00	6.00	3.00	0.00	0.00	0.397	0.000
Window 51	1.0	81.00	6.75	12.00	14.00	3.00	0.00	0.00	0.397	0.000
Window 53	1.0	20.25	6.75	3.00	4.50	3.00	0.00	0.00	0.397	0.000
Window 60	1.0	81.00	6.75	12.00	14.00	3.00	0.00	0.00	0.397	0.000
Window 81	1.0	20.25	6.75	3.00	8.00	3.00	0.00	0.00	0.397	0.000
Window 74	1.0	81.00	6.75	12.00	5.00	3.00	0.00	0.00	0.397	0.000
Window 71	1.0	81.00	6.75	12.00	14.25	3.00	0.00	0.00	0.397	0.000
Window 18	1.0	20.25	6.75	3.00	2.70	2.75	0.00	0.00	0.397	0.000

(Note: u-values include outside air film)

WINDOW NAME	MULTIPLIER	GLASS AREA (SQFT)	GLASS HEIGHT (FT)	GLASS WIDTH (FT)	LOCATION OF ORIGIN IN SURFACE COORDINATES X (FT)	Y (FT)	FRAME AREA (SQFT)	CURB AREA (SQFT)	FRAME U-VALUE (BTU/HR-SQFT-F)	CURB U-VALUE (BTU/HR-SQFT-F)
Window 92	1.0	60.75	6.75	9.00	4.75	3.00	0.00	0.00	0.397	0.000
Window 97	1.0	40.50	6.75	6.00	23.50	3.00	0.00	0.00	0.397	0.000
Window 102	1.0	40.50	6.75	6.00	1.50	3.00	0.00	0.00	0.397	0.000
Window 86	1.0	81.00	6.75	12.00	20.50	3.00	0.00	0.00	0.397	0.000
Window 87	1.0	40.50	6.75	6.00	6.00	3.00	0.00	0.00	0.397	0.000

WINDOW NAME	SETBACK (FT)	GLASS SHADING COEFF	NUMBER OF PANES	CENTER-OF-GLASS U-VALUE (BTU/HR-SQFT-F)	GLASS VISIBLE TRANS	GLASS SOLAR TRANS	SURFACE TO ROUGH OPEN AREA RATIO
Window 25	0.25	0.44	1	0.397	0.680	0.878	1.000
Window 34	0.25	0.44	1	0.397	0.680	0.878	1.000
Window 35	0.25	0.44	1	0.397	0.680	0.878	1.000
Window 52	0.25	0.44	1	0.397	0.680	0.878	1.000
Window 61	0.25	0.44	1	0.397	0.680	0.878	1.000
Window 62	0.25	0.46	1	0.626	0.680	0.878	1.000
Window 64	0.25	0.44	1	0.397	0.680	0.878	1.000
Window 65	0.25	0.44	1	0.397	0.680	0.878	1.000
Window 66	0.25	0.44	1	0.397	0.680	0.878	1.000
Window 67	0.25	0.44	1	0.397	0.680	0.878	1.000
Window 10	0.25	0.44	1	0.397	0.680	0.878	1.000
Window 77	0.25	0.44	1	0.397	0.680	0.878	1.000
Window 95	0.25	0.44	1	0.397	0.680	0.878	1.000
Window 96	0.25	0.44	1	0.397	0.680	0.878	1.000
Window 101	0.25	0.44	1	0.397	0.680	0.878	1.000
Window 85	0.25	0.44	1	0.397	0.680	0.878	1.000
Window 91	0.25	0.44	1	0.397	0.680	0.878	1.000
Window 14	0.25	0.44	1	0.397	0.680	0.878	1.000
Window 26	0.25	0.44	1	0.397	0.680	0.878	1.000
Window 30	0.25	0.44	1	0.397	0.680	0.878	1.000
Window 11	0.25	0.44	1	0.397	0.680	0.878	1.000
Window 8	0.25	0.44	1	0.397	0.680	0.878	1.000
Window 9	0.25	0.44	1	0.397	0.680	0.878	1.000
Window 36	0.25	0.44	1	0.397	0.680	0.878	1.000
Window 40	0.25	0.44	1	0.397	0.680	0.878	1.000
Window 46	0.25	0.44	1	0.397	0.680	0.878	1.000
Window 47	0.25	0.44	1	0.397	0.680	0.878	1.000
Window 56	0.25	0.44	1	0.397	0.680	0.878	1.000
Window 57	0.25	0.44	1	0.397	0.680	0.878	1.000
Window 63	0.25	0.44	1	0.397	0.680	0.878	1.000
Window 68	0.25	0.44	1	0.397	0.680	0.878	1.000
Window 75	0.25	0.44	1	0.397	0.680	0.878	1.000
Window 76	0.25	0.44	1	0.397	0.680	0.878	1.000
Window 19	0.25	0.44	1	0.397	0.680	0.878	1.000
Window 20	0.25	0.44	1	0.397	0.680	0.878	1.000
Window 21	0.25	0.44	1	0.397	0.680	0.878	1.000
Window 22	0.25	0.44	1	0.397	0.680	0.878	1.000
Window 23	0.25	0.44	1	0.397	0.680	0.878	1.000
Window 24	0.25	0.44	1	0.397	0.680	0.878	1.000
Window 2	0.25	0.44	1	0.397	0.680	0.878	1.000
Window 3	0.25	0.44	1	0.397	0.680	0.878	1.000

REPORT- LV-H Details of Windows WEATHER FILE- NEW YORK LAGUARDI NY

(CONTINUED)

WINDOW NAME	SETBACK (FT)	GLASS SHADING COEFF	NUMBER OF PANES	CENTER-OF-GLASS U-VALUE (BTU/HR-SQFT-F)	GLASS VISIBLE TRANS	GLASS SOLAR TRANS	SURFACE TO ROUGH OPEN AREA RATIO
Window 5	0.25	0.44	1	0.397	0.680	0.878	1.000
Window 6	0.25	0.44	1	0.397	0.680	0.878	1.000
Window 7	0.25	0.44	1	0.397	0.680	0.878	1.000
Window 78	0.25	0.44	1	0.397	0.680	0.878	1.000
Window 84	0.25	0.44	1	0.397	0.680	0.878	1.000
Window 90	0.25	0.44	1	0.397	0.680	0.878	1.000
Window 105	0.25	0.44	1	0.397	0.680	0.878	1.000
Window 108	0.25	0.44	1	0.397	0.680	0.878	1.000
Window 94	0.25	0.44	1	0.397	0.680	0.878	1.000
Window 100	0.25	0.44	1	0.397	0.680	0.878	1.000
Window 15	0.25	0.44	1	0.397	0.680	0.878	1.000
Window 27	0.25	0.44	1	0.397	0.680	0.878	1.000
Window 31	0.25	0.44	1	0.397	0.680	0.878	1.000
Window 12	0.25	0.44	1	0.397	0.680	0.878	1.000
Window 79	0.25	0.44	1	0.397	0.680	0.878	1.000
Window 16	0.25	0.44	1	0.397	0.680	0.878	1.000
Window 37	0.25	0.44	1	0.397	0.680	0.878	1.000
Window 41	0.25	0.44	1	0.397	0.680	0.878	1.000
Window 44	0.25	0.44	1	0.397	0.680	0.878	1.000
Window 45	0.25	0.44	1	0.397	0.680	0.878	1.000
Window 55	0.25	0.44	1	0.397	0.680	0.878	1.000
Window 58	0.25	0.44	1	0.397	0.680	0.878	1.000
Window 69	0.25	0.44	1	0.397	0.680	0.878	1.000
Window 72	0.25	0.44	1	0.397	0.680	0.878	1.000
Window 83	0.25	0.44	1	0.397	0.680	0.878	1.000
Window 89	0.25	0.44	1	0.397	0.680	0.878	1.000
Window 104	0.25	0.44	1	0.397	0.680	0.878	1.000
Window 107	0.25	0.44	1	0.397	0.680	0.878	1.000
Window 93	0.25	0.44	1	0.397	0.680	0.878	1.000
Window 99	0.25	0.44	1	0.397	0.680	0.878	1.000
Window 28	0.25	0.44	1	0.397	0.680	0.878	1.000
Window 32	0.25	0.44	1	0.397	0.680	0.878	1.000
Window 13	0.25	0.44	1	0.397	0.680	0.878	1.000
Window 38	0.25	0.44	1	0.397	0.680	0.878	1.000
Window 42	0.25	0.44	1	0.397	0.680	0.878	1.000
Window 48	0.25	0.44	1	0.397	0.680	0.878	1.000
Window 50	0.25	0.44	1	0.397	0.680	0.878	1.000
Window 54	0.25	0.44	1	0.397	0.680	0.878	1.000
Window 59	0.25	0.44	1	0.397	0.680	0.878	1.000
Window 80	0.25	0.44	1	0.397	0.680	0.878	1.000
Window 17	0.25	0.44	1	0.397	0.680	0.878	1.000
Window 70	0.25	0.44	1	0.397	0.680	0.878	1.000
Window 73	0.25	0.44	1	0.397	0.680	0.878	1.000
Window 98	0.25	0.44	1	0.397	0.680	0.878	1.000
Window 103	0.25	0.44	1	0.397	0.680	0.878	1.000
Window 106	0.25	0.44	1	0.397	0.680	0.878	1.000
Window 88	0.25	0.44	1	0.397	0.680	0.878	1.000
Window 82	0.25	0.44	1	0.397	0.680	0.878	1.000
Window 29	0.25	0.44	1	0.397	0.680	0.878	1.000
Window 33	0.25	0.44	1	0.397	0.680	0.878	1.000
Window 39	0.25	0.44	1	0.397	0.680	0.878	1.000
Window 43	0.25	0.44	1	0.397	0.680	0.878	1.000
Window 49	0.25	0.44	1	0.397	0.680	0.878	1.000
Window 51	0.25	0.44	1	0.397	0.680	0.878	1.000

REPORT- LV-H Details of Windows WEATHER FILE- NEW YORK LAGUARDI NY

(CONTINUED)

WINDOW NAME	SETBACK (FT)	GLASS SHADING COEFF	NUMBER OF PANES	CENTER-OF-GLASS U-VALUE (BTU/HR-SQFT-F)	GLASS VISIBLE TRANS	GLASS SOLAR TRANS	SURFACE TO ROUGH OPEN AREA RATIO
Window 53	0.25	0.44	1	0.397	0.680	0.878	1.000
Window 60	0.25	0.44	1	0.397	0.680	0.878	1.000
Window 81	0.25	0.44	1	0.397	0.680	0.878	1.000
Window 74	0.25	0.44	1	0.397	0.680	0.878	1.000
Window 71	0.25	0.44	1	0.397	0.680	0.878	1.000
Window 18	0.25	0.44	1	0.397	0.680	0.878	1.000
Window 92	0.25	0.44	1	0.397	0.680	0.878	1.000
Window 97	0.25	0.44	1	0.397	0.680	0.878	1.000
Window 102	0.25	0.44	1	0.397	0.680	0.878	1.000
Window 86	0.25	0.44	1	0.397	0.680	0.878	1.000
Window 87	0.25	0.44	1	0.397	0.680	0.878	1.000

NUMBER OF CONSTRUCTIONS 14 DELAYED 12 QUICK 2

CONSTRUCTION NAME	U-VALUE (BTU/HR-SQFT-F)	SURFACE ABSORPTANCE	SURFACE ROUGHNESS INDEX	SURFACE TYPE	NUMBER OF RESPONSE FACTORS
EW-TYP-GB-CON	0.053	0.70	3	DELAYED	52
EW-TYP-NOGB-CON	0.059	0.70	3	DELAYED	37
EXP-FL-INT-CON	0.075	0.70	3	DELAYED	13
UW-CON	0.024	0.70	3	DELAYED	16
IW-CON	0.518	0.70	3	DELAYED	6
RF-CON	0.032	0.70	3	DELAYED	20
SLOPED-RF-CON	0.032	0.70	3	DELAYED	20
SLAB-ON-GRADE	0.032	0.70	3	DELAYED	7
FL-INT-CON	1.020	0.70	3	DELAYED	4
CL-INT-CON	0.805	0.70	3	DELAYED	4
DR-CON	0.600	0.70	3	QUICK	0
LD-DR-CON	1.500	0.70	3	QUICK	0
Shear Wall	0.056	0.70	3	DELAYED	17
Gym RF	0.032	0.70	3	DELAYED	18

REPORT- SV-A System Design Parameters for HVAC System 1 WEATHER FILE- NEW YORK LAGUARDI NY

SYSTEM TYPE	ALTITUDE FACTOR	FLOOR AREA (SQFT)	MAX PEOPLE	OUTSIDE AIR RATIO	COOLING CAPACITY (KBTU/HR)	SENSIBLE (SHR)	HEATING CAPACITY (KBTU/HR)	COOLING EIR (BTU/BTU)	HEATING EIR (BTU/BTU)	HEAT PUMP SUPP-HEAT (KBTU/HR)
SUM	1.000	46941.8	0.	0.000	0.000	0.000	0.000	0.000	0.000	0.000

ZONE NAME	SUPPLY FLOW (CFM)	EXHAUST FLOW (CFM)	FAN (KW)	MINIMUM FLOW (FRAC)	OUTSIDE AIR FLOW (CFM)	COOLING CAPACITY (KBTU/HR)	SENSIBLE (FRAC)	EXTRACTION RATE (KBTU/HR)	HEATING CAPACITY (KBTU/HR)	ADDITION RATE (KBTU/HR)	ZONE MULT
1st Floor Plenum-z	0.	0.	0.000	0.000	0.	0.00	0.00	0.00	0.00	0.00	1.
2nd Floor Plenum-z	0.	0.	0.000	0.000	0.	0.00	0.00	0.00	0.00	0.00	1.
3rd Floor Plenum-z	0.	0.	0.000	0.000	0.	0.00	0.00	0.00	0.00	0.00	1.
4th Floor Plenum-z	0.	0.	0.000	0.000	0.	0.00	0.00	0.00	0.00	0.00	1.
5th Floor Plenum-z	0.	0.	0.000	0.000	0.	0.00	0.00	0.00	0.00	0.00	1.

REPORT- SV-A System Design Parameters for AHU-1 CLASS-SYS AHU-1 WEATHER FILE- NEW YORK LAGUARDI NY

SYSTEM TYPE	ALTITUDE FACTOR	FLOOR AREA (SQFT)	MAX PEOPLE	OUTSIDE AIR RATIO	COOLING CAPACITY (KBTU/HR)	SENSIBLE (SHR)	HEATING CAPACITY (KBTU/HR)	COOLING EIR (BTU/BTU)	HEATING EIR (BTU/BTU)	HEAT PUMP SUPP-HEAT (KBTU/HR)
VAVS	1.000	16835.5	507.	0.328	707.000	0.747	-451.800	0.000	0.000	0.000

FAN TYPE	CAPACITY (CFM)	DIVERSITY FACTOR (FRAC)	POWER DEMAND (KW)	FAN DELTA-T (F)	STATIC PRESSURE (IN-WATER)	TOTAL EFF (FRAC)	MECH EFF (FRAC)	FAN PLACEMENT	FAN CONTROL	MAX FAN RATIO (FRAC)	MIN FAN RATIO (FRAC)
SUPPLY	19875.	1.00	19.277	3.00	0.0	0.00	0.00	DRAW-THRU	BY USER	1.10	0.30
RETURN	19875.	1.00	13.147	2.04	0.0	0.00	0.00	RETURN	BY USER	1.10	0.30

ZONE NAME	SUPPLY FLOW (CFM)	EXHAUST FLOW (CFM)	FAN (KW)	MINIMUM FLOW (FRAC)	OUTSIDE AIR FLOW (CFM)	COOLING CAPACITY (KBTU/HR)	SENSIBLE (FRAC)	EXTRACTION RATE (KBTU/HR)	HEATING CAPACITY (KBTU/HR)	ADDITION RATE (KBTU/HR)	ZONE MULT
CR 202-z	1381.	0.	0.000	0.306	423.	0.00	0.00	25.73	-26.85	-30.84	1.
CR 204-z	1371.	0.	0.000	0.315	432.	0.00	0.00	25.53	-26.65	-30.61	1.
CR 201-z	1095.	0.	0.000	0.402	440.	0.00	0.00	20.39	-21.28	-24.45	1.
CR 203-z	1079.	0.	0.000	0.397	428.	0.00	0.00	20.10	-20.98	-24.10	1.
RR 202 204-z	12.	0.	0.000	0.001	0.	0.00	0.00	0.35	-0.23	-0.47	1.
									-0.05	(BASEBOARDS)	
CORR-2-z	160.	0.	0.000	0.607	97.	0.00	0.00	3.49	-3.77	-5.15	1.
									-1.58	(BASEBOARDS)	
CR 302-z	1104.	0.	0.000	0.399	440.	0.00	0.00	20.56	-21.46	-24.65	1.
CR 304-z	1116.	0.	0.000	0.395	441.	0.00	0.00	20.79	-21.69	-24.92	1.
CR 301-z	1095.	0.	0.000	0.402	440.	0.00	0.00	20.39	-21.28	-24.45	1.
CR 303-z	1079.	0.	0.000	0.406	438.	0.00	0.00	20.10	-20.98	-24.10	1.
CR 402-z	1104.	0.	0.000	0.400	441.	0.00	0.00	20.56	-21.46	-24.65	1.
CR 404-z	1116.	0.	0.000	0.395	441.	0.00	0.00	20.79	-21.69	-24.92	1.
CR 406-z	1174.	0.	0.000	0.378	444.	0.00	0.00	21.87	-22.82	-26.22	1.
CORR-4-z	206.	0.	0.000	0.510	105.	0.00	0.00	4.49	-4.08	-7.45	1.
									-2.85	(BASEBOARDS)	
WORKRM 403-z	736.	0.	0.000	0.071	52.	0.00	0.00	13.71	-14.31	-16.44	1.
BREAK 401-z	860.	0.	0.000	0.165	142.	0.00	0.00	16.02	-16.72	-19.21	1.
CR 502-z	1108.	0.	0.000	0.398	441.	0.00	0.00	20.65	-21.55	-24.76	1.
CR 504-z	1116.	0.	0.000	0.395	441.	0.00	0.00	20.79	-21.69	-24.92	1.
CUSTODIAL 505-z	1176.	0.	0.000	0.151	178.	0.00	0.00	21.90	-22.86	-26.26	1.
RESOURCE 503-z	713.	0.	0.000	0.069	49.	0.00	0.00	13.28	-13.86	-15.93	1.
LIB 501-z	1075.	0.	0.000	0.196	211.	0.00	0.00	20.03	-20.90	-24.01	1.

REPORT- SV-A System Design Parameters for AHU-4 GYM-SYS WEATHER FILE- NEW YORK LAGUARDI NY

SYSTEM TYPE	ALTITUDE FACTOR	FLOOR AREA (SQFT)	MAX PEOPLE	OUTSIDE AIR RATIO	COOLING CAPACITY (KBTU/HR)	SENSIBLE (SHR)	HEATING CAPACITY (KBTU/HR)	COOLING EIR (BTU/BTU)	HEATING EIR (BTU/BTU)	HEAT PUMP SUPP-HEAT (KBTU/HR)
VAVS	1.000	4107.9	222.	0.266	426.000	0.707	-256.000	0.000	0.000	0.000

FAN TYPE	CAPACITY (CFM)	DIVERSITY FACTOR (FRAC)	POWER DEMAND (KW)	FAN DELTA-T (F)	STATIC PRESSURE (IN-WATER)	TOTAL EFF (FRAC)	MECH EFF (FRAC)	FAN PLACEMENT	FAN CONTROL	MAX FAN RATIO (FRAC)	MIN FAN RATIO (FRAC)
SUPPLY	10100.	1.00	8.787	2.69	0.0	0.00	0.00	DRAW-THRU	BY USER	1.10	0.30
RETURN	9000.	1.00	3.159	1.08	0.0	0.00	0.00	RETURN	BY USER	1.10	0.30

ZONE NAME	SUPPLY FLOW (CFM)	EXHAUST FLOW (CFM)	FAN (KW)	MINIMUM FLOW (FRAC)	OUTSIDE AIR FLOW (CFM)	COOLING CAPACITY (KBTU/HR)	SENSIBLE (FRAC)	EXTRACTION RATE (KBTU/HR)	HEATING CAPACITY (KBTU/HR)	ADDITION RATE (KBTU/HR)	ZONE MULT
OFF 216-z	222.	0.	0.000	0.063	14.	0.00	0.00	4.47	-4.20	-4.43	1.
GYM 216-z	8532.	0.	0.000	0.268	2290.	0.00	0.00	171.73	-161.25	-170.24	1.
STAGE 216-z	1323.	0.	0.000	0.277	367.	0.00	0.00	26.62	-25.00	-27.85	1.
									-1.46	(BASEBOARDS)	
STOR 212-z	23.	0.	0.000	0.602	14.	0.00	0.00	0.47	-0.53	-0.52	1.
									-0.06	(BASEBOARDS)	
UC-E 2-z	0.	0.	0.000	0.000	0.	0.00	0.00	0.00	0.00	0.00	1.

REPORT- SV-A System Design Parameters for AHU-3 K/C-SYS WEATHER FILE- NEW YORK LAGUARDI NY

SYSTEM TYPE	ALTITUDE FACTOR	FLOOR AREA (SQFT)	MAX PEOPLE	OUTSIDE AIR RATIO	COOLING CAPACITY (KBTU/HR)	SENSIBLE (SHR)	HEATING CAPACITY (KBTU/HR)	COOLING EIR (BTU/BTU)	HEATING EIR (BTU/BTU)	HEAT PUMP SUPP-HEAT (KBTU/HR)
VAVS	1.000	4836.2	142.	0.224	347.000	0.660	-186.500	0.000	0.000	0.000

FAN TYPE	CAPACITY (CFM)	DIVERSITY FACTOR (FRAC)	POWER DEMAND (KW)	FAN DELTA-T (F)	STATIC PRESSURE (IN-WATER)	TOTAL EFF (FRAC)	MECH EFF (FRAC)	FAN PLACEMENT	FAN CONTROL	MAX FAN RATIO (FRAC)	MIN FAN RATIO (FRAC)
SUPPLY	7565.	1.00	6.060	2.48	0.0	0.00	0.00	DRAW-THRU	BY USER	1.10	0.30
RETURN	7565.	1.00	3.177	1.30	0.0	0.00	0.00	RETURN	BY USER	1.10	0.30

ZONE NAME	SUPPLY FLOW (CFM)	EXHAUST FLOW (CFM)	FAN (KW)	MINIMUM FLOW (FRAC)	OUTSIDE AIR FLOW (CFM)	COOLING CAPACITY (KBTU/HR)	SENSIBLE (FRAC)	EXTRACTION RATE (KBTU/HR)	HEATING CAPACITY (KBTU/HR)	ADDITION RATE (KBTU/HR)	ZONE MULT
Caf 108-z	3830.	0.	0.000	0.388	1485.	0.00	0.00	81.27	0.00	31.84	1.
									-40.37	(BASEBOARDS)	
RR 108-z	30.	0.	0.000	0.001	0.	0.00	0.00	0.96	0.00	-0.74	1.
									-0.91	(BASEBOARDS)	
RR 115-z	17.	0.	0.000	0.001	0.	0.00	0.00	0.54	0.00	-0.37	1.
									-0.46	(BASEBOARDS)	
STOR 115-z	89.	0.	0.000	0.181	16.	0.00	0.00	1.88	0.00	-0.88	1.
									-1.37	(BASEBOARDS)	
KITCH 115-z	3555.	0.	0.000	0.053	188.	0.00	0.00	86.75	0.00	23.34	1.
									-16.09	(BASEBOARDS)	
STOR 112-z	26.	0.	0.000	0.265	7.	0.00	0.00	0.56	0.00	-0.16	1.
									-0.31	(BASEBOARDS)	
LCKR 115-z	17.	0.	0.000	0.001	0.	0.00	0.00	0.36	0.00	-0.22	1.
									-0.54	(BASEBOARDS)	

REPORT- SV-A System Design Parameters for DATA-SYS WEATHER FILE- NEW YORK LAGUARDI NY

SYSTEM TYPE	ALTITUDE FACTOR	FLOOR AREA (SQFT)	MAX PEOPLE	OUTSIDE AIR RATIO	COOLING CAPACITY (KBTU/HR)	SENSIBLE (SHR)	HEATING CAPACITY (KBTU/HR)	COOLING EIR (BTU/BTU)	HEATING EIR (BTU/BTU)	HEAT PUMP SUPP-HEAT (KBTU/HR)
PTAC	1.000	728.6	1.	0.091	0.000	0.000	0.000	0.346	0.000	0.000

FAN TYPE	CAPACITY (CFM)	DIVERSITY FACTOR (FRAC)	POWER DEMAND (KW)	FAN DELTA-T (F)	STATIC PRESSURE (IN-WATER)	TOTAL EFF (FRAC)	MECH EFF (FRAC)	FAN PLACEMENT	FAN CONTROL	MAX FAN RATIO (FRAC)	MIN FAN RATIO (FRAC)
SUPPLY	479.	0.00	0.001	1.82	2.0	0.40	0.44	BLOW-THRU	2-SPEED	0.00	0.00

ZONE NAME	SUPPLY FLOW (CFM)	EXHAUST FLOW (CFM)	FAN (KW)	MINIMUM FLOW (FRAC)	OUTSIDE AIR FLOW (CFM)	COOLING CAPACITY (KBTU/HR)	SENSIBLE (FRAC)	EXTRACTION RATE (KBTU/HR)	HEATING CAPACITY (KBTU/HR)	ADDITION RATE (KBTU/HR)	ZONE MULT
IDF 209-z	86.	0.	0.050	1.000	6.	3.23	0.62	2.78	0.00	-0.18	1.
MDF 411-z	257.	0.	0.151	1.000	18.	9.68	0.62	8.33	0.00	-0.80	1.
ELEV-PH-z	136.	0.	0.080	1.000	19.	5.43	0.61	4.27	0.00	-4.85	1.

REPORT- SV-A System Design Parameters for HEAT-ONLY-SYS WEATHER FILE- NEW YORK LAGUARDI NY

SYSTEM TYPE	ALTITUDE FACTOR	FLOOR AREA (SQFT)	MAX PEOPLE	OUTSIDE AIR RATIO	COOLING CAPACITY (KBTU/HR)	SENSIBLE (SHR)	HEATING CAPACITY (KBTU/HR)	COOLING EIR (BTU/BTU)	HEATING EIR (BTU/BTU)	HEAT PUMP SUPP-HEAT (KBTU/HR)
UHT	1.000	8621.9	39.	0.000	0.000	0.000	0.000	0.000	0.000	0.000

FAN TYPE	CAPACITY (CFM)	DIVERSITY FACTOR (FRAC)	POWER DEMAND (KW)	FAN DELTA-T (F)	STATIC PRESSURE (IN-WATER)	TOTAL EFF (FRAC)	MECH EFF (FRAC)	FAN PLACEMENT	FAN CONTROL	MAX FAN RATIO (FRAC)	MIN FAN RATIO (FRAC)
SUPPLY	1037.	0.00	0.001	1.82	2.0	0.40	0.44	BLOW-THRU	CONSTANT	0.00	0.00

ZONE NAME	SUPPLY FLOW (CFM)	EXHAUST FLOW (CFM)	FAN (KW)	MINIMUM FLOW (FRAC)	OUTSIDE AIR FLOW (CFM)	COOLING CAPACITY (KBTU/HR)	EXTRACTION SENSIBLE RATE (FRAC)	EXTRACTION RATE (KBTU/HR)	HEATING CAPACITY (KBTU/HR)	ADDITION RATE (KBTU/HR)	ZONE MULT
CORR-BOH-z	38.	0.	0.022	1.000	0.	0.00	0.00	0.00	-3.03	-2.46	1.
CORR Cellar-z	76.	0.	0.045	1.000	0.	0.00	0.00	0.00	-6.09	-5.03	1.
STRS C-C-z	16.	0.	0.009	1.000	0.	0.00	0.00	0.00	-1.25	-1.03	1.
STRS B-C-z	20.	0.	0.012	1.000	0.	0.00	0.00	0.00	-1.59	-1.32	1.
WATER C01-z	51.	0.	0.030	1.000	0.	0.00	0.00	0.00	-4.07	-3.36	1.
ELEC C02-z	42.	0.	0.025	1.000	0.	0.00	0.00	0.00	-3.38	-2.79	1.
STRS A-1-z	66.	0.	0.039	1.000	0.	0.00	0.00	0.00	-5.26	-4.27	1.
STOR 103-z	15.	0.	0.009	1.000	0.	0.00	0.00	0.00	-1.17	-0.95	1.
STRS C-1-z	26.	0.	0.015	1.000	0.	0.00	0.00	0.00	-2.08	-1.70	1.
STRS B-1-z	21.	0.	0.012	1.000	0.	0.00	0.00	0.00	-1.66	-1.35	1.
STRS A-2-z	38.	0.	0.023	1.000	0.	0.00	0.00	0.00	-3.06	-2.49	1.
STRS B-2-z	21.	0.	0.012	1.000	0.	0.00	0.00	0.00	-1.66	-1.35	1.
STRS C-2-z	64.	0.	0.038	1.000	0.	0.00	0.00	0.00	-5.14	-4.18	1.
STRS A-3-z	38.	0.	0.023	1.000	0.	0.00	0.00	0.00	-3.06	-2.49	1.
STRS B-3-z	21.	0.	0.012	1.000	0.	0.00	0.00	0.00	-1.66	-1.35	1.
STRS A-4-z	38.	0.	0.023	1.000	0.	0.00	0.00	0.00	-3.06	-2.49	1.
STRS B-4-z	36.	0.	0.021	1.000	0.	0.00	0.00	0.00	-2.85	-2.32	1.
STRS C-4-z	65.	0.	0.038	1.000	0.	0.00	0.00	0.00	-5.16	-4.20	1.
STRS A-5-z	47.	0.	0.027	1.000	0.	0.00	0.00	0.00	-3.72	-3.02	1.
STRS B-5-z	50.	0.	0.029	1.000	0.	0.00	0.00	0.00	-4.00	-3.25	1.
MECH-z	163.	0.	0.096	1.000	0.	0.00	0.00	0.00	-10.07	-8.44	1.
STOR-PH-z	39.	0.	0.023	1.000	0.	0.00	0.00	0.00	-3.08	-2.51	1.
STRS A-PH-z	45.	0.	0.026	1.000	0.	0.00	0.00	0.00	-3.59	-2.92	1.

REPORT- SV-A System Design Parameters for AHU-2 CLASS SYS WEATHER FILE- NEW YORK LAGUARDI NY

SYSTEM TYPE	ALTITUDE FACTOR	FLOOR AREA (SQFT)	MAX PEOPLE	OUTSIDE AIR RATIO	COOLING CAPACITY (KBTU/HR)	SENSIBLE (SHR)	HEATING CAPACITY (KBTU/HR)	COOLING EIR (BTU/BTU)	HEATING EIR (BTU/BTU)	HEAT PUMP SUPP-HEAT (KBTU/HR)
VAVS	1.000	24742.9	489.	0.334	715.000	0.744	-289.000	0.000	0.000	0.000

FAN TYPE	CAPACITY (CFM)	DIVERSITY FACTOR (FRAC)	POWER DEMAND (KW)	FAN DELTA-T (F)	STATIC PRESSURE (IN-WATER)	TOTAL EFF (FRAC)	MECH EFF (FRAC)	FAN PLACEMENT	FAN CONTROL	MAX FAN RATIO (FRAC)	MIN FAN RATIO (FRAC)
SUPPLY	20320.	1.00	19.865	3.02	0.0	0.00	0.00	DRAW-THRU	BY USER	1.10	0.30
RETURN	20320.	1.00	13.330	2.03	0.0	0.65	0.72	RETURN	BY USER	1.10	0.30

ZONE NAME	SUPPLY FLOW (CFM)	EXHAUST FLOW (CFM)	FAN (KW)	MINIMUM FLOW (FRAC)	OUTSIDE AIR FLOW (CFM)	COOLING CAPACITY (KBTU/HR)	SENSIBLE (FRAC)	EXTRACTION RATE (KBTU/HR)	HEATING CAPACITY (KBTU/HR)	ADDITION RATE (KBTU/HR)	ZONE MULT
CR 102-z	1149.	0.	0.000	0.413	474.	0.00	0.00	20.67	0.00	5.97	1.
									-13.29	(BASEBOARDS)	
OFF 104-z	575.	0.	0.000	0.061	35.	0.00	0.00	10.36	0.00	3.24	1.
									-6.41	(BASEBOARDS)	
OFF 106-z	724.	0.	0.000	0.076	55.	0.00	0.00	13.03	0.00	4.83	1.
									-7.31	(BASEBOARDS)	
V-1-z	318.	0.	0.000	0.009	3.	0.00	0.00	5.73	0.00	-0.62	1.
									-5.95	(BASEBOARDS)	
MTNG 109-z	503.	0.	0.000	0.064	32.	0.00	0.00	9.05	0.00	2.52	1.
									-5.92	(BASEBOARDS)	
Nurse 107-z	693.	0.	0.000	0.059	41.	0.00	0.00	12.48	0.00	4.42	1.
									-7.20	(BASEBOARDS)	
CR 105-z	1108.	0.	0.000	0.375	415.	0.00	0.00	19.94	0.00	5.48	1.
									-13.09	(BASEBOARDS)	
RRs 101,3,5-z	19.	0.	0.000	0.001	0.	0.00	0.00	0.54	0.00	-0.74	1.
									-0.81	(BASEBOARDS)	
CR 101-z	1166.	0.	0.000	0.397	463.	0.00	0.00	20.98	0.00	5.05	1.
									-14.49	(BASEBOARDS)	
CORR-CR-z	43.	0.	0.000	0.898	38.	0.00	0.00	0.77	0.00	-1.35	1.
									-2.06	(BASEBOARDS)	
RR 102,4-z	11.	0.	0.000	0.001	0.	0.00	0.00	0.32	0.00	-0.32	1.
									-0.35	(BASEBOARDS)	
JC 113-z	11.	0.	0.000	0.001	0.	0.00	0.00	0.20	0.00	-0.02	1.
									-0.21	(BASEBOARDS)	
STOR 111-z	14.	0.	0.000	0.898	13.	0.00	0.00	0.26	0.00	-0.27	1.
									-0.32	(BASEBOARDS)	
LOBBY-z	133.	0.	0.000	0.551	73.	0.00	0.00	2.39	0.00	-0.37	1.
									-2.59	(BASEBOARDS)	
CORR Elev-z	68.	0.	0.000	0.598	41.	0.00	0.00	1.44	0.00	-1.65	1.
									-2.79	(BASEBOARDS)	
CR 206-z	543.	0.	0.000	0.409	222.	0.00	0.00	9.78	0.00	3.25	1.
									-5.86	(BASEBOARDS)	
CR 210-z	1308.	0.	0.000	0.310	406.	0.00	0.00	23.54	0.00	7.35	1.
									-14.58	(BASEBOARDS)	
RR JC 2-z	70.	0.	0.000	0.001	0.	0.00	0.00	2.01	0.00	-1.66	1.
									-1.90	(BASEBOARDS)	
CR 205-z	1052.	0.	0.000	0.418	440.	0.00	0.00	18.93	0.00	5.87	1.
									-11.77	(BASEBOARDS)	
STOR 207-z	27.	0.	0.000	0.713	19.	0.00	0.00	0.48	0.00	-0.58	1.
									-0.67	(BASEBOARDS)	
RR 211-z	11.	0.	0.000	0.001	0.	0.00	0.00	0.32	0.00	-0.10	1.

										-0.13	(BASEBOARDS)	
RR 208-210-z	11.	0.	0.000	0.001	0.	0.00	0.00	0.32	0.00	-0.26	1.	
										-0.29	(BASEBOARDS)	
RR JC 3-z	70.	0.	0.000	0.001	0.	0.00	0.00	2.01	0.00	-1.66	1.	
										-1.90	(BASEBOARDS)	
RR 309-z	11.	0.	0.000	0.001	0.	0.00	0.00	0.32	0.00	-0.10	1.	
										-0.13	(BASEBOARDS)	
CORR-3-z	157.	0.	0.000	0.543	85.	0.00	0.00	3.32	0.00	-2.42	1.	
										-5.05	(BASEBOARDS)	
CR 306-z	1107.	0.	0.000	0.398	441.	0.00	0.00	19.93	0.00	6.33	1.	
										-12.24	(BASEBOARDS)	
EXERCISE 310-z	982.	0.	0.000	0.520	511.	0.00	0.00	17.67	0.00	1.20	1.	
										-15.27	(BASEBOARDS)	
OFF 308-z	216.	0.	0.000	0.065	14.	0.00	0.00	3.89	0.00	1.77	1.	
										-1.86	(BASEBOARDS)	
CR 305-z	1052.	0.	0.000	0.419	441.	0.00	0.00	18.93	0.00	5.87	1.	
										-11.77	(BASEBOARDS)	
STOR 307-z	38.	0.	0.000	0.898	34.	0.00	0.00	0.68	0.00	-0.79	1.	
										-0.91	(BASEBOARDS)	
RR JC 4-z	70.	0.	0.000	0.001	0.	0.00	0.00	2.01	0.00	-1.66	1.	
										-1.90	(BASEBOARDS)	
RR 413-z	11.	0.	0.000	0.001	0.	0.00	0.00	0.32	0.00	-0.10	1.	
										-0.13	(BASEBOARDS)	
PROJECT 408-z	2052.	0.	0.000	0.353	724.	0.00	0.00	36.93	0.00	12.35	1.	
										-22.06	(BASEBOARDS)	
STOR 410-z	18.	0.	0.000	0.898	16.	0.00	0.00	0.32	0.00	-0.44	1.	
										-0.50	(BASEBOARDS)	
STOR 409-z	39.	0.	0.000	0.898	35.	0.00	0.00	0.70	0.00	-0.94	1.	
										-1.07	(BASEBOARDS)	
OFF 407-z	848.	0.	0.000	0.088	75.	0.00	0.00	15.26	0.00	5.69	1.	
										-8.53	(BASEBOARDS)	
CR 405-z	696.	0.	0.000	0.379	264.	0.00	0.00	12.54	0.00	4.03	1.	
										-7.65	(BASEBOARDS)	
CR 506-z	1107.	0.	0.000	0.398	441.	0.00	0.00	19.93	0.00	6.33	1.	
										-12.24	(BASEBOARDS)	
RR JC 5-z	70.	0.	0.000	0.001	0.	0.00	0.00	2.01	0.00	-1.66	1.	
										-1.90	(BASEBOARDS)	
RR 511-z	11.	0.	0.000	0.001	0.	0.00	0.00	0.32	0.00	-0.10	1.	
										-0.13	(BASEBOARDS)	
STOR 509-z	38.	0.	0.000	0.898	34.	0.00	0.00	0.68	0.00	-0.79	1.	
										-0.91	(BASEBOARDS)	

REPORT- SV-A System Design Parameters for AHU-2 CLASS SYS WEATHER FILE- NEW YORK LAGUARDI NY

(CONTINUED)

CR 510-z	840.	0.	0.000	0.350	294.	0.00	0.00	15.13	0.00	4.33	1.	
									-9.76	(BASEBOARDS)		
CR 508-z	1151.	0.	0.000	0.440	507.	0.00	0.00	20.72	0.00	6.85	1.	
									-12.46	(BASEBOARDS)		
CORR-5-z	161.	0.	0.000	0.626	101.	0.00	0.00	3.42	0.00	-2.86	1.	
									-5.57	(BASEBOARDS)		
LOCKR 507-z	17.	0.	0.000	0.001	0.	0.00	0.00	0.31	0.00	-0.18	1.	
									-0.48	(BASEBOARDS)		
ELEV-1-z	0.	0.	0.000	0.000	0.	0.00	0.00	0.00	0.00	0.00	1.	
ELEV-2-z	0.	0.	0.000	0.000	0.	0.00	0.00	0.00	0.00	0.00	1.	
UC-N 2-z	0.	0.	0.000	0.000	0.	0.00	0.00	0.00	0.00	0.00	1.	
ELEV-3-z	0.	0.	0.000	0.000	0.	0.00	0.00	0.00	0.00	0.00	1.	
UC-N 3-z	0.	0.	0.000	0.000	0.	0.00	0.00	0.00	0.00	0.00	1.	
UC-E 3-z	0.	0.	0.000	0.000	0.	0.00	0.00	0.00	0.00	0.00	1.	
ELEV-4-z	0.	0.	0.000	0.000	0.	0.00	0.00	0.00	0.00	0.00	1.	
UC-N 4-z	0.	0.	0.000	0.000	0.	0.00	0.00	0.00	0.00	0.00	1.	
UC-E 4-z	0.	0.	0.000	0.000	0.	0.00	0.00	0.00	0.00	0.00	1.	
ELEV-5-z	0.	0.	0.000	0.000	0.	0.00	0.00	0.00	0.00	0.00	1.	
UC-N 5-z	0.	0.	0.000	0.000	0.	0.00	0.00	0.00	0.00	0.00	1.	
UC-E 5-z	0.	0.	0.000	0.000	0.	0.00	0.00	0.00	0.00	0.00	1.	

*** CIRCULATION LOOPS ***

	HEATING CAPACITY (MBTU/HR)	COOLING CAPACITY (MBTU/HR)	LOOP FLOW (GAL/MIN)	TOTAL HEAD (FT)	SUPPLY UA PRODUCT (BTU/HR-F)	SUPPLY LOSS DT (F)	RETURN UA PRODUCT (BTU/HR-F)	RETURN LOSS DT (F)	LOOP VOLUME (GAL)	FLUID HEAT CAPACITY (BTU/LB-F)
CHW-LOOP	0.000	2.218	438.6	51.6	0.0	0.00	0.0	0.00	658.0	1.00
PLANT-HW-LOOP-PRIM	-2.149	0.000	157.1	36.6	0.0	0.00	0.0	0.00	235.7	1.00
DW-LOOP	-0.073	0.000	1.9	6.4	0.0	0.00	0.0	0.00	2.9	1.00
PLANT-HW-LOOP-SEC	-0.972	0.000	78.3	31.6	0.0	0.00	0.0	0.00	117.4	1.00

*** PUMPS ***

ATTACHED TO	FLOW (GAL/MIN)	HEAD (FT)	HEAD SETPOINT (FT)	CAPACITY CONTROL	POWER (KW)	MECHANICAL EFFICIENCY (FRAC)	MOTOR EFFICIENCY (FRAC)
HW-PUMP-PRIM 2 PUMP(s)							
PLANT-HW-LOOP-PRIM	265.9	60.0	32.6	VFD&STAGED	4.460	0.770	0.875
PRIMARY LOOP							
CHW-PUMP 1 PUMP(s)							
CHW-LOOP	438.6	61.9	37.6	VAR-SPEED	7.383	0.770	0.900
PRIMARY LOOP							
DHW-REPUMPS 1 PUMP(s)							
DW-LOOP	25.0	28.0	0.0	VAR-SPEED	0.278	0.625	0.760
PRIMARY LOOP							
HW-PUMP-SEC 2 PUMP(s)							
PLANT-HW-LOOP-SEC	78.3	130.0	32.6	VFD&STAGED	2.767	0.770	0.900
SECONDARY LOOP							

*** PRIMARY EQUIPMENT ***

EQUIPMENT TYPE	ATTACHED TO	RATED CAPACITY (MBTU/HR)	FLOW (GAL/MIN)	RATED EIR (FRAC)	RATED HIR (FRAC)	AUXILIARY (KW)
BLR-1						
HW-CONDENSING	PLANT-HW-LOOP-PRIM	-1.800	131.6	0.003	1.111	0.000
BLR-2						
HW-CONDENSING	PLANT-HW-LOOP-PRIM	-1.800	131.6	0.003	1.111	0.000
Chiller1						
ELEC-SCREW	CHW-LOOP	2.592	541.8	0.335	0.000	0.000

*** DW-HEATERS ***

EQUIPMENT TYPE	ATTACHED TO	CAPACITY (MBTU/HR)	FLOW (GAL/MIN)	EIR (FRAC)	HIR (FRAC)	AUXILIARY (KW)	TANK (GAL)	TANK UA (BTU/HR-F)
DHW-1								
GAS DW-HEATER	DW-LOOP	-0.102	2.7	0.000	1.220	0.000	120.0	6.18